For New Technology Network

NTN®

NTN corporation

Bearing Units

CAT. NO. 2400-Ⅸ/E

Dimension Table

HOUSING ▶ / ▼ BEARING				Page		Page		Page		Page		Page		Page
Set screw type	UC2 F-UC2	400 416	UCP2 UCPL2 UCPG2 F-UCPM2 F-UCPR2 UCIP2 UCIPG2 UCPE2	56 72 76 80 82 84 90 102	UCHP2 UCUP2	92 96			UCF2 UCFG2	112 130	UCFC2 UCFCG2	142 154	UCFL2 UCFLG2 F-UCFM2 F-UCFLR2 UCFE2	156 170 174 176 190
	UC3	406	UCP3 UCPG3 UCIP3 UCIPG3	62 78 86 90					UCF3 UCFG3 UCFS3 UCFSG3	118 132 134 140			UCFL3 UCFLG3	162 172
	UCX	412	UCPX	68					UCFX	124	UCFCX	148	UCFLX	168
	AS2	418	ASPL2 ASPB2	104 100			ASPP2 ASRPP2	108 110					ASFB2 ASFD2	186 188
Eccentric locking collar type	UEL2	426	UELP2 UELPL2	230 240	UELHP2 UELUP2	244 246			UELFU2 UELF2	262 266	UELFC2	282	UELFLU2 UELFL2	286 290
	UEL3	430	UELP3	234					UELF3 UELFS3	270 276			UELFL3	294
	AEL2 JEL2	436 440	AELPL2 JELPL2 AELPB2	248 252 256			AELPP2 AELRPP2	258 260					AELFD2 AELFB2 JELFD2	302 300 303
Adapter type	UK2	448	UKP2	332					UKF2	344	UKFC2	360	UKFL2	368
	UK3	452	UKP3	336					UKF3 UKFS3	348 356			UKFL3	372
	UKX	456	UKPX	340					UKFX	352	UKFCX	364	UKFLX	376
Other bearings					AR2	422	REL2	444	UCS2	460	UCS3	464	ASS2	468

	Page	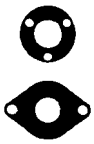	Page		Page		Page		Page	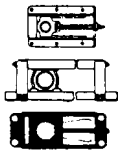	Page
UCFA2 UCFH2	178 182			UCHB2	198	UCT2 UCTG2	202 218	UCC2	222	UCT2 UCL2 UCM2	394 396 397
						UCT3 UCTG3	208 220	UCC3	224	UCM3	398
						UCTX	214	UCCX	227		
		ASPF2 ASRPF2 ASPFL2	192 194 196							ASPT2	229
						UELT2	314	UELC2	324		
						UELT3	318	UELC3	326		
		AELPF2 AELRPF2 AELPFL2 JELPF2 JELPFL2	304 308 310 306 312							AELPT2 JELPT2	330 331
						UKT2	378	UKC2	390		
						UKT3	382	UKC3	391		
						UKTX	386	UKCX	393		
UELS2	472	UELS3	476	AELS2	480	JELS2	484	CS2 CS3	488 489	Farm implement bearings	490

Warranty

NTN warrants, to the original purchaser only, that the delivered product which is the subject of this sale (a) will conform to drawings and specifications mutually established in writing as applicable to the contract, and (b) be free from defects in material or fabrication. The duration of this warranty is one year from date of delivery. If the buyer discovers within this period a failure of the product to conform to drawings or specifications, or a defect in material or fabrication, it must promptly notify **NTN** in writing. In no event shall such notification be received by **NTN** later than 13 months from the date of delivery. Within a reasonable time after such notification, **NTN** will, at its option, (a) correct any failure of the product to conform to drawings, specifications or any defect in material or workmanship, with either replacement or repair of the product, or (b) refund, in part or in whole, the purchase price. Such replacement and repair, excluding charges for labor, is at **NTN**'s expense. All warranty service will be performed at service centers designated by **NTN**. These remedies are the purchaser's exclusive remedies for breach of warranty.

NTN does not warrant (a) any product, components or parts not manufactured by **NTN**, (b) defects caused by failure to provide a suitable installation environment for the product, (c) damage caused by use of the product for purposes other than those for which it was designed, (d) damage caused by disasters such as fire, flood, wind, and lightning, (e) damage caused by unauthorized attachments or modification, (f) damage during shipment, or (g) any other abuse or misuse by the purchaser.

THE FOREGOING WARRANTIES ARE IN LIEU OF ALL OTHER WARRANTIES, EXPRESS OR IMPLIED, INCLUDING BUT NOT LIMITED TO THE IMPLIED WARRANTIES OF MERCHANTABILITY AND FITNESS FOR A PARTICULAR PURPOSE.

In no case shall **NTN** be liable for any special, incidental, or consequential damages based upon breach of warranty, breach of contract, negligence, strict tort, or any other legal theory,and in no case shall total liability of **NTN** exceed the purchase price of the part upon which such liability is based. Such damages include, but are not limited to, loss of profits, loss of savings or revenue, loss of use of the product or any associated equipment, cost of capital, cost of any substitute equipment, facilities or services, downtime, the claims of third parties including customers, and injury to property. Some states do not allow limits on warranties, or on remedies for breach in certain transactions. In such states, the limits in this paragraph and in paragraph (2) shall apply to the extent allowable under case law and statutes in such states.

Any action for breach of warranty or any other legal theory must be commenced within 15 months following delivery of the goods.

Unless modified in a writing signed by both parties, this agreement is understood to be the complete and exclusive agreement between the parties, superceding all prior agreements, oral or written, and all other communications between the parties relating to the subject matter of this agreement. No employee of **NTN** or any other party is authorized to make any warranty in addition to those made in this agreement.

This agreement allocates the risks of product failure between **NTN** and the purchaser. This allocation is recognized by both parties and is reflected in the price of the goods. The purchaser acknowledges that it has read this agreement, understands it, and is bound by its terms.

© **NTN** Corporation. 2007
Although care has been taken to assure the accuracy of the data compiled in this catalog, **NTN** does not assume any liability to any company or person for errors or omissions.

NTN

Bearing Units

Bearing units stainless series

(Stainless bearings + Stainless steel housing)

This new series from **NTN** provides corrosion resistance and longer lubrication life in a clean unit with low torque characteristics.

Guards against corrosion

NTN bearing units in the stainless series feature ball bearings inserted into housings made of stainless that provide superior resistance to corrosion as compared to standard series cast iron units. This series is especially useful in a wide variety of applications because of the rust free properties of the housing.

Longer lubrication life

The solid grease lubricating the bearing has been heat-hardened and is a mixture of lubricant and ultra high moleculer weight polyethylene. The solid grease reduces leakage, prolonging lubricant life especially when used under conditions of vibration or centrifugal force. Also, this grease will not homogenize when water penetrates into the bearing raceway.

Maintains a clean operating environment

The solid grease lubricant in the ball bearing, solely developed by **NTN**, reduces leakage from the bearing, significantly reducing environmental pollution.

Low torque characteristics

The standard solid grease type for these ball bearing units is spot-pack which places the lubricant on the bearing cage. Torque consumption capabilities of spot-pack bearings is low due to reduced whip resistance in comparison to standard grease lubricated ball bearings.

Interchangeability

The basic dimensions are the same as current **NTN** units and are also compatible with units from other manufacturers ISO standard.

Bearing units plastic housing series

(Stainless bearings + Glass fiber reinforced plastic housing)

The **NTN** plastic series ensures a clean operating environment.

Guards against corrosion

NTN bearing units in the plastic series feature ball bearings inserted into housings made of plastics that provide superior resistance to corrosion as compared to standard series cast iron units. This series is especially useful in a wide variety of applications because of the nonmagnetic and rust free properties of the housing.

Maintains a clean operating environment

The solid grease lubricant in the ball bearing, solely developed by **NTN**, reduces leakage from the bearing, significantly reducing environmental pollution. Also, the housing will not stain, nor is there paint to peel and contaminate the environment.

Low torque characteristics

The standard solid grease type for these ball bearing units is spot-pack which places the lubricant on the bearing cage. Torque consumption capabilities of spot-pack bearings is low due to reduced whip resistance in comparison to standard grease lubricated ball bearings.

Light weight

Weight is reduced more than 30% to 60% over standard series units.

Water resistant

The glass filled polyester housing not only reduces corrosion but offers better water resistance.

Bearing units with ductile cast iron housing

(Spheroidal graphite cast iron housing)

The **NTN** ductile series helps with design optimization!

Housing weight is reduced by 40%, with a compact design

When compared with the standard **NTN** housing the ductile series housing enjoys a 40% weight reduction . Additionally the housing is useful for a size reduction in machine equipment. This is achieved by minimizing as much as possible non-critical dimensions of the housing allowing the housing to be placed in tight locations.

High fracture strength of housing

Spheroidal graphite cast iron is used for the bearing housing. It is designed to have high strength with fine material structure and uniformed thickness. The average fracture strength for the series is increased by approximately. 30% when compared with **NTN**'s standard product (FC200, Gray cast iron).

Two lubrication types : Relubricatable type maintenance free type

The relubricatable type is suitable for high temperature and high speed application, and the maintenance free type is optimized for a long period under normal using conditions without re-greasing.

Interchangeability

This series is interchangeable with **NTN** standard product and other domestic suppliers' product. This is achieved by keeping the dimensions related to mounting the same as for standard product made according to JIS B 1559 (Housings for rolling bearing units).

Bearing units steel series

(Rolled steel housing for general structures)

NTN rolled steel housings ensure a safer design

Superior Housing Strength

Made of precision gas cut rolled steel, **NTN** steel housings offer superior strength characteristics when compared to cast iron and cast steel housings.

Consistent Microstructure

The rolled steel microstructure is more consistent than cast iron or cast steel, reducing the risk of housing fracture under severe conditions.

Interchangeability

Rolled steel housing dimensions are consistent with cast units, allowing them to be interchanged with **NTN** standard housings and other manufacturers ISO standard.

Applications

NTN rolled steel housings provide superior strength to cast steel and cast iron. Their ability to resist impact loads makes them suitable for applications involving heavy loads and vibration. Possible applications for **NTN** rolled steel housings include but are not limited to conveyors, trucks and overhead cranes at steel mills, mining machinery and pollution control equipment.

NTN Triple-Sealed Bearings for Bearing Units

These reliable triple-sealed bearings are dustproof and waterproof.
They ensure a longer bearing life even when exposed to heavy airborne dust and splashes of foul water.

1. Construction

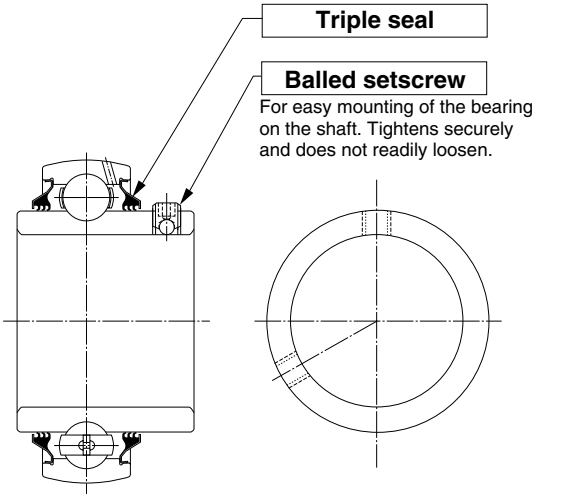

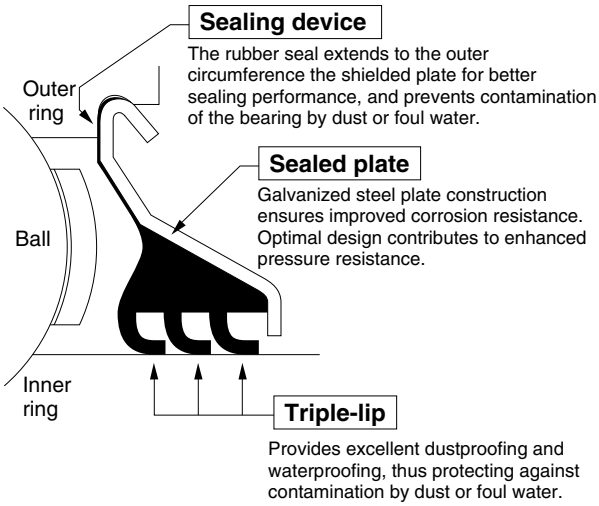

2. Features

Better dustproofing and waterproofing ensure a longer bearing life.

Triple-sealed bearings feature a secure bearing seal with three lips. This special seal offers reliable dustproofing and waterproofing superior to those of standard bearings used in bearing units. In addition, it ensures a longer service life, even when exposed to heavy airborne dust and splashes of foul water. (Patent pending)

Reduces maintenance cost.

A bearing life longer than that of a standard bearing unit configurations means extended maintenance intervals, greatly reduced maintenance costs (of inspection, relubrication, replacement, etc.), and increased availability of machinery.

Decreases price of the bearing unit and contributes to more compact machinery.

The triple-sealed bearing unit replaces conventional covered bearing units in certain operating conditions, greatly decreasing the cost of bearing units. In addition, if the cover is not required, the machinery can be made more compact.

Secure balled setscrew

The triple-sealed bearing is mounted on the shaft with **NTN**'s unique balled setscrew, which features an embedded ball in its tip. Compared with knurled cup point or cup-point setscrews, the balled setscrew provides much greater resistance to loosening, as it does not readily loosen due to vibration or impact.

Interchangeability

The triple-sealed bearing unit conforms to the JIS (Japanese Industrial Standard) for UC-type bearings. It is not only ready to use as a relubricable bearing, but it also replaces the conventional bearing units of NTN and other manufacturers. It therefore serves as a ready replacement for existing bearing units.

3. Allowable Operating Temperature Range and Speed

The triple-sealed bearing can be used in a temperature range of -15˚C to 100˚C.

- Allowable speed

Low-torque triple-sealed bearing unit$\cdots d_n$ value : 36000
High-torque triple-sealed bearing unit$\cdots d_n$ value : 21000

TECHNICAL DATA INDEX

Page

1. Construction ---- 6

2. Design Features and Advantages ---- 7

2.1 Maintenance free type ---- 7
2.2 Relubricatable type ---- 7
2.3 Special sealing feature ---- 7
2.4 Secure fitting ---- 8
2.5 Self-aligning ---- 8
2.6 Higher rated load capacity ---- 8
2.7 Light weight yet strong housing ---- 8
2.8 Easy mounting ---- 8
2.9 Accurate fitting of the housing ---- 8
2.10 Bearing replaceability ---- 8

3. Material ---- 9

3.1 Materials of ball bearings for units ---- 9
3.2 Materials of housings for units ---- 9

4. Bearing unit number code ---- 10

4.1 Bearing unit number code ---- 10
4.2 Ball bearing number code for unit. ---- 10
4.3 Housing number code for unit. ---- 10
4.4 Supplementary code ---- 10

5. Tolerance ---- 17

5.1 Tolerances of ball bearings for the unit ---- 17
5.2 Tolerances of housings ---- 20

6. Basic Load Rating and Life ---- 24

6.1 Bearing life ---- 24
6.2 Basic rating life and basic dynamic load rating ---- 24
6.3 Machine applications and requisite life ---- 26
6.4 Adjusted life rating factor ---- 26
6.5 Basic static load rating ---- 27
6.6 Allowable static equivalent load ---- 27

7. Loads ---- 28

7.1 Load acting on the bearing ---- 28
7.2 Dynamic equivalent radial load ---- 30
7.3 Static equivalent radial load ---- 30

8. Bearing Internal Clearance ---- 31

8.1 Bearing internal clearance ---- 31
8.2 Internal clearance selection ---- 31
8.3 Bearing internal clearance selection standards ---- 32

9. Lubrication ---- 34

9.1 Maximum permissible speed of rotation ---- 34
9.2 Replenishment of grease ---- 35
9.3 Grease fitting ---- 36
9.4 Standard location of the grease fitting ---- 37

10. Shaft Designs ---- 38

10.1 Set screw system bearing units ---- 38
10.2 Eccentric collar system ---- 42
10.3 Adapter system bearing units ---- 42

11. Handling of the Bearing Unit ---- 43

11.1 Mounting of the housing ---- 43
11.2 Mounting the bearing unit on the shaft ---- 46
11.3 Running tests ---- 51
11.4 Inspection during operation ---- 51
11.5 Dismounting the bearing unit ---- 51
11.6 Replacement of the bearing ---- 51

1. Construction

The **NTN** bearing unit is a combination of a radial ball bearing, seal, and a housing of high-grade cast iron or pressed steel, which comes in various shapes.

The outer surface of the bearing and the internal surface of the housing are spherical, so that the unit is self-aligning.

The inside construction of the ball bearing for the unit is such that steel balls and retainers of the same type as in series 62 and 63 of the **NTN** deep groove ball bearing are used. A duplex seal consisting of a combination of an oil-proof synthetic rubber seal and a slinger, unique to **NTN**, is provided on both sides.

Depending on the type, the following methods of fitting to the shaft are employed:

(1) The inner ring is fastened onto the shaft in two places by set screws.

(2) The inner ring has a tapered bore and is fitted to the shaft by means of an adapter.

(3) In the eccentric locking collar system the inner ring is fastened to the shaft by means of eccentric grooves provided at the side of the inner ring and on the collar.

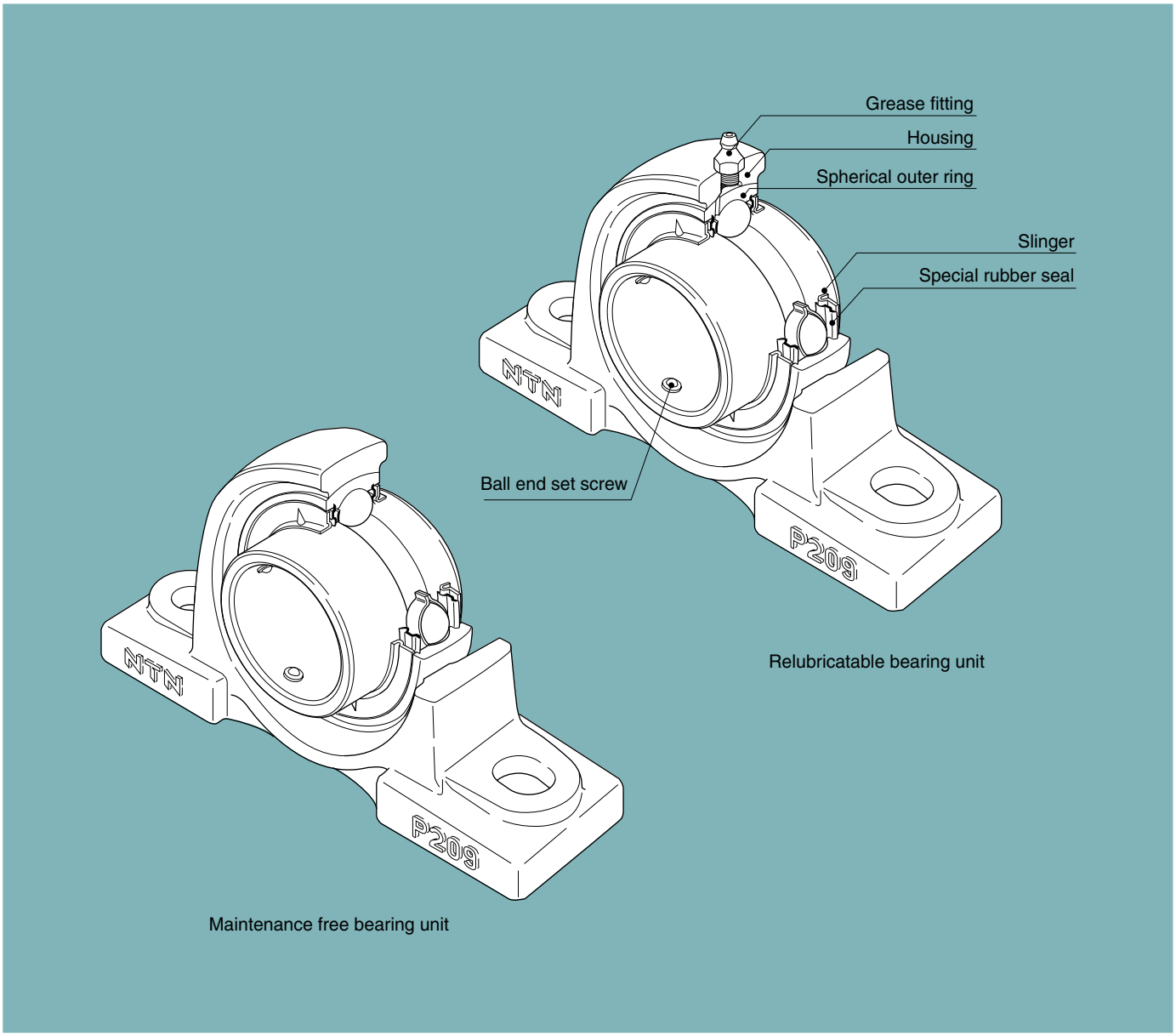

2. Design Features and Advantages

2.1 Maintenance free type

The **NTN** Maintenance free bearing unit contains a high-grade lithium-based grease, good for use over a long period, which is ideally suited to sealed-type bearings. Also provided is an excellent sealing device, unique to **NTN**, which prevents any leakage of grease or penetration of dust and water from outside.

It is designed so that the rotation of the shaft causes the sealed-in grease to circulate through the inside space, effectively providing maximum lubrication. The lubrication effect is maintained over a long period with no need for replenishment of grease.

To summarize the advantages of the **NTN** maintenance free bearing unit:

(1) As an adequate amount of good quality grease is sealed in at the time of manufacture, there is no need for replenishment. This means savings in terms of time and maintenance costs.

(2) Since there is no need for any regreasing facilities, such as piping, a more compact design is possible.

(3) The sealed-in design eliminates the possibility of grease leakage, which could lead to stained products.

2.2 Relubricatable type

The **NTN** relubricatable type bearing unit has an advantage over other simillar units being so designed as to permit regreasing even in the case of misalignment of 2˚ to the right or left. The hole through which the grease fitting is mounted usually causes structural weakening of the housing.

However, as a result of extensive testing, in the **NTN** bearing unit the hole is positioned so as to minimize this adverse effect. In addition, the regreasing groove has been designed to minimize weakening of the housing.

While the **NTN** maintenance free type bearing unit is satisfactory for use under normal operating conditions in-doors, in the following circumstances it is necessary to use the relubricatable type bearing unit:

(1) Cases where the temperature of the bearing rises above 100˚C, 212˚F:
*- Normal temperature of up to 200˚C, 392˚F heatresistant bearing units.

(2) Cases where there is excessive dust, but space does not permit using a bearing unit with a cover.

(3) Cases where the bearing unit is constantly exposed to splashes of water or any other liquid, but space does not permit using a bearing unit with a cover.

(4) Cases in which the humidity is very high, and the machine in which the bearing unit is used is run only intermittently.

(5) Cases involving a heavy load of which the C_r/P_r value is about 10 or below, and the speed is 10 rpm or below, or the movement is oscillatory.

(6) Cases where the number of revolutions is relatively high and the noise problem has to be considered; for example, when the bearing is used with the fan of an air conditioner.

2.3 Special sealing feature

2.3.1 Standard bearing units

The sealing device of the ball bearing for the **NTN** bearing unit is a combination of a heat-resistant and oil-proof synthetic rubber seal and a slinger of an exclusive **NTN** design.

The seal, which is fixed in the outer ring, is steelreinforced, and its lip, in contact with the inner ring, is designed to minimize frictional torque.

The slinger is fixed to the inner ring of the bearing with which it rotates. There is a small clearance between its periphery and the outer ring.

These two types of seals on both sides of the bearing prevent grease leakage, and foreign matter is prevented from entering the bearing from outside.

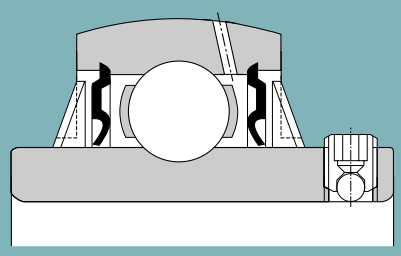

Fig. 2.1

2.3.2 Bearing units with covers

The **NTN** bearing unit with a cover consists of a standard bearing unit and an outside covering for extra protection against dust. Special consideration has been given to its design with respect to dust-proofing.

Sealing devices are provided in both the bearing and the housing, so that units of this type operate satisfactorily even in such adverse environments as flour mills, steel mills, foundries, galvanizing plants and chemical plants, where excessive dust is produced and/or liquids are used. They are also eminently suitable for outdoor environments where dust and rain are inevitable, and in heavy industrial machinery such as construction and transportation equipment.

The rubber seal of the cover contacts with the shaft by its two lips, as shown in Fig. 2.2 and 2.3. By filling the groove between the two lips with grease, an excellent sealing effect is obtained and, at the same time, the contacting portions of the lips are lubricated. Furthermore, the groove is so

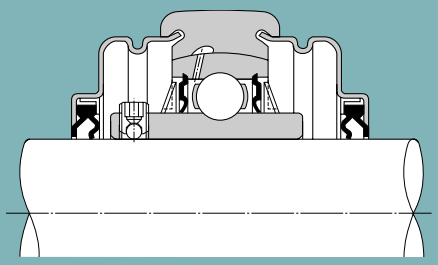

Fig. 2.2 Pressed steel cover

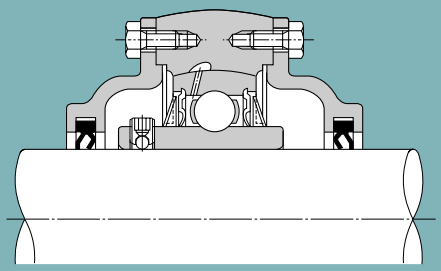

Fig. 2.3 Cast iron cover

designed that when the shaft is inclined the rubber seal can move in the radial direction.

When bearing units are exposed to splashes of water rather than to dust, a drain hole (5 to 8 mm, 0.2 to 0.3 inches in diameter) is provided at the bottom of the cover, and grease should be applied to the side of the bearing itself instead of into the cover.

2.4 Secure fitting

Fastening the bearing to the shaft is effected by tightening the ball-end set screw, situated on the inner ring. This is a unique **NTN** feature which prevents loosening, even if the bearing is subjected to intense vibrations and shocks.

2.5 Self-aligning

With the **NTN** bearing unit, the outer surface of the ball bearing and the inner surface of the housing are spherical, thus this bearing unit has self-aligning characteristic. Any misalignment of axis that may arise from poor workmanship on the shaft or errors in fitting will be properly adjusted.

2.6 Higher rated load capacity

The bearing used in the unit is of the same internal construction as those in **NTN** bearing series 62 and 63, and is capable of accommodating axial load as well as radial load, or composite load. The rated load capacity of this bearing is considerably higher than that of the corresponding self-aligning ball bearings used for standard plummer blocks.

2.7 Light weight yet strong housing

Housings for **NTN** bearing units come in various shapes. They consist of either high-grade cast iron, one-piece casting, or of precision finished pressed steel, the latter being lighter in weight. In either case, they are practically designed to combine lightness with maximum strength.

2.8 Easy mounting

The **NTN** bearing unit is an integrated unit consisting of a bearing and a housing.

As the bearing is prelubricated at manufacture with the correct amount of high-grade lithium base, it can be mounted on the shaft just as it is. It is sufficient to carry out a short test run after mounting.

2.9 Accurate fitting of the housing

In order to simplify the fitting of the pillow block and flange type bearing units, the housings are provided with a seat for a dowel pin, which may be utilized as needed.

2.10 Bearing replaceability

The bearing used in the **NTN** bearing unit is replaceable. In the event of bearing failure, a new bearing can be fitted to the existing housing.

3. Material

3.1 Raceway and rolling element materials

Materials with high hardness and appropriate toughness are used for the inner rings, outer rings and balls of the insert bearings since large compression forces and repetitive stresses are applied to a small contact. In general Cold-rolled steel is used for the cages. For special applications, stainless steel is also available for use in the insert bearings.

3.2 Housing materials

The most common materials used in **NTN** bearing unit housings are cast iron or steel plate, with cast iron being the standard.

For special applications, materials such as spheroidal graphite iron, structural steel, stainless steel cast iron or plastic resin are also available for use in the housings. The chemical resistance properties of glass-fiber reinforced resin are shown in Table 3.1.

3.2.1 Cast iron housing

NTN uses gray cast iron as the standard material for cast iron housings.

Among metallic materials cast iron has a high damping capacity, which is an ideal characteristic for mechanical components. This means cast iron, exhibits superior performance when absorbing vibration, compared with other materials. Additionally cast iron is suitable for high temperatures of up to 300C˚.

3.2.2 Steel plate housing

Cold-rolled steel sheet or hot-rolled mild steel sheet is used for steel plate housings.

Table 3.1 Water and chemical resistance of glass fiber reinforcing resin housing (VALOX 420®)

	Chemicals	Temperature ℃	Deterioration ratio[1] % Number of days soaked 30 days	90 days		Chemicals	Temperature ℃	Deterioration ratio[1] % Number of days soaked 30 days	90 days
Acid	Hydrochloric acid, 10%	23	89	85	Organic solven	Ethyl alcohol	23	99	96
	Sulfuric acid, 36%	23	97	97		Methyl alcohol	23	91	82
		60	84	60		Isopropyl alcohol	23	100	100
	Acetic acid 10%	23	88	88		Acetone	23	86	74
Alkaline	Potassium hydroacid, 5%	23	88	10		Methyl Ethyl Keton	23	90	80
	Sodium hydroacid, 10%	23	※	※		Ethyl acetate	23	96	86
	Ammonia hydroacid, 10%	23	96	87		Methylene chloride	23	54	54
Oil	Motor oil	23	100	100		ethylene grycole	23	100	100
	Brake oil	23	100	100	Sodium	Zinc chrolide 10%	23	97	94
	Gasoline (Regular)	23	100	100		Calcium chrolide 10%	23	98	98
		60	93	90		Sodium chrolide 5%	23	97	97

Remarks 1) Deterioration (%) is the strength after test divided by the strength before test.
The ※ symbol indicates that results could not be measured as the test piece dissolved.
Remarks 2) The values listed in the table are not guaranteed as they are the result of soaking without operating stresses on the sample. Because this strength data is general, it does not apply under all operating conditions. Actual housing strength will vary depending on the type and concentration of liquid, temperature, load, etc.
Remarks 3) Technical data provided by General Electric Company.

Among engineering plastics, VALOX has better water absorption characteristics (0.06% at 23˚C over 24 hours) and better dimensional stability. VALOX is made of crystallized polymer and while not affected by organic solvents, is affected by alkaline, making it important to consider the operating environment. The table demonstrates VALOX's chemical resistance when soaked in solvent at 30 or 90 days.

Table 3.2 Anti-Corrosion capability

◎ ○ △ ▲ ×
NTN recommends ratings of ◎ to ○ for optimum corrosion resistance. excellent ← → poor

Materials \ Condition	Atmosphere		Water		Acid		
	Dry	Wet	Natural water	Sodium water	Nitric acid	Sulfuric acid	Hydrochloric acid
Martensite stainless steel SUS440C, SUS410	○	△	△	▲	▲	×	×
Austenite stainless steel SUS304, SCS13	◎	◎	◎	○	◎	○	△
Polyester plastics VALOX 420	◎	◎	◎	◎	▲	○	○
Polypropylene, polyethylene	◎	◎	◎	◎	○	○	○
High carbon steel SUJ2	△	▲	▲	×	×	×	×
Carbon steel, Cast iron	▲	×	×	×	×	×	×

Remarks: This data is obtained by observation of the surface conditions of materials.
Note that these anti-corrosion capabilities are altered by anti-corrosion surface treatment.
Not recommended for use in liquid.

4. Bearing unit part numbering

4.1 Bearing unit part numbering

NTN Bearing unit part numbers are in accordance with the Japanese Industrial Standard JIS. The code for the bearing type, housing type, diameter series and bore diameter are expressed from left to right within the part number.

Example 1

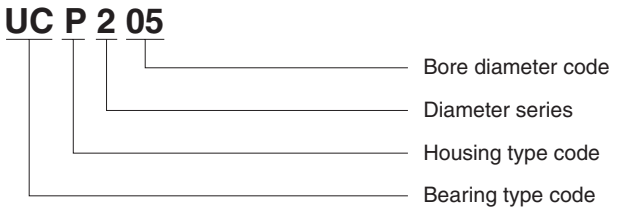

Example 2

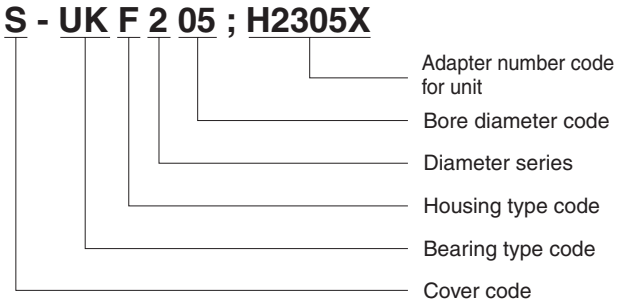

4.2 Ball bearing insert part numbering

The part number for the insert bearing matches the part number for the bearing unit.

Example

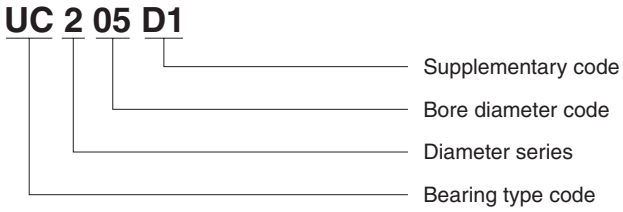

Each bearing unit can take any number of different ball bearing inserts. The available insert types are shown in Fig. 4.3(1)-4.3(9).

4.3 Housing part numbering

Housing part numbers are expressed by the housing type code, the bearing outer diameter series code and the bore diameter codes of the insert bearing that would be used for the unit.

The available housings are shown in Table 4.3(1)-4.3(9).

Example

4.4 Supplemental codes

Typical supplementary codes added after the Bearing unit part number are shown below.

Table 4.1 Examples of supplementary codes

Item	Supplementary code	Content
For heat resistance and cold resistance	HT2	Heat resistance
	CT1	Cold resistance
Housing material	N1	Spheroidal graphite cast iron (FCD450)
Lubrication method	No code	Maintenance free type
	D1	Relubricatable type
Bearing seal	No code	Standard nitrile rubber seal
	U	Non-contact shield plate
	LLJ	Triple lip seal
Set screw	No code	Set screw with ball (Except for stainless bearing)
	W3	Cup point
	W4	Double point
	W5	Round head dog point set screw (With one piece)
	W6	Round head key bolt (With one piece)

Example 1

Example 2

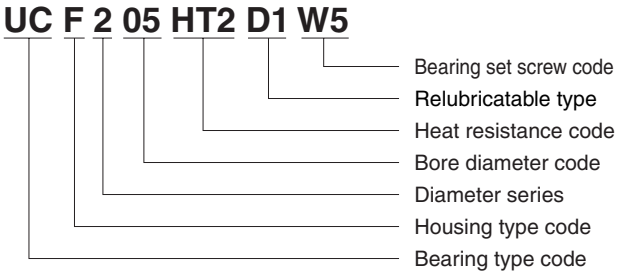

Bearing specifications for heat resistance and cold resistance are shown in Table 4.2.

Table 4.2 Bearing specifications for heat resistance and cold resistance

Item	Code	Operating range (˚C)	Grease	Bearing seal	Bearing clearance
Heat resistance	HT2	Room temp. ～180˚C	Li soap+ Silicon oil	Non-contact shield plate	C4
Cold resistance	CT1	−60˚C ～Room temp.	Li soap+ Silicon oil	Non-contact shield plate	CN

Table 4.3 (1) Cast iron pillow block type units

Housing Type Material : Cast Iron		Cover	Bearing Type					
			UC	UEL REL	UK	AS AR	AEL JEL	CS
Pillow Block		–	UCP	UELP RELP	UKP	ASP ARP	AELP JELP	–
		Steel	S(M)-UCP	–	S(M)-UKP	S(M)-ASP S(M)-ARP	–	–
		Cast Iron	C(M)-UCP	–	C(M)-UKP	C(M)-ASP C(M)-ARP	–	–
Thick Pillow Block		–	UCIP	UELIP RELIP	UKIP	–	–	–
		Steel	S(M)-UCIP	–	S(M)-UKIP	–	–	–
		Cast Iron	C(M)-UCIP	–	C(M)-UKIP	–	–	–
High-Center Pillow Block		–	UCHP	UELHP RELHP	UKHP	ASHP ARHP	AELHP JELHP	–
		Steel	S(M)-UCHP	–	S(M)-UKHP	S(M)-ASHP S(M)-ARHP	–	–
Narrow Pillow Block		–	UCUP	UELUP RELUP	UKUP	ASUP ARUP	AELUP JELUP	–
		Steel	S(M)-UCUP	–	S(M)-UKUP	S(M)-ASUP S(M)-ARUP	–	–
Light Pillow Block		–	–	–	–	ASPB ARPB	AELPB JELPB	CSPB
Pillow Block Low-Center		–	UCPL	UELPL RELPL	UKPL	ASPL ARPL	AELPL JELPL	–

Remarks 1. The codes "S-" and "C-" at the head of the type codes indicate steel plate covered bearing units and cast iron covered bearing units, respectively.
2. Single-sided closed covered bearing units made of steel and cast iron are also available.
These bearing units are identified with the codes "SM-"(steel plate) and "CM-"(cast iron) at the head of the type codes, respectively.
3. "UC" type stainless steel bearings are also available. For further details, consult **NTN** (Stainless Series Bearing unit)

Table 4.3 (2) Cast iron flange type units

Housing Type Material : Cast Iron		Cover	Bearing Type					
			UC	UEL REL	UK	AS AR	AEL JEL	CS
Square Flange		–	UCF	UELF RELF	UKF	ASF ARF	AELF JELF	–
		Steel	S(M)-UCF	–	S(M)-UKF	S(M)-ASF S(M)-ARF	–	–
		Cast Iron	C(M)-UCF	–	C(M)-UKF	C(M)-ASF C(M)-ARF	–	–
Square Flange W/Spigot Joint		–	UCFS	UELFS	UKFS	–	–	–
		Cast Iron	C(M)-UCFS	–	C(M)-UKFS	–	–	–
Round Flange W/Spigot Joint		–	UCFC	UELFC RELFC	UKFC	ASFC ARFC	AELFC JELFC	–
		Steel	S(M)-UCFC	–	S(M)-UKFC	S(M)-ASFC S(M)-ARFC	–	–
		Cast Iron	C(M)-UCFC	–	C(M)-UKFC	C(M)-ASFC C(M)-ARFC	–	–
Rhombus Flange		–	UCFL	UELFL RELFL	UKFL	ASFL ARFL	AELFL JELFL	–
		Steel	S(M)-UCFL	–	S(M)-UKFL	S(M)-ASFL S(M)-ARFL	–	–
		Cast Iron	C(M)-UCFL	–	C(M)-UKFL	C(M)-ASFL C(M)-ARFL	–	–
Square Flange		–	UCFU	UELFU RELFU	UKFU	ASFU ARFU	AELFU JELFU	–
Rhombus Flange		–	UCFLU	UELFLU RELFLU	UKFLU	ASFLU ARFLU	AELFLU JELFLU	–
Modified Rhombus Flange		–	UCFA	UELFA RELFA	UKFA	ASFA ARFA	AELFA JELFA	–
		Steel	S(M)-UCFA	–	S(M)-UKFA	S(M)-ASFA S(M)-ARFA	–	–
Light Rhombus Flange		–	–	–	–	ASFB ARFB	AELFB JELFB	CSFB
Light Rhombus Flange		–	–	–	–	ASFD ARFD	AELFD JELFD	–
Modified Flange		–	UCFH	UELFH RELFH	UKFH	ASFH ARFH	AELFH JELFH	–

Remarks 1. The codes "S-" and "C-" at the head of the type codes indicate steel plate covered bearing units and cast iron covered bearing units, respectively.
2. Single-sided closed covered bearing units made of steel and cast iron are also available.
These bearing units are identified with the codes "SM-"(steel plate) and "CM-"(cast iron) at the head of the type codes, respectively.
3. "UC" type stainless steel bearings are also available. For further details, consult **NTN** (Stainless Series Bearing unit)

Table 4.3 (3) Other cast iron units

Housing Type Material : Cast Iron		Cover	Bearing Type					
			UC	UEL REL	UK	AS AR	AEL JEL	CS
Take-up		–	UCT	UELT RELT	UKT	AST ART	AELT JELT	–
		Steel	S(M)-UCT	–	S(M)-UKT	S(M)-AST S(M)-ART	–	–
		Cast Iron	C(M)-UCT	–	C(M)-UKT	C(M)-AST C(M)-ART	–	–
Cartridge		–	UCC	UELC RELC	UKC	ASC ARC	AELC JELC	–
Hanger		–	UCHB	UELHB RELHB	UKHB	ASHB ARHB	AELHB JELHB	–

Remarks 1. The codes "S-" and "C-" at the head of the type codes indicate steel plate covered bearing units and cast iron covered bearing units, respectively.
2. Single-sided closed covered bearing units made of steel and cast iron are also available.
These bearing units are identified with the codes "SM-"(steel plate) and "CM-"(cast iron) at the head of the type codes, respectively.
3. "UC" type stainless steel bearings are also available. For further details, consult **NTN** (Stainless Series Bearing unit)

Table 4.3 (4) Bearing units with ductile cast iron housing (Ductile series)

Housing Type Material : Spheroidal Graphite Cast Iron		Cover	Bearing Type					
			UC	UEL REL	UK	AS AR	AEL JEL	CS
Pillow Block		–	UCPE	UELPE RELPE	UKPE	ASPE ARPE	AELPE JELPE	–
Rhombus Flange		–	UCFE	UELFE RELFE	UKFE	ASFE ARFE	AELFE JELFE	–

Remarks 1. "UC" type stainless steel bearings are also available. For further details, consult **NTN** (Stainless Series Bearing unit).

Table 4.3 (5) Bearing units steel series

Housing Type Material : General Structural Rolled Steel		Cover	Bearing Type					
			UC	UEL REL	UK	AS AR	AEL JEL	CS
Pillow Block		–	UCPG	UELPG RELPG	UKPG	ASPG ARPG	AELPG JELPG	–
		Steel	S(M)-UCPG	–	S(M)-UKPG	S(M)-ASPG S(M)-ARPG	–	–
		Cast Iron	C(M)-UCPG	–	C(M)-UKPG	C(M)-ASPG C(M)-ARPG	–	–
Thick Pillow Block		–	UCIPG	UELIPG RELIPG	UKIPG	–	–	–
		Steel	S(M)-UCIPG	–	S(M)-UKIPG	–	–	–
		Cast Iron	C(M)-UCIPG	–	C(M)-UKIPG	–	–	–
Square Flange		–	UCFG	UELFG RELFG	UKFG	ASFG ARFG	AELFG JELFG	–
		Steel	S(M)-UCFG	–	S(M)-UKFG	S(M)-ASFG S(M)-ARFG	–	–
		Cast Iron	C(M)-UCFG	–	C(M)-UKFG	C(M)-ASFG C(M)-ARFG	–	–
Square Flange W/Spigot Joint		–	UCFSG	UELFSG	UKFSG	–	–	–
		Cast Iron	C(M)-UCFSG	–	C(M)-UKFSG	–	–	–
Round Flange W/Spigot Joint		–	UCFCG	UELFCG RELFCG	UKFCG	ASFCG ARFCG	AELFCG JELFCG	–
		Steel	S(M)-UCFCG	–	S(M)-UKFCG	S(M)-ASFCG S(M)-ARFCG	–	–
		Cast Iron	C(M)-UCFCG	–	C(M)-UKFCG	C(M)-ASFCG C(M)-ARFCG	–	–
Rhombus Flange		–	UCFLG	UELFLG RELFLG	UKFLG	ASFLG ARFLG	AELFLG JELFLG	–
		Steel	S(M)-UCFLG	–	S(M)-UKFLG	S(M)-ASFLG S(M)-ARFLG	–	–
		Cast Iron	C(M)-UCFLG	–	C(M)-UKFLG	C(M)-ASFLG C(M)-ARFLG	–	–
Take-up		–	UCTG	UELTG RELTG	UKTG	ASTG ARTG	AELTG JELTG	–
		Steel	S(M)-UCTG	–	S(M)-UKTG	S(M)-ASTG S(M)-ARTG	–	–
		Cast Iron	C(M)-UCTG	–	C(M)-UKTG	C(M)-ASTG C(M)-ARTG	–	–

Remarks 1. The codes "S-" and "C-" at the head of the type codes indicate steel plate covered bearing units and cast iron covered bearing units, respectively.
2. Single-sided closed covered bearing units made of steel and cast iron are also available.
3. "UC" type stainless steel bearings are also available. For further details, consult **NTN** (Stainless Series Bearing unit)

Table 4.3 (6) Bearing units stainless series

Housing Type Material : Stainless Steel		Cover	Bearing Type					
			UC	UEL REL	UK	AS AR	AEL JEL	CS
Pillow Block		–	F-UCPM	–	–	–	–	–
Rhombus Flange		–	F-UCFM	–	–	–	–	–

Table 4.3 (7) Bearing units plastic housing series

Housing Type Material : Glass Fiber Reinforcing Resin		Cover	Bearing Type					
			UC	UEL REL	UK	AS AR	AEL JEL	CS
Pillow Block		–	F-UCPR	–	–	–	–	–
		Resin	F-RM-UCPR	–	–	–	–	–
Rhombus Flange		–	F-UCFLR	–	–	–	–	–
		Resin	F-RM-UCFLR	–	–	–	–	–

Remarks 1.The code "RM-" at the head of the type codes indicates single-side closed resin covered unit.

Table 4.3 (8) Steel plate units

Housing Type Material : Steel Plate		Cover	Bearing Type					
			UC	UEL REL	UK	AS AR	AEL JEL	CS
Pillow Block		–	–	–	–	ASPP	AELPP	CSPP
Pillow Block W/Rubber Ring		–	–	–	–	ASRPP	AELRPP	CSRPP
Round Flange		–	–	–	–	ASPF	AELPF	CSPF
Round Flange W/Rubber Ring		–	–	–	–	ASRPF	AELRPF	CSRPF
Rhombus Flange		–	–	–	–	ASPFL	AELPFL	CSPFL
Rhombus Flange W/Rubber Ring		–	–	–	–	ASRPFL	AELRPFL	CSRPFL

Table 4.3 (9) Stretcher units

		Cover	Bearing Type				
			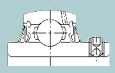 UC	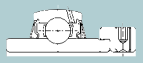 UEL 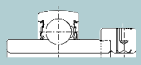 REL	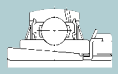 UK	AS AR	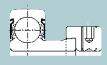 AEL JEL
Mini Type		—	—	—	—	ASPT	AELPT
Angle Steel Frame Type		—	UCT-00	UELT-00 RELT-00	UKT-00	AST-00 ART-00	AELT-00 JELT-00
		Steel	S(M)-UCT-00	—	S(M)-UKT-00	S(M)-AST-00 S(M)-ART-00	—
		Cast Iron	C(M)-UCT-00	—	C(M)-UKT-00	C(M)-AST-00 C(M)-ART-00	—
Light Channel Steel Frame Type	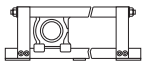	—	UCL-00	UELL-00 RELL-00	UKL-00	ASL-00 ARL-00	AELL-00 JELL-00
		Steel	S(M)-UCL-00	—	S(M)-UKL-00	S(M)-ASL-00 S(M)-ARL-00	—
		Cast Iron	C(M)-UCL-00	—	C(M)-UKL-00	C(M)-ASL-00 C(M)-ARL-00	—
Channel Steel Frame Type	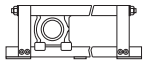	—	UCM-00	UELM-00 RELM-00	UKM-00	ASM-00 ARM-00	AELM-00 JELM-00
		Steel	S(M)-UCM-00	—	S(M)-UKM-00	S(M)-ASM-00 S(M)-ARM-00	—
		Cast Iron	C(M)-UCM-00	—	C(M)-UKM-00	C(M)-ASM-00 C(M)-ARM-00	—

Remarks 1. The codes "S-" and "C-" at the head of the type codes indicate steel plate covered bearing units and cast iron covered bearing units, respectively.
2. Single-sided closed covered bearing units made of steel and cast iron are also available.
These bearing units are identified with the codes "SM-"(steel plate) and "CM-"(cast iron) at the head of the type codes, respectively.
3. "UC" type stainless steel bearings are also available. For further details, consult **NTN** (Stainless Series Bearing unit)

5. Tolerance

The tolerances of the **NTN** bearing units are in accordance with the following JIS specifications :

5.1 Tolerances of ball bearings for the unit

The tolerances of ball bearings used in the unit are shown in the following tables, 5.1 to 5.4.

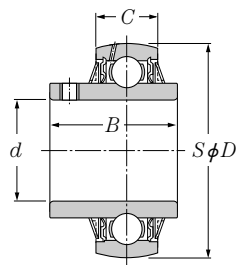

Set screw type

Table 5.1 (1) Cylindrical bore (UC, UCS, AS, ASS, UEL, UELS, AEL, AELS) Unit: μm/0.0001 inch

Nominal bore diameter d				Cylindrical bore					Radial runout K_{ia} (reference)
				Bore diameter			Width		
over		incl.		Δ_{dmp} Deviations		V_{dp} Variations	Δ_{Bs}, Δ_{Cs} Deviations (reference)		
mm	inch	mm	inch	high	low	max.	high	low	(max)
10	0.3937	18	0.7087	+15 + 6	0 0	10 4	0 0	−120 − 47	15 6
18	0.7087	31.750	1.2500	+18 + 7	0 0	12 5	0 0	−120 − 47	18 7
31.750	1.2500	50.800	2.0000	+21 + 8	0 0	14 6	0 0	−120 − 47	20 8
50.800	2.0000	80	3.1496	+24 + 9	0 0	16 6	0 0	−150 − 59	25 10
80	3.1496	120	4.7244	+28 +11	0 0	19 7	0 0	−200 − 79	30 12
120	4.7244	180	7.0866	+33 +13	0 0	22 9	0 0	−250 − 98	35 14

Note: Symbols
Δ_{dmp}: Mean bore diameter deviation V_{dp}: Bore diameter variation
Δ_{Bs}: Inner ring width deviation
Δ_{Cs}: Outer ring width deviation

Table 5.1 (2) Cylindrical bore (AR, ARS, JEL, JELS, REL, RELS) Unit: μm/0.0001 inch

Nominal bore diameter d				Cylindrical bore diameter		
over		incl.		Δ_{dmp} Deviations		V_{dp} Variations
mm	inch	mm	inch	high	low	max.
10	0.3937	18	0.7087	+13 + 5	0 0	6 2
18	0.7087	31.750	1.2500	+13 + 5	0 0	6 2
31.750	1.2500	50.800	2.0000	+13 + 5	0 0	6 2
50.800	2.0000	80	3.1496	+15 + 6	0 0	8 3

Table 5.1 (3) Cylindrical bore (CS)

Unit: μm/0.0001 inch

Nominal bore diameter d				Cylindrical bore					Radial runout K_{ia} (reference)
				Bore diameter			Width		
over		incl.		Δ_{dmp} Deviations		V_{dp} Variations	Δ_{Bs}, Δ_{Cs} Deviations (reference)		
mm	inch	mm	inch	high	low	max.	high	low	max.
10	0.3937	18	0.7087	0 0	−8 −3	10 4	0 0	−120 −47	15 6
18	0.7087	31.75	1.2500	0 0	−10 −4	12 5	0 0	−120 −47	18 7
31.75	1.2500	50.8	2.0000	0 0	−12 −5	14 6	0 0	−120 −47	20 8
50.8	2.0000	80	3.1496	0 0	−15 −6	16 6	0 0	−150 −59	25 10

Table 5.2 Tapered bore (UK, UKS)

Unit: μm/0.0001 inch

Nominal bore diameter d				Δ_{dmp} Deviations		$\Delta_{d1mp}-\Delta_{dmp}$		V_{dp} 1)
over		incl.						
mm	inch	mm	inch	high	low	high	low	max.
18	0.7087	30	1.1811	+33 +13	0 0	+21 +8	0 0	13 5
30	1.1811	50	1.9685	+39 +15	0 0	+25 +10	0 0	16 6
50	1.9685	80	3.1496	+46 +18	0 0	+30 +12	0 0	19 7
80	3.1496	120	4.7244	+54 +21	0 0	+35 +14	0 0	22 9
120	4.7244	180	7.0866	+63 +25	0 0	+40 +16	0 0	40 16

1) Applies to all radial flat planes of inner ring tapered bore.
Note: 1. To be applied for tapered bore of 1/12.
2. Symbols of quantity or values

d_1: Basic diameter at the theoretical large end of the tapered bore

$$d_1 = d + \frac{1}{12}B$$

Δ_{dmp}: Dimensional difference of the average bore diameter within the flat surface at the theoretical small-end of the tapered bore

Δ_{d1mp}: Dimensional difference of the average bore diameter within the flat surface at the theoretical large-end of the tapered bore

V_{dp}: Unevenness of the bore diameter with the flat surface

B : Nominal width of inner ring

α : Half of the tapered bore's nominal taper angle

α =2°23'9.4"
=2.385 94°
=0.041 643rad

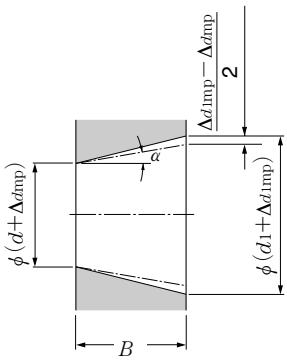

Tapered bore having dimensional difference of the average bore diameter within the flat surface

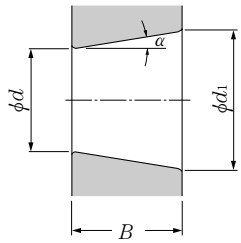

Theoretical tapered bore

Table 5.3 Outer ring Unit: μm/0.0001 inch

Nominal outside diameter D				Mean outside diameter deviation Δ_{Dm}		Radial runout K_{ea} (reference)
over		incl.				
mm	inch	mm	inch	high	low	max.
18	0.7087	30	1.1811	0 0	−9 −4	15 6
30	1.1811	50	1.9685	0 0	−11 −4	20 8
50	1.9685	80	3.1496	0 0	−13 −5	25 10
80	3.1496	120	4.7244	0 0	−15 −6	35 14
120	4.7244	150	5.9055	0 0	−18 −7	40 16
150	5.9055	180	7.0866	0 0	−25 −10	45 18
180	7.0866	250	9.8425	0 0	−30 −12	50 20
250	9.8425	315	12.4016	0 0	−35 −14	60 24

Note: 1) The low deviation of outside diameter D_m does not apply within the distance of 1/4 the width of the outer ring from the side.

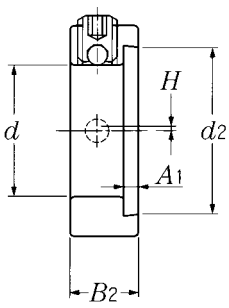

Eccentric locking collar

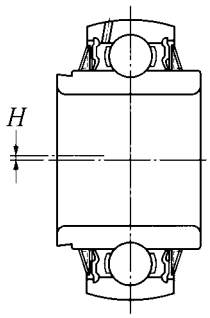

Eccentric locking collar type

Table 5.4 Eccentric locking collar Unit: mm/inch

Nominal bore diameter d				Bore diameter deviation Δ_{ds}		Small bore diameter of eccentric surface deviation Δ_{d2s}		Eccentricity deviation Δ_{Hs}		Collar width deviation Δ_{B2s}		Collar eccentric surface width deviation Δ_{A1s}	
over		incl.											
mm	inch	mm	inch	high	low	high	low	high	low	high	low	high	low
10	0.3937	36.512	1.4375	+0.250 +0.010	+0.025 +0.001	+0.3 +0.012	0 0	+0.1 +0.004	−0.1 −0.004	+0.270 +0.011	−0.270 −0.011	0 0	−0.180 −0.007
36.512	1.4375	55.562	2.1875	+0.300 +0.012	+0.025 +0.001	+0.4 +0.016	0 0	+0.1 +0.004	−0.1 −0.004	+0.330 +0.013	−0.330 −0.013	0 0	−0.180 −0.007
55.562	2.1875	61.912	2.4375	+0.300 +0.012	+0.025 +0.001	+0.4 +0.016	0 0	+0.1 +0.004	−0.1 −0.004	+0.330 +0.013	−0.330 −0.013	0 0	−0.220 −0.009

5.2 Tolerances of housings

Table 5.5 Spherical bore diameter of housings

Unit: μm/0.0001 inch

Nominal spherical bore diameter D_a				D_a Deviations Δ_{Dam}					
over		incl.		Tolerance class H7		Tolerance class J7		Tolerance class K7	
mm	inch	mm	inch	high	low	high	low	high	low
30	1.1811	50	1.9685	+25 +10	0 0	+14 + 6	−11 − 4	+ 7 + 3	−18 − 7
50	1.9685	80	3.1496	+30 +12	0 0	+18 + 7	−12 − 5	+ 9 + 4	−21 − 8
80	3.1496	120	4.7244	+35 +14	0 0	+22 + 9	−13 − 5	–	–
120	4.7244	180	7.0866	+40 +16	0 0	+26 +10	−14 − 6	–	–
180	7.0866	250	9.8425	+46 +18	0 0	+30 +12	−16 − 6	–	–
250	9.8425	315	12.4016	+52 +20	0 0	+36 +14	−16 − 6	–	–

Note: 1) Symbols Δ_{Dam}: Mean spherical bore diameter deviation
2) Dimensional tolerances for spherical bore diameter of housing are classified as H7 for clearance fit, and J7 for intermediate fit.
3) The housing bore diameter for a spherical OD bearing insert would use the following fit;
Housing bore diameter ≦ 52mm : K7 fit
52mm < Housing bore diameter ≦180mm : J7 fit
Housing bore diameter > 180mm : H7 fit

Table 5.6 (1) Pillow block housings

Unit: mm/inch

Housing numbers			H Deviations Δ_{Hs}
P, IP, HP, UP PB, PM, PL PE, PG, IPG	P, IP PG, IPG	P	
201	–	–	±0.15 ±0.006
203	–	–	
204	–	–	
205	305	X05	
206	306	X06	
207	307	X07	
208	308	X08	
209	309	X09	
210	310	X10	
211	311	X11	±0.2 ±0.008
212	312	X12	
213	313	X13	
214	314	X14	
215	315	X15	
216	316	X16	
217	317	X17	
218	318	X18	
–	319	–	±0.3 ±0.012
–	320	X20	
–	321	–	
–	322	–	
–	324	–	
–	326	–	
–	328	–	

Note: 1) H is height of the shaft center line.
2) This table can be applied for bearing units with dust covers.

Table 5.6 (2) Pillow block resin housings

Unit: mm/inch

Housing numbers	H Deviations Δ_{Hs}
PR204	±0.25 ±0.010
PR205	
PR206	
PR207	
PR208	

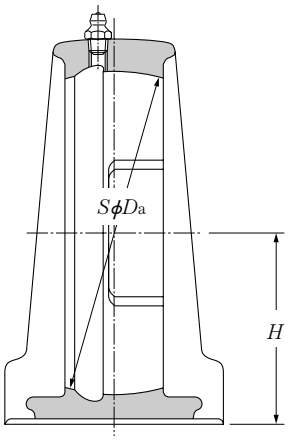

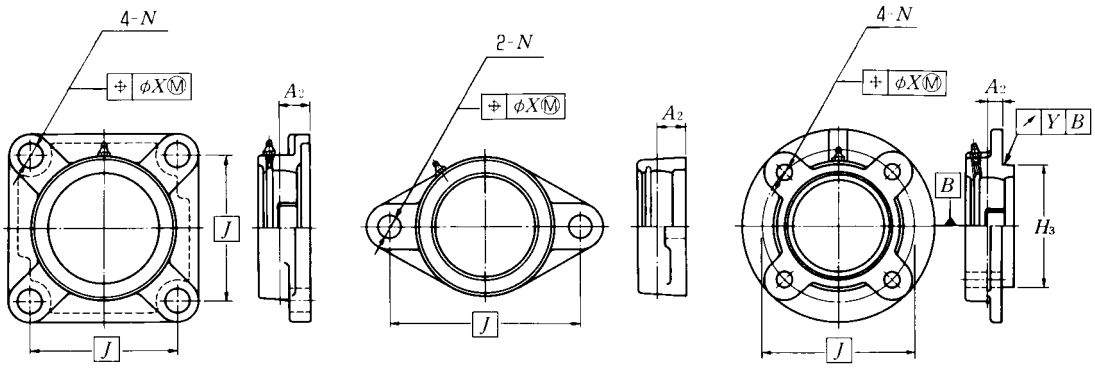

(F, FU, FS, FG, FSG) (FL, FLU, FB, FM, FD, FLG) (FC)

Table 5.7 (1) Flange unit housings Unit: mm/inch

Housing numbers			location tolerance of bolt hole	A_2 Deviations Δ_{A2s}	H_3 Deviations						Radial runout of spigot joint Δ_{is} (max.)
F, FU,FC FL, FLU FB, FM, FD FG, FCG, FLG	F, FL, FS FG, FLG FSG	F, FC, FL			FC2, FCG2		FS3, FSG3		FCX		
					high	low	high	low	high	low	
201	—	—	0.7 0.028	±0.5 ±0.020	0 0	−0.046 −0.0018	—	—	—	—	0.2 0.008
204	—	—					0 0	−0.046 −0.0018	0 0	−0.046 −0.0018	
205	305	X05					0 0	−0.054 −0.0021	0 0	−0.054 −0.0021	
206	306	X06			0 0	−0.054 −0.0021					
207	307	X07					0 0	−0.063 −0.0025			
208	308	X08									
209	309	X09									
210	310	X10									
211	311	X11	1 0.039	±0.8 ±0.032	0 0	−0.063 −0.0025			0 0	−0.063 −0.0025	0.3 0.012
212	312	X12					0 0	−0.072 −0.0028			
213	313	X13							0 0	−0.072 −0.0028	
214	314	X14									
215	315	X15									
216	316	X16									
217	317	X17									
218	318	X18			0 0	−0.072 −0.0028					
—	319	—			—	—	0 0	−0.081 −0.0032	—	—	0.4 0.016
—	320	X20									
—	321	—					0 0	−0.089 −0.0035			
—	322	—									
—	324	—									
—	326	—									
—	328	—									

Note: 1) J is the bolt hole's center line dimension, and P,C,D. A_2 is distance between the center line of spherical bore diameter of the housing and mounting surfaces, and H_3 is outside diameter of the spigot joint.
2) Radial runout of spigot joint is applied for flange units with spigot joints.
3) This table can be applied for bearing units with dust covers.

Table 5.7 (2) Flange unit housings (diameter of bolt hole) Unit: mm/inch

Housing type	Nominal bore diameter N				N Deviations Δ_{Ns}	
	over		incl.			
	mm	inch	mm	inch	mm	inch
F, FL, FC, FS, FB, FD FA, FH, FU, FLU, FM FG, FLG, FCG, FSG	–	–	30	1.1811	±0.2	±0.008
	30	1.1811	51	2.008	±0.3	±0.012

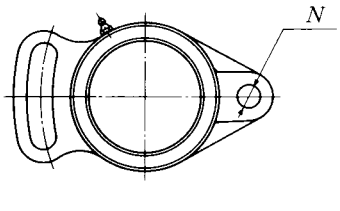

(FA)

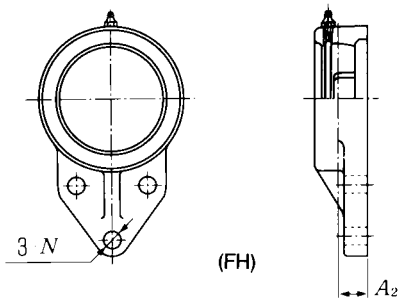

(FH)

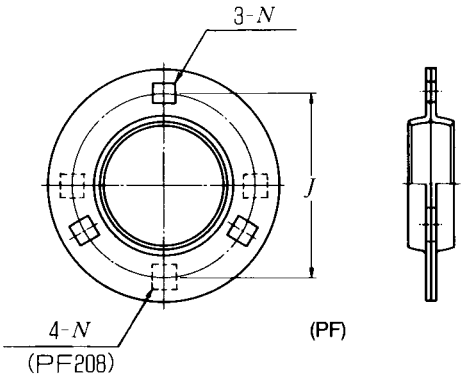

(PF)

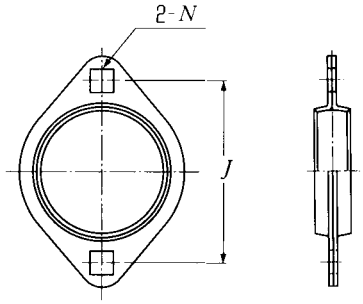

(PFL)

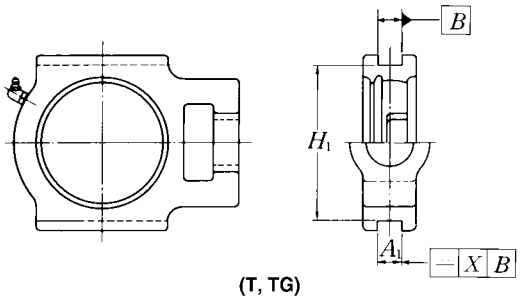

(T, TG)

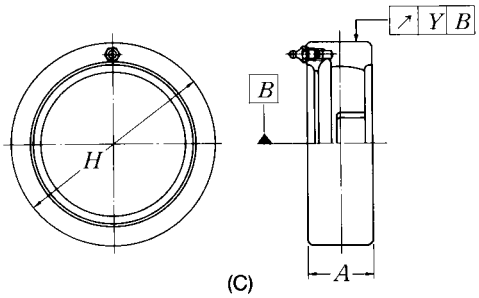

(C)

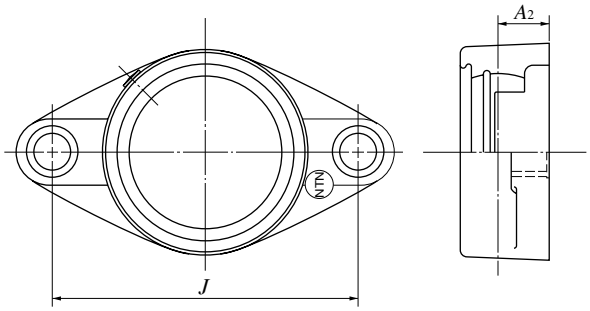

(FLR)

Table 5.8 (1) Flanged units housings (FH, FA, PF, PFL) Unit: mm/inch

Housing numbers	A_2 Deviations Δ_{A2s}	Housing numbers	J Deviations Δ_{Js}	N Deviations Δ_{Ns}
—	±0.5 ±0.020	PF203	±0.4 ±0.016	±0.25 ±0.010
FH, FA204		PF204		
FH, FA205		PF205		
FH, FA206		PF206		
FH, FA207		PF207		
FH, FA208		PF208		
FH, FA209		PFL203		
FH, FA210		PFL204		
		PFL205		
FA211	±0.8 ±0.032	PFL206		
		PFL207		

Note: 1) A_2 is distance between the center line of spherical bore diameter of housings.
2) J is the bolt hole's center line dimension.

Table 5.8 (2) Flanged units housings (FLR) Unit: mm/inch

Housing numbers	J Deviations Δ_{Js}	A_2 Deviations Δ_{A2s}
FLR204	±0.7 ±0.028	±0.5 ±0.020
FLR205		
FLR206		
FLR207		
FLR208		

Table 5.9 Take-up unit housings (T, TG) Unit: mm/inch

Housing numbers			A_1 Deviations Δ_{A1s}	H_1 Deviations Δ_{H1s}		Parallelism of guide
T, TG	T, TG	T		high	low	
204	—	—	+0.2 0 +0.008 0	0 0	–0.5 –0.020	0.5 0.020
205	305	X05				
206	306	X06				
207	307	X07				
208	308	X08				
209	309	X09				
210	310	X10				
211	311	X11	+0.3 0 +0.012 0	0 0	–0.8 –0.032	0.6 0.024
212	312	X12				
213	313	X13				
214	314	X14				
215	315	X15				
216	316	X16				
217	317	X17				
—	318	—				
—	319	—				0.7 0.028
—	320	—				
—	321	—				
—	322	—				
—	324	—				0.8 0.032
—	326	—				
—	328	—				

Note: 1) A_1 is the width of guide rail grooves.
2) H_1 is the maximum span of guide rail grooves.
3) This table can be applied for bearing units with dust covers.

Table 5.10 Cartridge unit housings (C) Unit: mm/inch

Housing numbers			H Deviations Δ_{Hs}						Radial runout of outside surface	A Deviations Δ_{As}
			C2		C3		CX			
			high	low	high	low	high	low		
C204	—	—	0 0	–0.030 –0.0012	—	—	—	—	0.2 0.008	±0.2 ±0.008
C205	C305	CX05			0 0	–0.035 –0.0014	0 0	–0.035 –0.0014		
C206	C306	CX06	0 0	–0.035 –0.0014						
C207	C307	CX07								
C208	C308	CX08								
C209	C309	CX09								
C210	C310	CX10			0 0	–0.040 –0.0016	0 0	–0.040 –0.0016		
C211	C311	CX11	0 0	–0.040 –0.0016					0.3 0.012	±0.3 ±0.012
C212	C312	CX12								
C213	C313	—	—	—			—	—		
—	C314	—			0 0	–0.046 –0.0018				
—	C315	—								
—	C316	—								
—	C317	—								
—	C318	—								
—	C319	—								
—	C320	—			0 0	–0.052 –0.0020			0.4 0.016	
—	C321	—								
—	C322	—								
—	C324	—			0 0	–0.057 –0.0022				
—	C326	—								
—	C328	—								

Note: 1) H is the outside diameter of cartridge housings.
2) A is width of cartridge housings.

6. Basic Load Rating and Life

6.1 Bearing life

Even in bearings operating under normal conditions, the surfaces of the raceway and rolling elements are constantly being subjected to repeated compressive stresses which cause flaking of these surfaces to occur. This flaking is due to material fatigue and will eventually cause the bearings to fail. The effective life of a bearing is usually defined in terms of the total number of revolutions a bearing can undergo before flaking of either the raceway surface or the rolling element surfaces occurs.

Other causes of bearing failure are often attributed to problems such as seizing, abrasions, cracking, chipping, gnawing, rust, etc. However, these so called "causes" of bearing failure are usually themselves caused by improper installation, insufficient or improper lubrication, faulty sealing or inaccurate bearing selection. Since the above mentioned "causes" of bearing failure can be avoided by taking the proper precautions, and are not simply caused by material fatigue, they are considered separately from the flaking aspect.

6.2 Basic rating life and basic dynamic load rating

A group of seemingly identical bearings when subjected to identical load and operating conditions will exhibit a wide diversity in their durability.

This "life" disparity can be accounted for by the difference in the fatigue of the bearing material itself. This disparity is considered statistically when calculating bearing life, and the basic rating life is defined as follows.

The basic rating life is based on a 90% statistical model which is expressed as the total number of revolutions 90% of the bearings, in an identical group of bearings subjected to identical operating conditions, will attain or surpass before flaking due to material fatigue occurs. For bearings operating at fixed constant speeds, the basic rating life (90% reliability) is expressed in the total number of hours of operation.

The basic dynamic load rating is an expression of the load capacity of a bearing based on a constant load which the bearing can sustain for one million revolutions (the basic life rating). For radial bearings this rating applies to pure radial loads, and for thrust bearings it refers to pure axial loads. The basic dynamic load ratings given in the bearing tables of this catalog are for bearings constructed of **NTN** standard bearing materials, using standard manufacturing techniques. Please consult **NTN** for basic load ratings of bearings constructed of special materials or using special manufacturing techniques.

The relationship between the basic rated life, the basic dynamic load rating and the bearing load is given in formula (6.1).

$$L_{10} = \left(\frac{C_r}{P_r}\right)^3 \quad \cdots\cdots \quad (6.1)$$

where,
L_{10}: Basic rating life 10^6 revolutions
C_r: Basic dynamic load rating, N, lbf
P_r: Equivalent dynamic load, N, lbf

The basic rated life can also be expressed in terms of hours of operation (revolution), and is calculated as shown in formula (6.2).

$$L_{10h} = 500 f_h^3 \quad \cdots\cdots \quad (6.2)$$

$$f_h = f_n \frac{C_r}{P_r} \quad \cdots\cdots \quad (6.3)$$

$$f_n = \left(\frac{33.3}{n}\right)^{1/3} \quad \cdots\cdots \quad (6.4)$$

where,
L_{10h}: Basic rating life, h
f_h: Life factor
f_n: Speed factor
n: Rotational speed, min^{-1}

Formula (6.2) can also be expressed as shown in formula (6.5).

$$L_{10h} = \frac{10^6}{60n}\left(\frac{C_r}{P_r}\right)^3 \quad \cdots\cdots \quad (6.5)$$

The relation between rotational speed n and speed factor f_n as well as the relation between the basic rated life L_{10h} and the life factor f_h is shown in Fig. 6.1.

When several bearings are incorporated in machines or equipment as complete units, all the bearings in the unit are considered as a whole when computing bearing life (see formula 6.6). The total bearing life of the unit is a life rating based on the viable lifetime of the unit before even one of the bearings fails due to rolling contact fatigue.

$$L = \frac{1}{\left(\frac{1}{L_1^{1.1}} + \frac{1}{L_2^{1.1}} + \cdots\cdots + \frac{1}{L_n^{1.1}}\right)^{1/1.1}} \quad \cdots\cdots \quad (6.6)$$

where,
L: Total life of the whole bearing assembly h
$L_1, L_2 \cdots L_n$: Rated life of bearings 1, 2, $\cdots n$, h

In the case where load and the number of revolutions change at regulated intervals, after finding the rated life $L_1, L_2, \cdots, L_n$ under conditions of n_1, p_1 : n_2, p_2 : n_n, p_n; the built-in life L_m can be given by the formula (6.7).

$$L_1 = \frac{10^6}{60 n_1} \left(\frac{C_r}{P_1}\right)^3$$

$$L_2 = \frac{10^6}{60 n_2} \left(\frac{C_r}{P_2}\right)^3$$

$$\vdots$$

$$L_n = \frac{10^6}{60 n_n} \left(\frac{C_r}{P_n}\right)^3$$

$$L_m = \left(\frac{\phi_1}{L_1} + \frac{\phi_2}{L_2} + \cdots\cdots \frac{\phi_n}{L_n}\right)^{-1} \cdots\cdots\cdots\cdots\cdots \quad (6.7)$$

where,
$L_1, L_2, \cdots, L_n$: Rated life under condition 1, 2, $\cdots n$, h
$n_1, n_2, \cdots, n_n$: Number of revolutions under condition 1, 2, $\cdots n$, min^{-1}
$P_1, P_2, \cdots, P_n$: Equivalent load under condition 1, 2, $\cdots n$, N, lbf
$\phi_1, \phi_2, \cdots, \phi_n$: Ratio of condition 1, 2, $\cdots n$, accounting for the total operating time
L_m: Built-in life, h

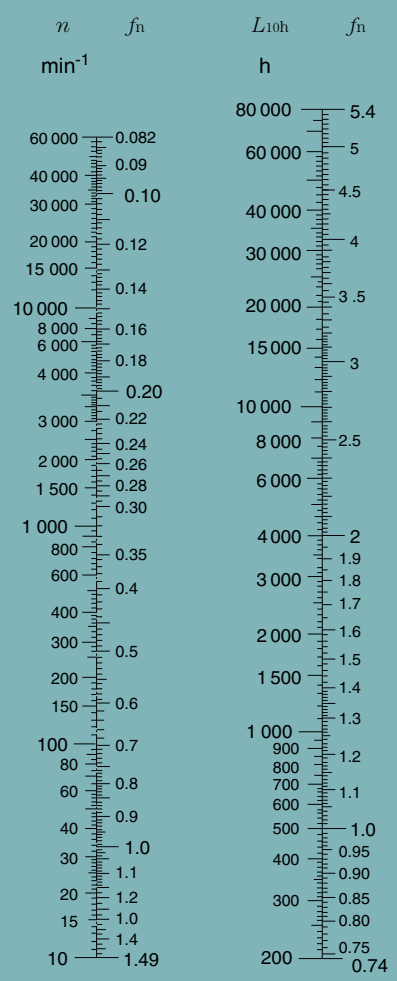

Fig. 6.1 Bearing life rating scale

Table 6.1 Rating life for applications

Service classification	Machine application	Life time L_n
Machines used occasionally	Door mechanisms, Garage shutter	500
Equipment for short period or intermittent serviceinterruption permissible	Household appliances, Electric hand tools, Agricultural machines, Lifting tackles in shops	4 000～ 8 000
Intermittent service machines-high reliability	Power-Station auxiliary equipment, Elevators, Conveyors, Deck cranes	8 000～ 14 000
Machines used for 8 hours a day, but not always in full operation	Ore wagon axles, Important gear units	14 000～ 20 000
Machines fully used for 8 hours	Blowers, General machinery in shops, Continuous operation cranes	20 000～ 30 000
Machines continuously used for 24 hours a day	Compressors, Pumps	50 000～ 60 000
Machines continuously used for 24 hours a day with maximum reliability	Power-station equipment, Water-supply equipment for urban areas, Mine ventilators	100 000～200 000

6.3 Machine applications and requisite life

When selecting a bearing, it is essential that the requisite life of the bearing be established in relation to the operating conditions. The requisite life of the bearing is usually determined by the type of machine the bearing is to be used in, and duration of service and operational reliability requirements. A general guide to these requisite life criteria is shown in Table 6.1. When determining bearing size, the fatigue life of the bearing is an important factor; however, besides bearing life, the strength and rigidity of the shaft and housing must also be taken into consideration.

6.4 Adjusted life rating factor

The basic bearing life rating (90% reliability factor) can be calculated through the formulas mentioned earlier in Section 6.2. However, in some applications a bearing life factor of over 90% reliability may be required. To meet these requirements, bearing life can be lengthened by the use of specially improved bearing materials or special construction techniques. Moreover, according to elastohydrodynamic lubrication theory, it is clear that the bearing operating conditions (lubrication, temperature, speed, etc.) all exert an effect on bearing life. All these adjustment factors are taken into consideration when calculating bearing life, and using the life adjustment factor as prescribed in ISO 281, the adjusted bearing life can be arrived at.

$$L_{na} = a_1 a_2 a_3 \left(\frac{C}{P}\right)^3 \quad \text{(6.8)}$$

where,

L_{na} : Adjusted rating life in millions of revolutions (10^6)
a_1 : Reliability factor
a_2 : Bearing characteristics factor
a_3 : Operating conditions factor

6.4.1 Reliability factor a_1

The values for the reliability adjustment factor a_1 (for a reliability factor higher than 90%) can be found in Table 6.2.

6.4.2 Bearing characteristics factor a_2

The life of a bearing is affected by the material type and quality as well as the manufacturing process. In this regard, the life is adjusted by the use of an a_2 factor.

The basic dynamic load ratings listed in the catalog are based on **NTN**'s standard material and process, therefore, the adjustment factor $a_2 = 1$. When special materials or processes are used the adjustment factor a_2 can be larger than 1.

NTN bearings can generally be used up to 120˚C. If bearings are operated at a higher temperature, the bearing must be specially heat treated (stabilized) so that inadmissible dimensional change does not occur due to micro-structure change. This special heat treatment might cause the reduction of bearing life because of a hardness change.

Table 6.2 Reliability factor a_1

Reliability %	L_n	Reliability factor a_1
90	L_{10}	1.00
95	L_5	0.62
96	L_4	0.53
97	L_3	0.44
98	L_2	0.33
99	L_1	0.21

6.4.3 Operating conditions factor a_3

Operating conditions factor a_3 is used to compensate for when lubrication condition worsens due to rise in temperature or rotational speed, lubricant deteriorates, or becomes contaminated with foreign matter.

Generally speaking, when lubricating conditions are satisfactory, the a_3 factor has a value of one; and when lubricating conditions are exceptionally favorable, and all other operating conditions are normal, a_3 can have a value greater than one.

However, when lubricating conditions are particularly unfavorable and the oil film formation on the contact surfaces of the raceway and rolling elements is insufficient, the value of a_3 becomes less than one. This insufficient oil film formation can be caused, for example, by the lubricating oil viscosity being too low for the operating temperature (below 13 mm^2/s for ball bearings) ; or by exceptionally low rotational speed (n min^{-1} X d_p mm less than 10000). For bearings used under special operating conditions, please consult **NTN**.

● Bearing operating temperature is too high

If bearing operating temperature is too high, the raceway becomes softened, thereby shortening life.

Life is adjusted by multiplying by the values given in fig.6.2 as the operating condition factor according to operating temperature. This however does not apply to bearings that have been treated to stabilize dimensions.

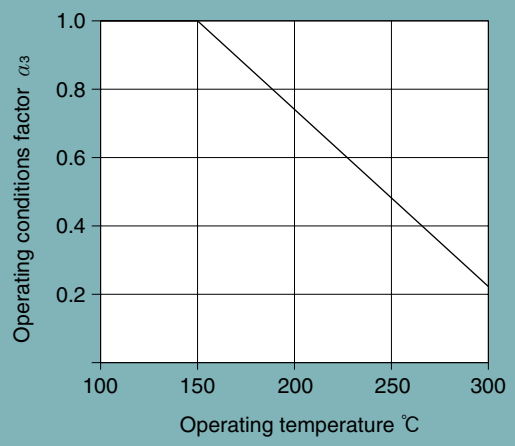

Fig. 6.2 Operating conditions factor according to operating temperature

6.5 Basic static load rating

When stationary rolling bearings are subjected to static loads, they suffer from partial permanent deformation of the contact surfaces at the contact point between the rolling elements and the raceway. The amount of deformity increases as the load increases, and if this increase in load exceeds certain limits, the subsequent smooth operation of the bearing is impaired.

It has been found through experience that a permanent deformity of 0.0001 times the diameter of the rolling element, occurring at the most heavily stressed contact point between the raceway and the rolling elements, can be tolerated without any impairment in running efficiency.

The basic rated static load refers to a fixed static load limit at which a specified amount of permanent deformation occurs. It applies to pure radial loads for radial bearings. The maximum applied load values for contact stress occurring at the rolling element and raceway contact points are given below.

For ball bearings (for bearing unit) : 4200 Mpa.

6.6 Allowable static equivalent load

Generally the static equivalent load which can be permitted (see section 7.3) is limited by the basic static rated load as stated in Section 6.5. However, depending on requirements regarding friction and smooth operation, these limits may be greater or lesser than the basic static rated load.

In the following formula (6.9) and Table 6.4 the safety factor S_o can be determined considering the maximum static equivalent load.

$$S_o = \frac{C_o}{P_{o\,max}} \quad \cdots\cdots (6.9)$$

where,

S_o: Safety factor

C_o: Basic static load rating, N, lbf

$P_{o\,max}$: Maximum static equivalent load, N, lbf

Table 6.4 Minimum safety factor values S_o

Operating conditions	Ball bearings
High rotational accuracy demand	2
Normal rotating accuracy demand (Universal application)	1
Slight rotational accuracy deterioration permitted (Low speed, heavy loading, etc.)	0.5

Note :1) When vibration and/or shock loads are present, a load factor based on the shock load needs to be included in the $P_{o\,max}$ value.

7. Loads

7.1 Load acting on the bearing

It is very rare that the load on a bearing can be obtained by a simple calculation. Loads applied to the bearing generally include the weight of the rotating element itself, the load produced by the working of the machine, and the load resulting from transmission of power by the belt and gearwheel. Such loads include the radial load, which works on the bearing at right angles to its axis, and the thrust load, which works on the bearing parallel to its axis. These can work either singly or in combination. In addition, the operation of a machine inevitably produces a varying degree of vibrations and shocks. To take this into account, the theoretical value of a load is multiplied by a safety factor that has been derived from past experience. This is known as the "load factor".

Load acting on the bearing =
Load factor f_w × Calculated load

Table 7.1 below shows the generally accepted load factors f_w which correspond to the degree of shock to which the machine is subjected.

7.1.1 Load applied to the bearing by power transmission

The force working on the shaft when power is transmitted by belts, chains or gearwheels is obtained, in general, by the following formula:

$$T = 9\,550\,\frac{H}{n},\ 84\,500\,\frac{H}{n} \quad \cdots\cdots\cdots \quad (7.1)$$

$$K_t = \frac{T}{r} \quad \cdots\cdots\cdots\cdots\cdots\cdots\cdots\cdots\cdots\cdots \quad (7.2)$$

where,
T : Torque, N·m, lbf·inch.
H : Transmission power, kW
n : Rotational speed, min^{-1}
K_t : Transmission force (effective transmission force of belt or chain; tangential force of gearwheel), N, lbf
r: effective radius of belt pulley, sprocket wheel or gearwheel, m, inch

Accordingly, the load actually applied to the shaft by the transmission force can be obtained by the following formula:

Actual load = Factor × K_t ····· (7.3)

Different factors are adopted according to the transmission system in use. These will be dealt with in the following paragraphs.

Belt transmission

When power is transmitted by belt, the effective transmission force working on the belt pulley is calculated by formula (7.2). The term "effective transmission force of the belt" refers to the difference in tension between the tensioned side and the loose side of the belt. Therefore, to obtain the load actually acting on the shaft through the medium of the belt pulley, it is necessary to multiply the effective transmission force by a factor which takes into account the type of belt and the initial tension. This is known as the "belt factor".

Table 7.1 Load factors f_w

Load conditions	f_w	Examples
Little or no shock	1 to 1.2	Machines tools, electric machines, etc.
Some degree of shock; machines with reciprocating parts	1.2 to 1.5	Vehicles, driving mechanism, metal-working machinery, steel-making machines, paper-making machinery, rubber mixing machines, hydraulic equipment, hoists, transportation machinery, power-transmission equipment, woodworking machines, printing machines, etc.
violent shocks	1.5 to 3	Agricultural machines, vibrator screens, ball and tube mills, etc.

In the case of power transmission by belts, gear wheels, etc., load factors adopted are somewhat different from the above.
Factors used for power transmission by belts, gearwheels and chains, respectively, are given in the following sections.

Table 7.2 Belt factors f_b

Belt type	f_b
V-belt	1.5 to 2.0
Timing belt	1.1 to 1.3
Flat belt (with tension pulley)	2.5 to 3.0
Flat belt	3.0 to 4.0

Note :In cases where the distance between shafts is short, the revolution speed is low, or where operating conditions are severe, the higher f_b values should be adopted.

Gear transmission

In the case of gear transmissions, the theoretical gear load can be calculated from the transmission force and the type of gear. With spur gears, only a radial load is involved; whereas, with helical gears and bevel gears, an additional axial load is present.

The simplest case is that of spur gears. In this instance, the tangential force K_t is obtained from the formula (7.2) and the radial force K_s can be obtained from the following formula:

$$K_s = K_t \cdot \tan \alpha \quad \cdots\cdots \quad (7.4)$$

where,

α : is the pressure angle of the gear.

Accordingly, the theoretical composite force, K_r, working on the gear is obtained from the following formula:

$$K_r = \sqrt{K_t^2 + K_s^2} = K_t \cdot \sec \alpha \quad \cdots\cdots \quad (7.5)$$

Therefore, to obtain the radial load actually working on the shaft, the theoretical composite force, as above, is multiplied by a factor in which the accuracy and the degree of precision of the gear is taken into account. This is called the "gear factor" and is represented by the symbol f_z. In Table 7.3 is below, f_z values for spur wheels are given.

The gear factor is essentially almost the same as the previously described load factor, f_w. In some cases, however, vibrations and shocks are produced also by the machine of which the gear is a part. Here it is necessary to calculate the actual load working on the gear by further multiplying the gear load, as obtained above, by the load factor shown in Table 7.1, according to the degree of shock.

Table 7.3 Gear factors f_z

Gear	f_z
Precision gears (tolerance 0.02 mm 0.0008 inch max., for both pitch and shape)	1.05 to 1.1
Gears finished by ordinary machining work (tolerance 0.02 to 0.1 mm, 0.0008 to 0.0039 inch for both pitch and shape)	1.1 to 1.3

Chain transmission

When power is transmitted by chain, the effective transmission force working on the sprocket wheel is calculated by formula (7.2). To obtain the load actually working, the effective transmission force must be multiplied by the "chain factor", 1.2 to 1.5.

7.1.2 Distribution of the radial load

The load acting on the shaft is distributed to the bearings which support the shaft.

In Fig. 7.1, the load is applied to the shaft between two bearings; in Fig. 7.2 the load is applied to the shaft outside the two bearings. In practice, however, most cases are combinations of Fig. 7.1 and 7.2, and the load is usually a composite load, that is to say, a combination of radial and axial loads. Therefore they are calculated by the methods described in the following sections.

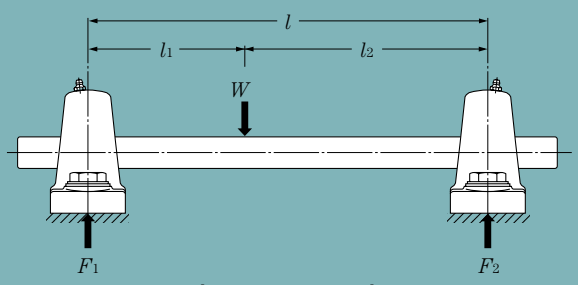

$$F_1 = \frac{l_2}{l} \cdot W \qquad F_2 = \frac{l_1}{l} \cdot W$$

Fig. 7.1

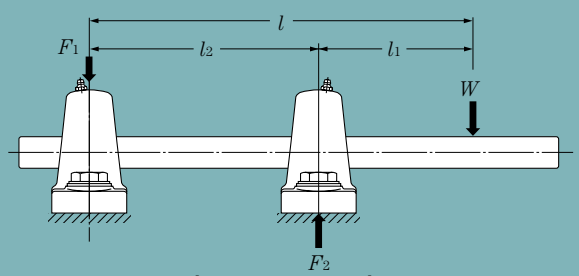

$$F_1 = \frac{l_1}{l_2} \cdot W \qquad F_2 = \frac{l}{l_2} \cdot W$$

Fig. 7.2

7.2 Dynamic equivalent radial load

For ball bearings used in the **NTN** unit, the basic rated dynamic loads C_r mentioned in the table of dimensions are applicable only when the load is purely radial. In practice, however, bearings are usually subjected to a composite load. As the table of dimensions is not directly applicable here, it is necessary to convert the values of the radial and axial loads into a single radial load value that would have an effect on the life of bearing equivalent to that of the actual load applied. This is known as the "dynamic equivalent radial load", and from this the life of the ball bearings for the unit is the calculated. The dynamic equivalent radial load is calculated by the following formula:

$$P_r = X \cdot F_r + Y \cdot F_a \quad \cdots\cdots (7.6)$$

where,
P_r: Dynamic equivalent radial load, N, lbf
F_r: Actual radial load, N, lbf
F_a: Actual axial load, N, lbf
X : Radial load factor
Y : Axial load factor

Values of X and Y are shown in Table 7.4 below.

Table 7.4 Dynamic equivalent radial load
$P_r = X \cdot F_r + Y \cdot F_a$

$\frac{f_o \cdot F_a}{C_{or}}$	e	$\frac{F_a}{F_r} \leqq e$		$\frac{F_a}{F_r} > e$	
		X	Y	X	Y
0.172	0.19				2.30
0.345	0.22				1.99
0.689	0.26				1.71
1.03	0.28				1.55
1.38	0.30	1	0	0.56	1.45
2.07	0.34				1.31
3.45	0.38				1.15
5.17	0.42				1.04
6.89	0.44				1.00

Note 1) The f_o factor for calculating equivalent radial load has been added to the dimensional tables in the catalog.
2) C_{or} is the basic static load rating. (See the table of dimensions.)
When the value of $\frac{f_o \cdot F_a}{C_{or}}$ or $\frac{F_a}{F_r}$ is not in conformity with those given in Table 7.4 above, find the value by interpolation.

7.3 Static equivalent radial load

In the case of a bearing which is stationary, rotates at a low speed of about 10 rpm, or makes slight oscillating movements, it is necessary to take into account the static equivalent radial load, which is the counterpart of the dynamic equivalent radial load of a rotating bearing. In this case, the following formula is used.

$$P_{or} = X_o \cdot F_r + Y_o \cdot F_a \quad \cdots\cdots (7.7)$$

where,
P_{or}: Static equivalent radial load, N, lbf
F_r : Actual radial load, N, lbf
F_a : Actual axial load, N, lbf
X_o : Static radial load factor
Y_o : Static axial load factor

With the ball bearings for the **NTN** unit, the values of X_o and Y_o are $X_o = 0.6$ $Y_o = 0.5$.
However when only radial load is involved, or when $F_a / F_r \leqq e$, the following values in used:

$$X_o = 1 \qquad Y_o = 0$$

Accordingly, the following equation holds.

$$P_{or} = F_r \quad \cdots\cdots (7.8)$$

8. Bearing Internal Clearance

8.1 Bearing internal clearance

Bearing internal clearance (initial clearance) is the amount of internal clearance a bearing has before being installed on a shaft or in a housing.

As shown in Fig. 8.1, when either the inner ring or the outer ring is fixed and the other ring is free to move, displacement can take place in either an axial or radial direction. This amount of displacement (radially or axially) is termed the internal clearance and, depending on the direction, is called the radial internal clearance or the axial internal clearance.

When the internal clearance of a bearing is measured, a slight measurement load is applied to the raceway so the internal clearance may be measured accurately. However, at this time, a slight amount of elastic deformation of the bearing occurs under the measurement load, and the clearance measurement value (measured clearance) is slightly larger than the true clearance. This discrepancy between the true bearing clearance and the increased amount due to the elastic deformation must be compensated for. These compensation values are given in Table 8.1.

The internal clearance values for each bearing class are shown in Tables 8.3.

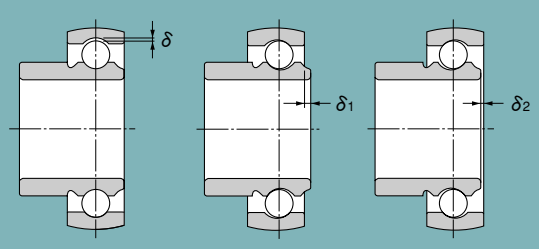

Radial clearance = δ Axial clearance = $\delta_1 + \delta_2$

Fig.8.1 Internal clearance

Table 8.1 Adjustment of radial internal clearance based on measured load Unit : μm

Nominal bore diameter d (mm)		Measuring load (N)	Radial clearance increase				
over	incl.		C2	CN	C3	C4	C5
10	18	24.5	3～4	4	4	4	4
18	50	49	4～5	5	6	6	6
50	200	147	6～8	8	9	9	9

8.2 Internal clearance selection

The internal clearance of a bearing under operating conditions (effective clearance) is usually smaller than the same bearing's initial clearance before being installed and operated. This is due to several factors including bearing fit, the difference in temperature between the inner and outer rings, etc. As a bearing's operating clearance has an effect on bearing life, heat generation, vibration, noise, etc.; care must be taken in selecting the most suitable operating clearance.

Effective internal clearance:

The internal clearance differential between the initial clearance and the operating (effective) clearance (the amount of clearance reduction caused by interference fits, or clearance variation due to the temperature difference between the inner and outer rings) can be calculated by the following formula:

$$\delta_{eff} = \delta_o - (\delta_f + \delta_t) \quad \cdots\cdots (8.1)$$

where,

δ_{eff}: Effective internal clearance, mm

δ_o: Bearing internal clearance, mm

δ_f: Reduced amount of clearance due to interference, mm

δ_t: Reduced amount of clearance due to temperature differential of inner and outer rings, mm

Reduced clearance due to interference:

When bearings are installed with interference fits on shafts and in housings, the inner ring will expand and the outer ring will contract; thus reducing the bearings' internal clearance. The amount of expansion or contraction varies depending on the shape of the bearing, the shape of the shaft or housing, dimensions of the respective parts, and the type of materials used. The differential can range from approximately 70% to 90% of the effective interference.

$$\delta_f = (0.70 \sim 0.90) \cdot \Delta_{deff} \quad \cdots\cdots (8.2)$$

where,

δ_f: Reduced amount of clearance due to interference, mm

Δ_{deff}: Effective interference, mm

Reduced internal clearance due to inner/outer ring temperature difference:

During operation, normally the outer ring will be from 5° to 10°C cooler than the inner ring or rotating parts. However, if the cooling effect of the housing is large, the shaft is connected to a heat source, or a heated substance is conducted through the hollow shaft; the temperature difference between the two rings can be even greater. The amount of internal clearance is thus further reduced by the differential expansion of the two rings.

$$\delta_t = \alpha \cdot \Delta_T \cdot D_o \quad \cdots\cdots (8.3)$$

where,

δ_t : Amount of reduced clearance due to heat differential, mm

α : Bearing steel linear expansion coefficient 12.5×10^{-6}/°C

ΔT : Inner/outer ring temperature differential, °C

D_o : Outer ring raceway diameter, mm

Outer ring raceway diameter, D_o, values can be approximated by using formula 8.4.

For ball bearings,

$$D_o = 0.20\ (d + 4.0D) \quad \cdots\cdots (8.4)$$

where,

d : Bearing bore diameter, mm

D : Bearing outside diameter, mm

8.3 Bearing internal clearance selection standards

Theoretically, in regard to bearing life, the optimum operating internal clearance for any bearing would be a slight negative clearance after the bearing had reached normal operating temperature.

Unfortunately, under actual operating conditions, maintaining such optimum tolerances is often difficult at best. Due to various fluctuating operating conditions this slight minus clearance can quickly become a large minus, greatly lowering the life of the bearing and causing excessive heat to be generated. Therefore, an initial internal clearance which will result in a slightly greater than negative internal operating clearance should be selected.

Under normal operating conditions (e.g. normal load, fit, speed, temperature, etc.), a standard internal clearance will give a very satisfactory operating clearance.

Table 8.2 lists non-standard clearance recommendations for various applications and operating conditions.

Table 8.2 Examples of applications where bearing clearances other than normal clearance are used

Operating conditions	Appilcations	Selected clearance
Shaft is heated and housing is cooled.	Conveyor of casting machine	C5
Shaft or inner ring is heated.	Annealing pit, Drying pit, Curing pit	C4
Allows for shaft deflection and fitting errors.	Disc harrows	C4
	Combines	C3
Tight-fitted for both inner and outer rings.	Large blowers	C3
To reduce noise and vibration when rotating.	Multi-wing fan of air conditioners	C2

Table 8.3 (1) Cylindrical bore bearings

Unit: μm/0.0001 inch

Nominal bore diameter d				Radial internal clearance																			
				C2				CN				C3				C4				C5			
over		incl.		min.		max.		min.		max.		min.		max.		min.		max.		min.		max.	
mm	inch	mm	inch	mm	inch	mm	inch	mm	inch	mm	inch	mm	inch	mm	inch	mm	inch	mm	inch	mm	inch	mm	inch
6	0.2362	10	0.3937	0	0	7	3	2	0.8	13	5	8	3	23	9	14	6	29	11	20	8	37	15
10	0.3937	18	0.7087	0	0	9	4	3	1	18	7	11	4	25	10	18	7	33	13	25	10	45	18
18	0.7087	24	0.9449	0	0	10	4	5	2	20	8	13	5	28	11	20	8	36	14	28	11	48	19
24	0.9449	30	1.1811	1	0	11	4	5	2	20	8	13	5	28	11	23	9	41	16	30	12	53	21
30	1.1811	40	1.5748	1	0	11	4	6	2	20	8	15	6	33	13	28	11	46	18	40	16	64	25
40	1.5748	50	1.9685	1	0	11	4	6	2	23	9	18	7	36	14	30	12	51	20	45	18	73	29
50	1.9685	65	2.5591	1	0	15	6	8	3	28	11	23	9	43	17	38	15	61	24	55	22	90	35
65	2.5591	80	3.1496	1	0	15	6	10	4	30	12	25	10	51	20	46	18	71	28	65	26	105	41
80	3.1496	100	3.9370	1	0	18	7	12	5	36	14	30	12	58	23	53	21	84	33	75	30	120	47
100	3.9370	120	4.7244	2	1	20	8	15	6	41	16	36	14	66	26	61	24	97	38	90	35	140	55
120	4.7244	140	5.5118	2	1	23	9	18	7	48	19	41	16	81	32	71	28	114	45	105	41	160	63

Note :Heat-resistant bearings with suffix HT2 have C4 clearances.

Table 8.3 (2) Tapered bore bearings

Unit: μm/0.0001 inch

Nominal bore diameter d				Radial internal clearance															
				C2				CN				C3				C4			
over		incl.		min.		max.		min.		max.		min.		max.		min.		max.	
mm	inch	mm	inch	mm	inch	mm	inch	mm	inch	mm	inch	mm	inch	mm	inch	mm	inch	mm	inch
24	0.9449	30	1.1811	5	2	20	8	13	5	28	11	23	9	41	16	30	12	53	21
30	1.1811	40	1.5748	6	2	20	8	15	6	33	13	28	11	46	18	40	16	54	25
40	1.5748	50	1.9685	6	2	23	9	18	7	36	14	30	12	51	20	45	18	73	29
50	1.9685	65	2.5591	8	3	28	11	23	9	43	17	38	15	61	24	55	22	90	35
65	2.5591	80	3.1496	10	4	30	12	25	10	51	20	46	18	71	28	65	26	105	41
80	3.1496	100	3.9370	12	5	36	14	30	12	58	23	53	21	84	33	75	30	120	47
100	3.9370	120	4.7244	15	6	41	16	36	14	66	26	61	24	97	38	90	35	140	55
120	4.7244	140	5.5118	18	7	48	19	41	16	81	32	71	28	114	45	105	41	160	63

Note :Heat-resistant bearings with suffix HT2 have C4 clearances.

9. Lubrication

As bearings in **NTN** bearing units have sufficient high-grade grease sealed in at the time of manufacture, there is no need for replenishment while in use. The amount of grease necessary for lubrication is, in general, very small. With the **NTN** bearing units, the amount of grease occupies about a half to a third of the space inside the bearing.

9.1 Allowable speed

The allowable speed while ensuring the safety and long life of ball bearings used in the unit is limited by their size, the circumferential speed at the point where the seal comes into contact, and the load acting on them.

To indicate the allowable speed , it is customary to use the value of dn or $d_m n$ (d is the bore of the bearing; d_m is the diameter of the pitch circle= (I.D.+O.D.) /2; n is the number of revolutions).

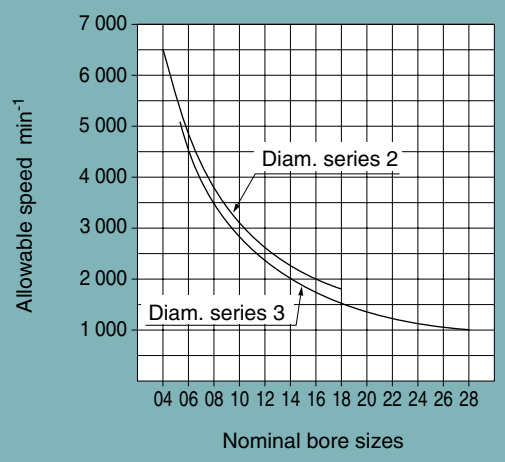

Fig.9.1

Problems connected with the lubrication of bearings are the generation of heat and seizures occurring at the sliding parts inside the bearing, in particular at the points where the ball is in contact with the retainer, inner and outer rings. The contact pressure at the points where friction occurs on the retainer is only slightly affected by the load acting on the bearing; the amount of heat generated there is approximately in proportion to the sliding velocity. Therefore, this sliding velocity serves as a yardstick to measure the limit of the rotating speed of the bearing. In the case of a bearing unit, however, there is another large factor that has to be taken into account– the circumferential speed at the part where the seal is in contact.

The graph in Fig. 9.1 indicates the allowable speed, taking into account the aforementioned factors.

There are two common methods of locking the bearing unit onto the shaft– the set screw system and the eccentric collar system. However, in both of these systems high-speed operation will cause deformation of the inner ring, which may result in vibration of the bearing. For high-speed operation, therefore, it is recommended that an interference fit or a clearance fit with a near-zero clearance be used, with a shaft of the larger size as shown later in this manual in Fig. 10.1, Fig. 10.5.

For standard bearing units with the contact type seal, the allowable speed is 120 000/d. Where a higher speed is required, bearing units with the non-contact type seal, are advised. Please contact **NTN** regarding the use of the latter type. Additionally, it is necessary that the surface on which the housing is mounted be finished to as a high a degree of accuracy as possible. A regularity of within ± 0.05mm, ± 0.002 inch is required.

Table 9.1 Brands of grease used in NTN bearing units

Bearing units	Grease		Symbols	Operating temperature range
	Thickening agent	Base oil		
Standard	Li soap	Mineral oil	D1	–15˚ to +100˚C, (+5˚ to +212˚F)
Heat-resistant	Li soap	Silicone oil	HT2D1	Normal temp. to +180˚C (356˚F)
Cold-resistant	Li soap	Silicone oil	CT1D1	–60˚C (-76˚F) to normal temp.

9.2 Replenishment of grease

9.2.1 Sealed-in grease

With **NTN** bearing units, no relubrication is the general rule. The standard self-lubricating type of bearing units contain high-grade lithium-based grease which, being suitable for long-term use, is ideal for sealed-type bearings. They also feature **NTN**'s unique sealing device. Relubrication, therefore, is unnecessary under most operating conditions.

At high temperatures, or where there is exposure to water or excessive dust, the highest quality grease is essential. Therefore, **NTN** uses its own specially selected brands which are shown in Table 9.1. It is necessary to use the same brand when replenishing grease.

9.2.2 Mixing of different kinds of grease

Whether or not different kinds of grease may be mixed usually depends on their thickeners. The commonly used criteria are shown in Table 9.2. Properties which are most susceptible to influences from mixing are viscosity, dropping point and penetration. Water and heat resisting properties as well as mechanical stability are also lowered. Therefore, when mixing in a grease which is different to that which is already in use, it is essential that the thickener (soap base) and the base oil be of the same group.

When relubricating **NTN** bearing units, it is advisable to use the brands of grease shown in Table 9.1.

Table 9.2 Mixing properties of grease

Soap base	Ca	Na	Al	Ba	Li
Ca	○	△	△	×	△
Na	△	○	△	×	×
Al	△	△	○	×	×
Ba	×	×	×	○	×
Li	△	×	×	×	○

○ Mixing will not produce any appreciable change of properties.
△ Mixing may produce considerable variations of properties.
× Mixing will cause a drastic change of properties.

9.2.3 Relubrication frequency

Relubrication frequency varies with the kind and quality of grease used as well as the operating conditions. Therefore, it is difficult to establish a general rule, but under ordinary operating conditions, it is desirable that grease be replenished before one third (1/3) of its calculated life elapses. It is necessary, however, to take into consideration such factors as hardening of grease in the oil hole, making replenishment impossible; deterioration of grease while operation of the machine is suspended, and so forth.

In Table 9.3 below are shown standard relubrication frequencies. Irrespective of the calculated life of the grease, this list takes into consideration such factors as the rotational speed of the bearings, operating temperatures and environmental conditions, with a view to safety.

9.2.4 Re-greasing

The performance of a bearing is greatly influenced by the quantity of grease. In order to avoid over-filling, it is advisable to replenish the grease while the machine is in operation.

Continue to insert grease until a little oozes out from between the outer ring raceway and the periphery of the slinger, for optimum performance.

Relubrication quantity is shown Table 9.4

Relubrication pressure : 1 ～ 2MPa {10 ～ 20kgf/cm^2}

Table 9.3 Standard relubrication frequencies

Type of unit	Symbol	dn Value ($d \times n$)	Environmental conditions	Operating temp. ℃, °F				Relubrication frequency	
								Hours	Period
Standard	D1	40 000 and below	Ordinary	−15 to	−80,	+5 to	+176	1 500 to 3 000	6 to 12 mo.
Standard	D1	70 000 and below	Ordinary	−15 to	+80,	+5 to	+176	1 000 to 2 000	3 to 6 mo.
Standard	D1	70 000 and below	Ordinary	+80 to	+100,	+176 to	+212	500 to 700	1 mo.
Heat-resistant	HT2D1	70 000 and below	Ordinary	+100 to	+150,	+212 to	+302	300 to 700	1 mo.
Heat-resistant	HT2D1	70 000 and below	Ordinary	+150 to	+180,	+302 to	+356	100	1 wk.
Cold-resistant	CT1D1	70 000 and below	Ordinary	−60 to	+80,	−76 to	+176	1 000 to 2 000	3 to 6 mo.
Standard	D1	70 000 and below	Very dusty	−15 to	+100,	+5 to	+212	100 to 500	1 wk. to 1 mo.
Standard	D1	70 000 and below	Exposed to water splashes	−15 to	+100,	+5 to	+212	30 to 100	1 day to 1 wk.

Table 9.4 Relubrication quantity

Unit gr

Bearing number		Quant.	Bearing number	Quant.
UC201D1		1.1	UC305D1	2.0
UC202D1		1.1	UC306D1	3.0
UC203D1		1.1	UC307D1	4.3
UC204D1		1.1	UC308D1	5.5
UC205D1		1.3	UC309D1	7.5
UC206D1	UCX05D1	1.9	UC310D1	10.5
UC207D1	UCX06D1	2.7	UC311D1	13
UC208D1	UCX07D1	3.5	UC312D1	16.5
UC209D1	UCX08D1	4.1	UC313D1	20
UC210D1	UCX09D1	4.6	UC314D1	23.5
UC211D1	UCX10D1	6.0	UC315D1	27.5
UC212D1	UCX11D1	8.5	UC316D1	33
UC213D1	UCX12D1	10.5	UC317D1	38
UC214D1	UCX13D1	12	UC318D1	45
UC215D1	UCX14D1	13	UC319D1	50
UC216D1	UCX15D1	15.5	UC320D1	60
UC217D1	UCX16D1	16.5	UC321D1	70
UC218D1	UCX17D1	21	UC322D1	85
	UCX18D1	22.5	UC324D1	100
	UCX20D1	35.5	UC326D1	125
			UC328D1	150

Note) Relubrication quantity of UK, UEL type is same as UC type.

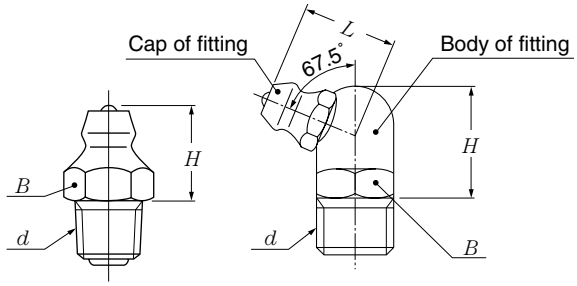

GA type GB type

9.3 Grease fitting

NTN bearing units are, as a general rule, provided with a grease fitting, as shown in Table 9.5, and a grease gun is used for regreasing. However, button-head and pin types may also be furnished on demand.

Grease fitting dimensions and the designation of applicable bearing units are given in Table 9.6.

Table 9.5 Grease fitting types available for bearing units

Types of housing	**NTN** standard grease fitting types
Pillow type	GA type
Flange type	GA type
Take-up type	GB type
Hanger type	GA type
Cartridge type	GA type

Table 9.6 Grease fitting dimensions and designations of applicable bearing units

GA type (Vertical type)

NTN Designation	*d*	*H* mm	*H* inch	*B* mm	*B* inch
GA-¼-28 UNF	¼-28 UNF	8.5	0.335	7	0.276
GA-PF⅛	G⅛	12	0.472	10	0.394
GA-PF¼	G¼	14	0.551	14	0.551

GB type (67.5°)

NTN Designation	*d*	*H* mm	*H* inch	*L* mm	*L* inch	*B* mm	*B* inch
GB-¼-28 UNF	¼-28 UNF	10.5	0.413	9.3	0.366	8	0.315
GB-PF⅛	G⅛	14.2	0.559	13.5	0.531	10	0.394
GB-PF¼	G¼	15	0.591	13.5	0.531	14	0.551

Nominal screw size *d*	Series 2	Series X	Series 3
¼-28 UNF	203-209	X05-X08	305-309
G⅛	210-215	X09-X14	310-315
G¼	216-218	X15-X20	316-328

Note:Screw size for the cartridge type is ¼ - 28 UNF.
That for C310D1 to C328D1 is G ⅛ (PF ⅛).

9.4 Standard location of the grease fitting

Standard location of grease fitting on the housing for the relubricatable bearing units of each type is illustrated below.

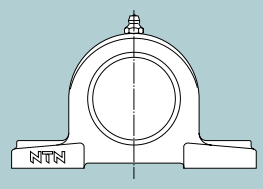	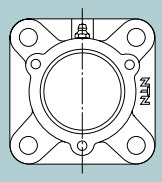	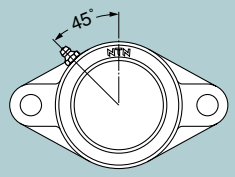	※ 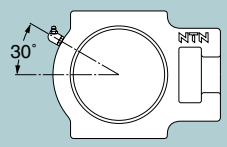
P, PL, PX, S-P, type	C-F type	FL, FLU, FLX, S-FL type	T, TX, S-T type
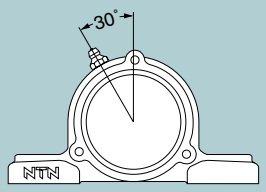	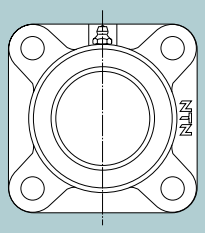 F, FU, S-F (#204, #205)	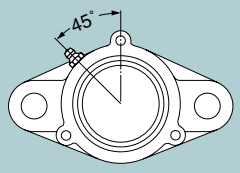	※ 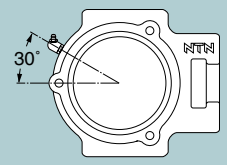
C-P type	FS type	C-FL type	C-T type
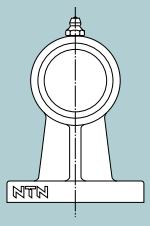	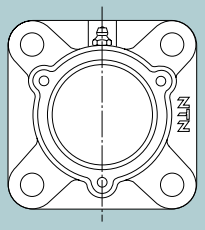	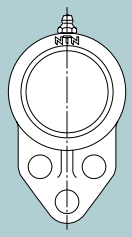	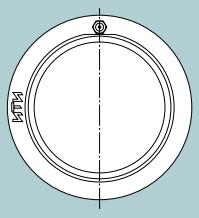
HP type	C-FS type	FH type	C, CX type
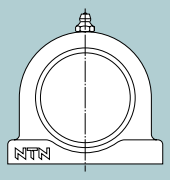	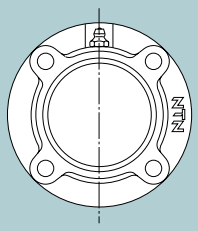	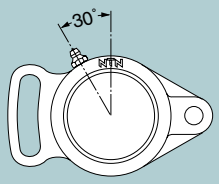	※ 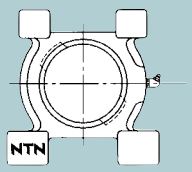
UP type	FC, FCX, S-FC type	FA type	M, L, S-M, S-L type
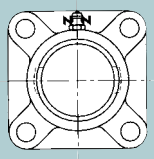 Except (#204, #205)	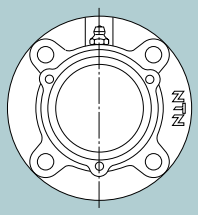	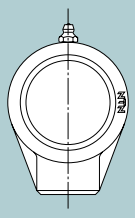	※ 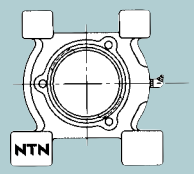
F, FU, FX, S-F type	C-FC type	HB type	C-M, C-L type

Note 1: Standard grease fitting type is GA. Item marked ※, however, have GB type as standard.
2: IPG, PE, PG, PM and PR type are categorized as P type.
3: FM, FE, FLG and FLR type are categorized as FL type.
4: FG and FSG type are categorized as FS type.
5: FCG type is categorized as FC type.
6: TG type is categorized as T type.

10. Shaft Designs

Although the shafts used for **NTN** bearing units require no particularly high standards of accuracy, it is desirable that, as far as possible, they be free from bends and flaws.

10.1 Set screw system bearing units

With set screw system bearing units, under normal operating conditions the inner ring is usually fitted onto the shaft by means of a clearance fit to ensure convenience of assembly. In this case the values shown in Fig. 10.1 are appropriate dimensional tolerances for the shaft.

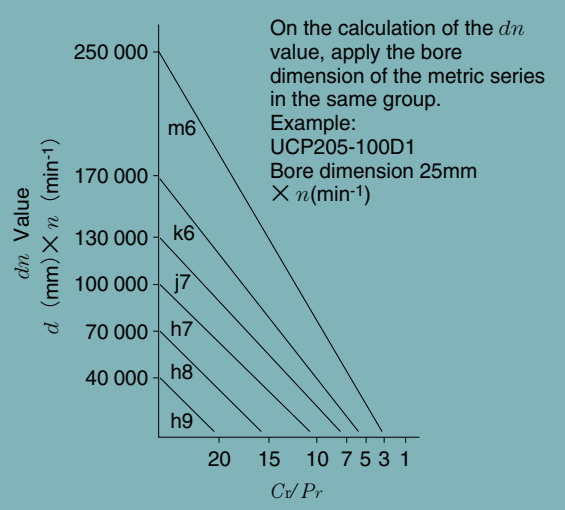

Fig. 10.1 Dimensional tolerance for the shaft for set screw system bearing units

Step shafts

Wherever there is a noticeably large axial load, a step shaft, as shown in Fig. 10.2, should, if practical, be used.

For bearing units with covers, it is recommended that the units shown in Table 10.1 be used with shafts of the corresponding diameters, as shown in the same table.

The values of the radii of the rounded corners of these shafts are shown in Table 10.2.

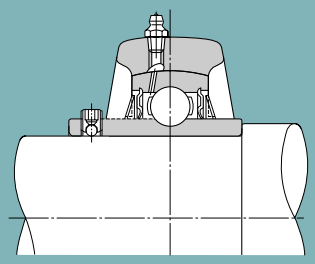

Fig.10.2

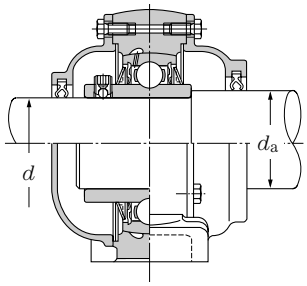

Table 10.1 Bearing units with covers (for use with step shafts) and shaft diameters

A) Metric series

Designation of units		d_a mm
10C-UCP206 to 10C-UCP218	10C-UCT208 to 10C-UCT217	d+10
10C-UCP305 to 10C-UCP311	10C-UCT305 to 10C-UCT311	d+10
15C-UCP312 to 15C-UCP324	15C-UCT312 to 15C-UCT324	d+15
20C-UCP326 to 20C-UCP328	20C-UCT326 to 20C-UCT328	d+20

Remarks : Designation of bearing units with blind covers.
Example : 10CM-UCP206D1

B) Inch series

Designation of units	d_a inch	Designation of units	d_a inch
ZnC-···206-···	1½	ZnC-···305-···	1⅜
ZnC-···207-···	1¾	ZnC-···306-···	1½
ZnC-···208-···	1⅞	ZnC-···307-···	1¾
ZnC-···209-···	2	ZnC-···308-···	1⅞
ZnC-···210-···	2⅜	ZnC-···309-···	2⅛
ZnC-···211-···	2½	ZnC-···310-···	2⅜
ZnC-···212-···	2¾	ZnC-···311-···	2¾
ZnC-···213-···	3	ZnC-···312-···	3
ZnC-···214-···	3⅛	ZnC-···313-···	3⅛
ZnC-···215-···	3⅜	ZnC-···314-···	3¼
ZnC-···216-···	3½	ZnC-···315-···	3½
ZnC-···217-···	3¾	ZnC-···316-···	3¾
ZnC-···218-···	4	ZnC-···317-···	4
		ZnC-···318-···	4

Note :Designations for all units differ from the normal numbering system.
Example 1 Pillow type : ZnC-UCP206-101D1
ZnCM-UCP206-101D1
Example 2 Flange type : ZnC-UCF206-101D1
ZnC-UCFL206-101D1
Example 3 Take-up type : ZnC-UCT206-101D1
ZnCM-UCT206-101D1
n indicates serial number in designing from 1 onward.

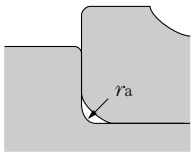

Table 10.2 Radii of the round corners of step shafts

Designation of bearings	r_{as} max. mm	inch	Designation of bearings	r_{as} max. mm	inch
UC201 to UC203	0.6	0.024	UC305 to UC306	1.5	0.059
UC204 to UC206	1	0.039	UC307 to UC309	2	0.079
UC207 to UC210	1.5	0.059	UC310 to UC311	2.5	0.098
UC211 to UC215	2	0.079	UC312 to UC316	2.5	0.098
UC216 to UC218	2.5	0.098	UC317 to UC324	3	0.118
			UC326 to UC328	4	0.157

Relief in the axial direction

Where several bearing units are fitted on the shaft, or where there is a great distance between two bearing units, one of the bearings is secured to the shaft as the "fixed-side bearing" and is subjected to both the axial and radial loads. The other is mounted on the shaft as the "free-side bearing" and is subjected only to radial load, compensating for expansion of the shaft due to a rise in temperature or for any errors in the distance between bearings that may have occurred during assembly.

If there is no free-side bearing, the bearings will be subjected to an abnormal axial load, which could cause premature breakdown.

Although it is desirable to use a cartridge-type bearing unit for the above purpose (Fig. 10.3), the following method is often employed. As illustrated in Fig. 10.4 (a) and (b), a key way is cut in the shaft, to accommodate a special set screw.

However, when the shaft speed is high, the dog point set screw may wear because of intensive vibration caused by the clearance between the bearing bore and the shaft. For this reason the dog point set screw is not suitable for blower type and similar applications. Please consult with **NTN** for alternatives.

When relief is provided in the axial direction by the use of screwed bolts as above, the dimensional relationships applicable are as shown in Tables 10.3 (a) and 10.3 (b) on the following pages.

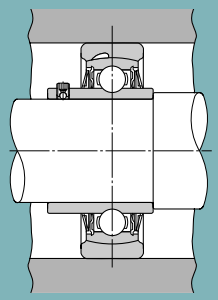

Fig.10.3

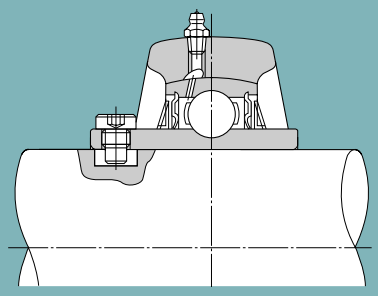

Fig.10.4 (a)

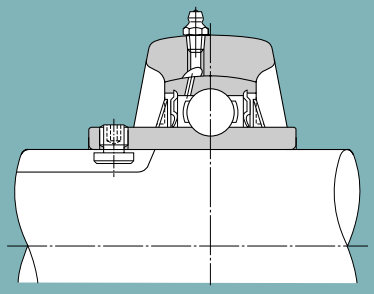

Fig.10.4 (b)

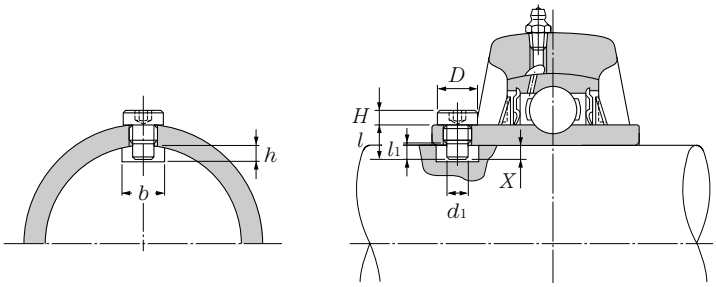

Table 10.3 (a) Screwed bolt system
A) Metric series, applied to metric bore size.

Designation of bearings	Key way		Designation and size of bolts	d_1	X	l	l_1	D	H
	Width b mm	Depth h mm		mm	mm	mm	mm	mm	mm
UC201D1W5	3.5	3	S5W5×0.8×11	3.5	2.2	11	5	6	3
UC202D1W5	3.5	4.5	S5W5×0.8×11	3.5	3.7	11	5	6	3
UC203D1W5	3.5	5.5	S5W5×0.8×11	3.5	4.7	11	5	6	3
UC204D1W5	3.5	4.5	S5W5×0.8×8.5	3.5	3.7	8.5	5	6	3
UC205D1W5	3.5	5	S5W5×0.8×8.5	3.5	4	8.5	5	6	3
UC206D1W5	4	5.5	S5W6×0.75×10	4	4.6	10	5.9	8	3
UC207D1W5	4	5	S5W6×0.75×10	4	4.1	10	5.9	8	3
UC208D1W5	6	5.5	S5W8×1×11.5	6	5	11.5	5.5	10	3
UC209D1W5	6	6	S5W8×1×11.5	6	5.2	11.5	5.5	10	3
UC210D1W5	6	6	S5W8×1×11.5	6	5.3	11.5	5.5	10	3
UC211D1W5	6	5.5	S5W8×1×11.5	6	4.5	11.5	5.5	10	3
UC212D1W5	7	5.5	S5W10×1.25×13.5	7	5	13.5	6.5	12	3
UC213D1W5	7	5.5	S5W10×1.25×13.5	7	4.8	13.5	6.5	12	3
UC214D1W5	7	5.5	S5W10×1.25×13.5	7	5	13.5	6.5	12	3
UC215D1W5	7	5	S5W10×1.25×13.5	7	4.5	13.5	6.5	12	3
UC216D1W5	7	6.5	S5W10×1.25×15	7	6	15	7	12	3
UC217D1W5	9	6.5	S5W12×1.5×16.5	9	5.8	16.5	7	14	4
UC218D1W5	9	6.5	S5W12×1.5×16.5	9	5.7	16.5	7	14	4
UC305D1W5	4	6.5	S5W6×0.75×11.5	4	5.6	11.5	6	8	3
UC306D1W5	4	5	S5W6×0.75×11.5	4	4.1	11.5	6	8	3
UC307D1W5	6	5	S5W8×1×11.5	6	4.3	11.5	5.5	10	3
UC308D1W5	7	6	S5W10×1.25×13.5	7	5.5	13.5	6.5	12	3
UC309D1W5	7	6.5	S5W10×1.25×15	7	5.8	15	7	12	3
UC310D1W5	9	7	S5W12×1.5×16.5	9	6.2	16.5	7	14	4
UC311D1W5	9	6.5	S5W12×1.5×16.5	9	5.7	16.5	7	14	4
UC312D1W5	9	6	S5W12×1.5×16.5	9	5.2	16.5	7	14	4
UC313D1W5	9	7	S5W12×1.5×18	9	6.4	18	7.5	14	4
UC314D1W5	9	6.5	S5W12×1.5×18	9	5.6	18	7.5	14	4
UC315D1W5	10	7.5	S5W14×1.5×20	10	6.9	20	8.5	17	5
UC316D1W5	10	7	S5W14×1.5×20	10	6.1	20	8.5	17	5
UC317D1W5	12	9	S5W16×1.5×23	12	8.3	23	9	19	6
UC318D1W5	12	8.5	S5W16×1.5×23	12	7.6	23	9	19	6
UC319D1W5	12	7.5	S5W16×1.5×23	12	6.8	23	9	19	6
UC320D1W5	14	8	S5W18×1.5×25	14	7.2	25	9.5	22	7
UC321D1W5	14	7	S5W18×1.5×25	14	6.4	25	9.5	22	7
UC322D1W5	14	9	S5W18×1.5×29	14	8.2	29	10	22	7
UC324D1W5	14	7	S5W18×1.5×29	14	6.4	29	10	22	7
UC326D1W5	16	9.5	S5W20×1.5×33	16	8.9	33	11	24	7
UC328D1W5	16	8.5	S5W20×1.5×33	16	7.8	33	11	24	7

Remarks: The tolerance for the width (b) of the key way should preferably be set at the range of 0 to +0.2 mm.

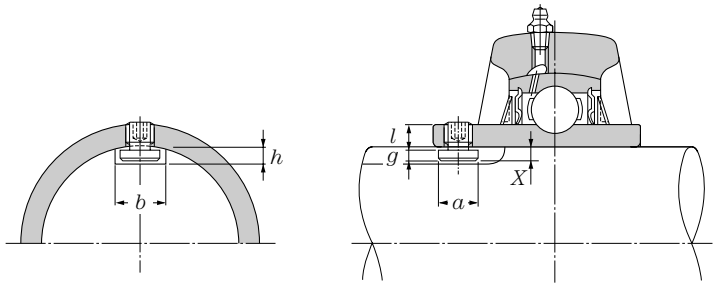

Table 10.3 (b) Key bolt system
A) Metric series, applied to metric bore size.

Designation of bearings	Key way		Designation and size of bolts	a mm	X mm	g mm	l mm
	Width b mm	Depth h mm					
UC201D1W6	6	4.5	S6W5×0.8×5-1	5.9	3.8	3	6
UC202D1W6	6	4.5	S6W5×0.8×5-1	5.9	3.6	3	6
UC203D1W6	6	4	S6W5×0.8×5-1	5.9	3.5	3	6
UC204D1W6	7	4.5	S6W5×0.8×5	6.9	3.8	3.2	6
UC205D1W6	7	4.5	S6W5×0.8×5	6.9	3.7	3.2	6
UC206D1W6	8	4.5	S6W6×0.75×6	7.9	3.7	3.2	7
UC207D1W6	8	4.5	S6W6×0.75×6	7.9	3.7	3.2	7
UC208D1W6	10	5	S6W8×1×7	9.9	4.2	3.6	8
UC209D1W6	10	5	S6W8×1×7	9.9	4.2	3.6	8
UC210D1W6	10	5	S6W8×1×7	9.9	4.1	3.6	8
UC211D1W6	10	5	S6W8×1×7	9.9	4	3.6	8
UC212D1W6	12	5.5	S6W10×1.25×9	11.9	4.6	4	10
UC213D1W6	12	5.5	S6W10×1.25×9	11.9	4.5	4	10
UC214D1W6	12	5.5	S6W10×1.25×9	11.9	4.5	4	10
UC215D1W6	12	5.5	S6W10×1.25×9	11.9	4.5	4	10
UC216D1W6	12	5.5	S6W10×1.25×9	11.9	4.4	4	10
UC217D1W6	14	6	S6W12×1.5×11	13.9	5.4	4.8	12
UC218D1W6	14	6	S6W12×1.5×11	13.9	5.3	4.8	12
UC305D1W6	8	4.5	S6W6×0.75×6	7.9	3.9	3.2	7
UC306D1W6	8	4.5	S6W6×0.75×6	7.9	3.7	3.2	7
UC307D1W6	10	5	S6W8×1×7	9.9	4.3	3.6	8
UC308D1W6	12	5.5	S6W10×1.25×9	11.9	4.9	4	10
UC309D1W6	12	5.5	S6W10×1.25×9	11.9	4.8	4	10
UC310D1W6	14	6.5	S6W12×1.5×11	13.9	5.8	4.8	12
UC311D1W6	14	6.5	S6W12×1.5×11	13.9	5.7	4.8	12
UC312D1W6	14	6.5	S6W12×1.5×11	13.9	5.6	4.8	12
UC313D1W6	14	6.5	S6W12×1.5×11	13.9	5.6	4.8	12
UC314D1W6	14	6.5	S6W12×1.5×11	13.9	5.5	4.8	12
UC315D1W6	16	7.5	S6W14×1.5×13	15.9	6.7	5.8	14
UC316D1W6	16	7.5	S6W14×1.5×13	15.9	6.6	5.8	14
UC317D1W6	18	8.5	S6W16×1.5×16	17.9	7.5	6.5	17
UC318D1W6	18	8.5	S6W16×1.5×16	17.9	7.4	6.5	17
UC319D1W6	18	8.5	S6W16×1.5×16	17.9	7.4	6.5	17
UC320D1W6	20	10.5	S6W18×1.5×18	19.9	9.5	8.5	19
UC321D1W6	20	10.5	S6W18×1.5×18	19.9	9.5	8.5	19
UC322D1W6	20	10.5	S6W18×1.5×18	19.9	9.4	8.5	19
UC324D1W6	20	10.5	S6W18×1.5×18	19.9	9.4	8.5	19
UC326D1W6	22	11	S6W20×1.5×25	21.9	10.4	9.5	26
UC328D1W6	22	11	S6W20×1.5×25	21.9	10.4	9.5	26

Note: The tolerance for the width (b) of the key way should preferably be set at the range of 0 to +0.2 mm.

10.2 Eccentric collar system

As in the case of the set screw system, it is usual under normal operating conditions to fit the inner ring onto the shaft by means of a clearance fit, for ease of assembly. Fig. 10.5 shows the appropriate values of dimensional tolerances for the shaft.

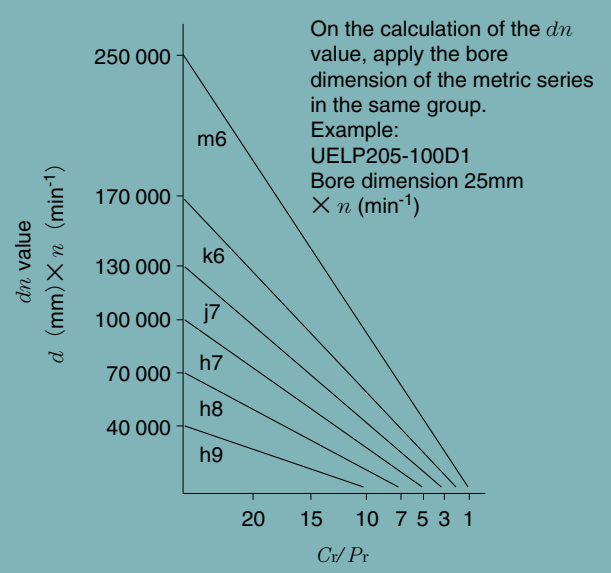

Fig 10.5 Dimensional tolerances for the shaft eccentric collar system bearing units

10.3 Adapter system bearing units

Since in the case of the adapter system, the bearing unit is fastened onto the shaft by means of a sleeve, for dimensional tolerances for the shaft, h9 is applicable under all operating conditions.

Note that it is not usable under a loose fit ≧ h9.

11. Handling of the Bearing Unit

11.1 Mounting of the housing

11.1.1 Pillow block type and flange type

Although an advantage of the **NTN** bearing unit is that it can be fitted easily and will function efficiently on any part of a machine, attention must be paid to the following points in order to ensure its normal service life.

1) The surface on which the housing is mounted must be sufficiently rigid.
2) The surface on which the housing is mounted should be as flat as possible (The housing should set firmly in its position). Deformation of the housing caused by incorrect mounting will in turn cause deformation of the bearing, leading to its premature breakdown.

Fig. 11.1

3) It is desirable that the angle between the surface on which the housing is mounted and the shaft be maintained to a tolerance of ± 2˚.

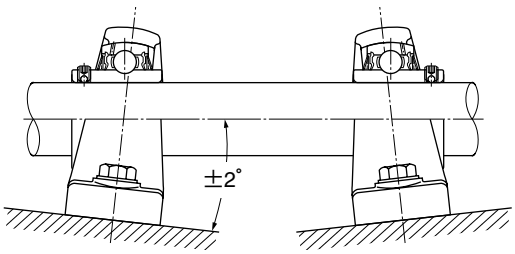

Fig. 11.2

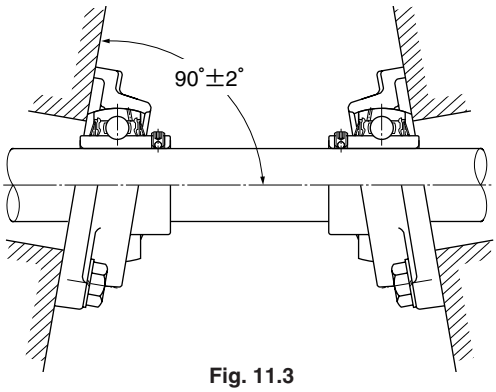

Fig. 11.3

4) Excessive tightening of the mounting bolts may cause the housing to deform. Tightening the bolts to the proper torque can avoid this issue. Also, **NTN** recommends using a washer with the bolt when mounting the housing as the bolt alone may cause damage to the housing.

Table 11.1 Recommended torques for tightening hexagon head bolt

Except Resin Housing

Bolt size	Tightening torques		Bolt size	Tightening torques	
	N·m	lbf·inch		N·m	lbf·inch
M6	5.4	48	M24	392	3 472
M8	13.8	122	M27	588	5 208
M10	27.5	243	M30	784	6 944
M12	47.1	417	M33	1 078	9 548
M14	76.5	677	M36	1 372	12 151
M16	118	1 042	M39	1 764	15 623
M18	162	1 432	M42	2 156	19 095
M20	226	1 996	M45	2 744	24 303
M22	314	2 777			

Resin Housing

Housing No.	Bolt size	Tightening torques		Housing No.	Bolt size	Tightening torques	
		N·m	lbf·inch			N·m	lbf·inch
PR204D1	M10	17.7	156	FLR204D1	M10	17.7	156
PR205D1	M10	24.5	217	FLR205D1	M10	24.5	217
PR206D1	M12	29.4	260	FLR206D1	M10	29.4	260
PR207D1	M12	35.3	312	FLR207D1	M12	35.3	312
PR208D1	M12	45.1	399	FLR208D1	M12	40.2	356

5) The pillow block type and flange type housings are provided with a seat for a dowel for accurate location. For the use of dowel pins, refer to Table 11.2.

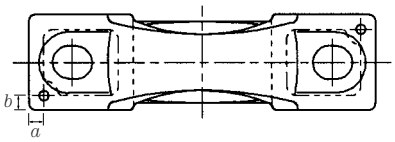

P, C-P

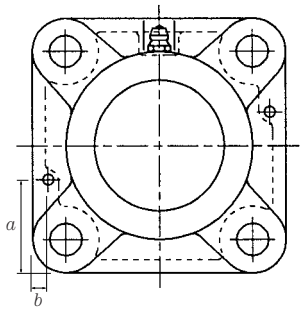

F

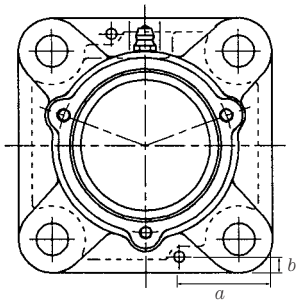

C-F

Table 11.2 Recommended dimensions of dowel pins

Designation of the housings		*a*		*b*		Recommended pin diameter	
		mm	inch	mm	inch	mm	inch
P203	—	5.5	0.216	5.5	0.216	3	0.118
P204	C-P204	5.5	0.216	5.5	0.216	3	0.118
P205	C-P205	5.5	0.216	5.5	0.216	3	0.118
P206	C-P206	5.5	0.216	5.5	0.216	3	0.118
P207	C-P207	5.5	0.216	5.5	0.216	3	0.118
P208	C-P208	7	0.276	7	0.276	5	0.197
P209	C-P209	7	0.276	7	0.276	5	0.197
P210	C-P210	7.5	0.295	7.5	0.295	5	0.197
P211	C-P211	7.5	0.295	7.5	0.295	5	0.197
P212	C-P212	9	0.354	9	0.354	7	0.276
P213	C-P213	9	0.354	9	0.354	7	0.276
P214	C-P214	9	0.354	9	0.354	7	0.276
P215	C-P215	9	0.354	9	0.354	7	0.276
P216	C-P216	10	0.394	10	0.394	7	0.276
P217	C-P217	12	0.472	12	0.472	10	0.394
P218	C-P218	12	0.472	12	0.472	10	0.394
P305	C-P305	8	0.315	8	0.315	4	0.157
P306	C-P306	8	0.315	8	0.315	4	0.157
P307	C-P307	10	0.394	10	0.394	5	0.197
P308	C-P308	10	0.394	10	0.394	5	0.197
P309	C-P309	10	0.394	10	0.394	5	0.197
P310	C-P310	12	0.472	12	0.472	6	0.236
P311	C-P311	12	0.472	12	0.472	6	0.236
P312	C-P312	14	0.551	14	0.551	6	0.236
P313	C-P313	14	0.551	14	0.551	6	0.236
P314	C-P314	14	0.551	14	0.551	6	0.236
P315	C-P315	17	0.669	17	0.669	8	0.315
P316	C-P316	17	0.669	17	0.669	8	0.315
P317	C-P317	17	0.669	17	0.669	8	0.315
P318	C-P318	17	0.669	17	0.669	8	0.315
P319	C-P319	17	0.669	17	0.669	8	0.315
P320	C-P320	17	0.669	17	0.669	8	0.315
P321	C-P321	17	0.669	17	0.669	8	0.315
P322	C-P322	19	0.748	19	0.748	10	0.394
P324	C-P324	19	0.748	19	0.748	10	0.394
P326	C-P326	23	0.906	23	0.906	12	0.472
P328	C-P328	23	0.906	23	0.906	12	0.472

Designation of the housings		*a*		*b*		Recommended pin diameter	
		mm	inch	mm	inch	mm	inch
F204	C-F204	33	1.229	6	0.236	4	0.157
F205	C-F205	35	1.378	6	0.236	4	0.157
F206	C-F206	35	1.378	6	0.236	4	0.157
F207	C-F207	38	1.496	7	0.276	5	0.197
F208	C-F208	40	1.575	8	0.315	5	0.197
F209	C-F209	43	1.693	8	0.315	5	0.197
F210	C-F210	49	1.929	8	0.315	5	0.197
F211	C-F211	49	1.929	8	0.315	5	0.197
F212	C-F212	49	1.929	8	0.315	5	0.197
F213	C-F213	52	2.047	9	0.354	6	0.236
F214	C-F214	52	2.047	9	0.354	6	0.236
F215	C-F215	52	2.047	9	0.354	6	0.236
F216	C-F216	55	2.165	12	0.472	6	0.236
F217	C-F217	55	2.165	12	0.472	6	0.236
F218	C-F218	61	2.402	14	0.551	6	0.236
F305	C-F305	35	1.378	6	0.236	4	0.157
F306	C-F306	40	1.575	6	0.236	4	0.157
F307	C-F307	47	1.805	8	0.315	5	0.197
F308	C-F308	48	1.890	8	0.315	5	0.197
F309	C-F309	48	1.890	8	0.315	5	0.197
F310	C-F310	48	1.890	8	0.315	5	0.197
F311	C-F311	51	2.008	10	0.394	5	0.197
F312	C-F312	51	2.008	10	0.394	5	0.197
F313	C-F313	57	2.244	10	0.394	6	0.236
F314	C-F314	61	2.402	10	0.394	6	0.236
F315	C-F315	65	2.559	8.5	0.335	6	0.236
F316	C-F316	65	2.559	8.5	0.335	6	0.236
F317	C-F317	70	2.756	9	0.354	6	0.236
F318	C-F318	80	3.150	10	0.394	8	0.315
F319	C-F319	80	3.150	10	0.394	8	0.315
F320	C-F320	80	3.150	10	0.394	8	0.315
F321	C-F321	80	3.150	10	0.394	8	0.315
F322	C-F322	90	3.543	10	0.394	8	0.315
F324	C-F324	90	3.543	13	0.512	10	0.394
F326	C-F326	100	3.937	13	0.512	10	0.394
F328	C-F328	108	4.252	13	0.512	10	0.394

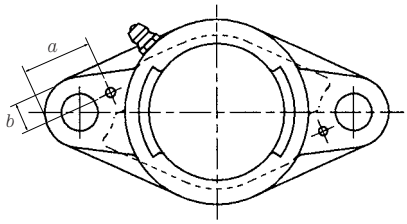

FL

Designation of the housings	a		b		Recommended pin diameter	
	mm	inch	mm	inch	mm	inch
FL204	22	0.866	10	0.394	4	0.157
FL205	32	1.260	10	0.394	4	0.157
FL206	33	1.299	12	0.472	4	0.157
FL207	30	1.181	14	0.551	5	0.197
FL208	33	1.299	15	0.591	5	0.197
FL209	38	1.496	15	0.591	5	0.197
FL210	39	1.535	16	0.630	5	0.197
FL211	44	1.732	18	0.709	5	0.197
FL212	54	2.126	19	0.748	5	0.197
FL213	53	2.087	18	0.709	6	0.236
FL214	53	2.087	18	0.709	6	0.236
FL215	55	2.165	21	0.827	6	0.236
FL216	55	2.165	21	0.827	6	0.236
FL217	55	2.165	21	0.827	6	0.236
FL218	55	2.165	22	0.866	6	0.236
FL305	35	1.378	9	0.354	4	0.157
FL306	44	1.732	11	0.433	4	0.157
FL307	43	1.693	13	0.512	5	0.197
FL308	45	1.772	15	0.591	5	0.197
FL309	51	2.008	18	0.709	5	0.197
FL310	55	2.165	15	0.591	5	0.197
FL311	55	2.165	15	0.591	5	0.197
FL312	60	2.363	18	0.709	5	0.197
FL313	59	2.323	24	0.945	6	0.236
FL314	63	2.480	24	0.945	6	0.236
FL315	66	2.598	23	0.906	6	0.236
FL316	72	2.835	27	1.063	6	0.236
FL317	74	2.913	29	1.142	6	0.236
FL318	74	2.913	29	1.142	8	0.315
FL319	80	3.150	30	1.181	8	0.315
FL320	84	3.307	30	1.181	8	0.315
FL321	84	3.307	30	1.181	8	0.315
FL322	84	3.307	36	1.417	8	0.315
FL324	93	3.661	38	1.496	10	0.394
FL326	94	3.701	39	1.535	10	0.394
FL328	102	4.016	40	1.575	10	0.394

11.1.2 Cartridge type

The inside diameter of the housing into which a cartridge type unit is inserted should be H7 under general operating conditions. It should be so furnished as to permit the bearing unit to move freely in the axial direction.

11.2 Mounting the bearing unit on the shaft

11.2.1 Mounting of the set screw system unit

To mount the set screw system bearing unit on the shaft, it is sufficient to tighten the two set screws uniformly.

The construction of the **NTN** "Ball-End Set Screw" is illustrated in Fig. 11.4 with the pin design that prevents it from becoming loose even when it is subjected to vibrations or impact loads.

If the fit clearance between the inner ring and the shaft is very small, it is advisable, prior to fastening on the screw, to file off that part of the shaft at which the end of the set screw (ball) strikes, by approximately 0.2 to 0.5mm 0.01 to 0.02 inches, to flatten it , as illustrated in Fig. 11.5.

This will facilitate dismounting of the bearing from the shaft should it become necessary.

The method of mounting the unit on the shaft is as follows:

1) Make certain that the end of the set screw is not protruding into the bore of the bearing.

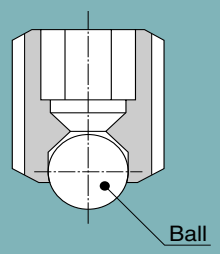

Fig. 11.4

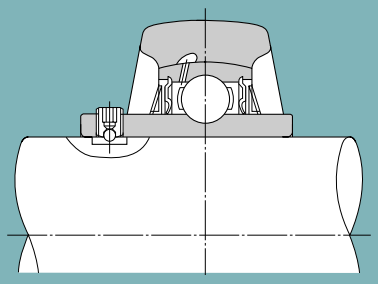

Fig. 11.5

2) Holding the unit at right angles to the shaft, insert the shaft into the bore of the bearing without twisting the bearing. Take care not to strike the slinger nor to subject the unit to any shock (Fig. 11.6).

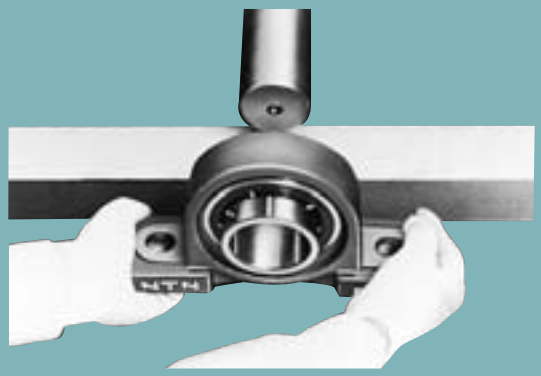

Fig. 11.6

3) Insert a hexagonal bar wrench securely into the hexagonal hole of the set screw, and tighten the two screws uniformly. Use the tightening torque shown in Table 11.3.

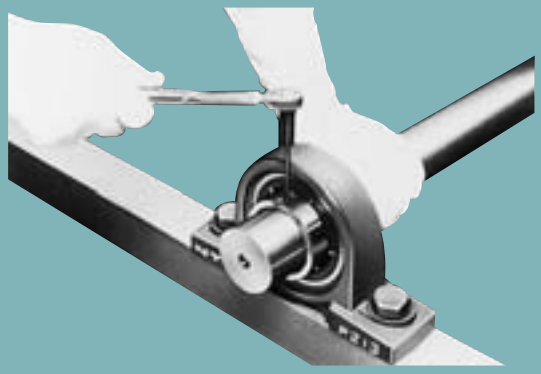

Fig. 11.7

4) Mount the housing securely in position on the machine. Sometimes the order of steps 3) and 4) is reversed.

Table 11.3 Recommended torques for tightening set screws

A) Metric series, applied to metric bore size.

Designation of the bearings of applicable units			Designation of set screws	Tightening torques N·m (max.)
UC201 to UC205	—	—	M 5×0.8 × 7	3.9
UC206	—	UC305 to UC306	M 6×0.75× 8	4.9
UC207	UCX05	—	M 6×0.75× 8	5.8
UC208 to UC210	—	—	M 8×1 ×10	7.8
UC211	UCX06 to UCX08	UC307	M 8×1 ×10	9.8
UC212	UCX09	—	M10×1.25×12	16.6
UC213 to UC215	—	UC308 to UC309	M10×1.25×12	19.6
UC216	UCX10	—	M10×1.25×12	22.5
—	UCX11 to UCX12	—	M10×1.25×12	24.5
UC217 to UC218	UCX13 to UCX15	UC310 to UC314	M12×1.5 ×13	29.4
—	UCX16 to UCX17	—	M12×1.5 ×13	34.3
—	UCX18	UC315 to UC316	M14×1.5 ×15	34.3
—	UCX20	UC317 to UC319	M16×1.5 ×18	53.9
—	—	UC320 to UC324	M18×1.5 ×20	58.8
—	—	UC326 to UC328	M20×1.5 ×25	78.4

B) Inch series, applied to inch bore size.

Designation of the bearings for the unit to which torques given are applicable			Designation of set screws	Tightening torques lbf· inch (max.)
UC201 to UC205	—	—	No.10-32UNF	34
UC206	—	UC305 to UC306	1/4-28UNF	43
UC207	UCX05	—	1/4-28UNF	52
UC208 to UC210	—	—	5/16-24UNF	69
UC211	UCX06 to UCX08	UC307	5/16-24UNF	86
UC212	UCX09	—	3/8-24UNF	147
UC213 to UC215	—	UC308 to UC309	3/8-24UNF	173
UC216	UCX10	—	3/8-24UNF	199
—	UCX11 to UCX12	—	3/8-24UNF	216
UC217 to UC218	UCX13 to UCX15	UC310 to UC314	1/2-20UNF	260
—	UCX16 to UCX17	—	1/2-20UNF	303
—	UCX18	UC315 to UC316	9/16-18UNF	303
—	UCX20	UC317 to UC319	5/8-18UNF	477
—	—	UC320	5/8-18UNF	520

Designation of the bearings of applicable units	Designation of set screws	Tightening torques N·m (max.)
AS201 to 205	M5×0.8 × 7	3.4
AS206	M6×0.75× 8	4.4
AS207	M6×0.75× 8	4.9
AS208 to 210	M8×1 ×10	6.8

Designation of the bearings for the unit to which torques given are applicable	Designation of set screws	Tightening torques lbf· inch (max.)
AS201 to 205	No.10-32UNF	30
AS206	1/4-28UNF	39
AS207	1/4-28UNF	43
AS208 to 210	5/16-24UNF	60

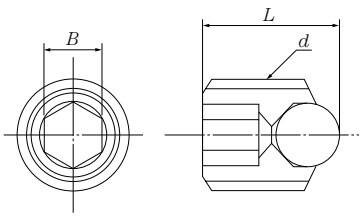

1) Standard ball-point set screw (mm size)

Units: mm

Part No.	d	L	B
MSS 5	M5×0.8	7	2.5
MSS 6	M6×0.75	8	3
MSS 8	M8×1.0	10	4
MSS10	M10×1.25	12	5
MSS12	M12×1.5	13	6
MSS14	M14×1.5	15	6
MSS16	M16×1.5	18	8
MSS18	M18×1.5	20	8
MSS20	M20×1.5	25	10

2) Standard ball-point set screw (inch size)

Units: mm

Part No.	d	L	B
S8W 4.826×32×7	No.10-32UNF	7	2.381
S8W 1/4×28×8	1/4 -28UNF	8	3.175
S8W 5/16×24×10	5/16 -24UNF	10	3.969
S8W 3/8×24×12	3/8 -24UNF	12	4.762
S8W 1/2×20×13	1/2 -20UNF	13	6.350
S8W 9/16×18×15	9/16 -18UNF	15	6.350
S8W 5/8×18×18	5/8 -18UNF	18	7.938
S8W 3/4×16×25	3/4 -16UNF	25	9.525

11.2.2 Mounting the eccentric locking collar system unit

In this system, unlike the screw system, the shaft and inner ring are fastened together by fastening the eccentric collar in the direction of the rotation of the shaft. They are fastened together securely, and deformation of the inner ring seldom occurs. This system, however, is not recommended for applications where the direction of rotation is sometimes reversed.

Directions for mounting the unit are as follows :

1) Make certain that the frame in which the housing is to be mounted is suitable to the operating conditions with regard to rigidity, flatness, etc.
2) Make sure that the end of the shaft is not burred and that the end of the set screw in the eccentric collar is not protruding from the interior surface of the collar (Fig. 11.8).

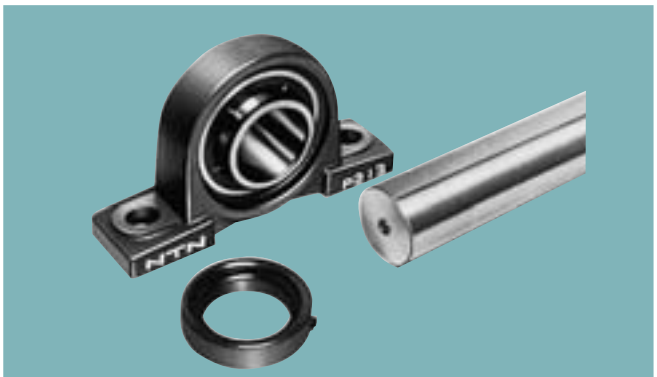

Fig. 11.8

3) Mount the housing of the unit securely onto the frame.
4) Determine the relative position of the unit and the shaft accurately so that the unit will not be subjected to any thrust, and then insert the eccentric collar (Fig. 11.9).

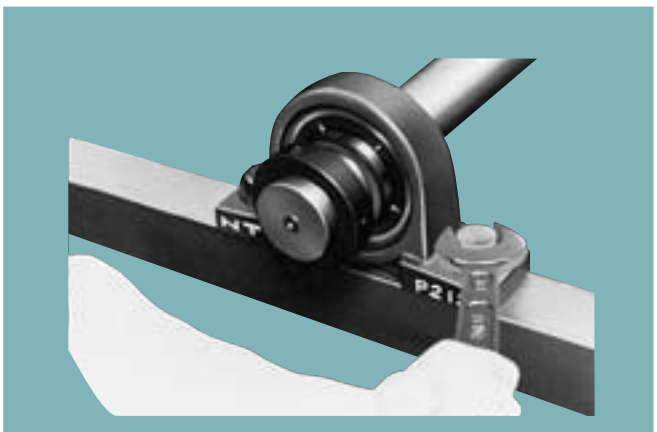

Fig. 11.9

5) Fit the eccentric circular ridge provided on the inner ring into the eccentric circular groove of the eccentric collar, and then provisionally tighten by turning the collar by hand in the direction of the shaft (Fig. 11.10).

Fig. 11.10

6) Insert a bar into the hole provided on the periphery of the eccentric collar and tap the bar so that the collar turns in the direction of rotation of the shaft (see Fig. 11.11).

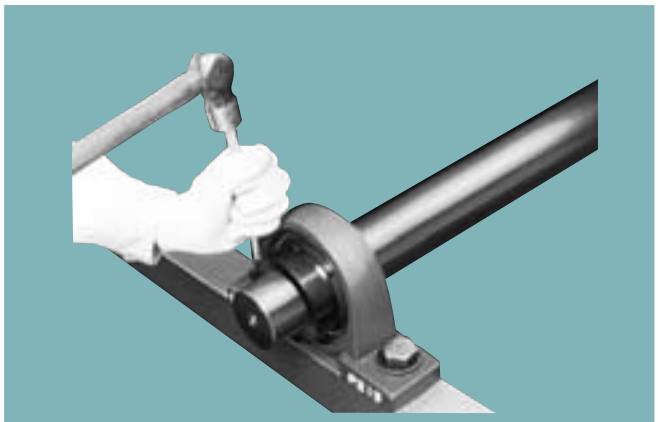

Fig. 11.11

7) Fasten the set screw of the eccentric collar onto the shaft. Recommended tightening torques are given in Table 11.4.

Table 11.4 Recommended torques for tightening set screws of the eccentric collar

A) Metric series, applied to metric bore size.

Designation of the bearings of applicable units			Designation of set screws	Tightening torques N·m (max.)
—	UEL204 to UEL205	AEL201 to AEL205	M 6×0.75× 8	7.8
UEL303 to UEL307	UEL206	AEL206	M 8×1 ×10	9.8
—	UEL207	AEL207	M10×1.25×12	11.7
—	UEL208 to UEL210	AEL208 to AEL210	M10×1.25×12	15.6
—	UEL211	AEL211	M10×1.25×12	19.6
UEL308 to UEL312	UEL212 to UEL215	AEL212	M10×1.25×12	29.4
UEL313 to UEL314	—	—	M12×1.5 ×13	34.3
UEL315 to UEL317	—	—	M16×1.5 ×18	53.9
UEL318 to UEL320	—	—	M20×1.5 ×25	78.4

B) Inch series, applied to inch bore size.

Designation of the bearings for the unit to which torques given are applicable			Designation of set screws	Tightening torques lbf· inch (max.)
—	UEL204 to UEL205	AEL201 to AEL205	1/4-28UNF	69
UEL303 to UEL307	UEL206	AEL206	5/16-24UNF	86
—	UEL207	AEL207	3/8-24UNF	104
—	UEL208 to UEL210	AEL208 to AEL210	3/8-24UNF	138
—	UEL211	AEL211	3/8-24UNF	173
UEL308 to UEL312	UEL212 to UEL215	AEL212	3/8-24UNF	260
UEL313 to UEL314	—	—	1/2-20UNF	350
UEL315 to UEL317	—	—	5/8-18UNF	520
UEL318 to UEL328	—	—	3/4-16UNF	700

11.2.3 Mounting of the adapter system unit

When an adapter system unit is used, there is no danger of the fit between the shaft and the inner ring working loose even if it is subjected to impact loads or vibration. Furthermore, straight shafts of h9 may be used under any operating conditions, except where there is a large axial load.

To mount the adapter system unit onto the shaft, the procedure is as follows:

1) Adjust the position of the sleeve so that the tapered part comes to about the center of the bearing. To facilitate the mounting of the sleeve onto the shaft, the opening in the sleeve can be widened using a screwdriver or similar implement. The sleeve should be positioned so that the nut is located on the opposite side from the pulley, etc., for easier handling (Fig. 11.12).

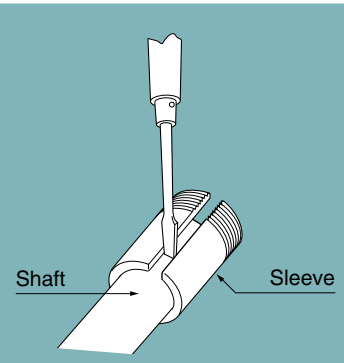

Fig. 11.12

2) Place the bearing unit with the tapered bore properly oriented on the sleeve and abut a cylindrical sleeve against the lock nut side face of the inner ring. Tap the adapter sleeve lightly over its entire periphery, as shown in Fig. 11.13, until a positive contact is made between the bearing and the sleeve.

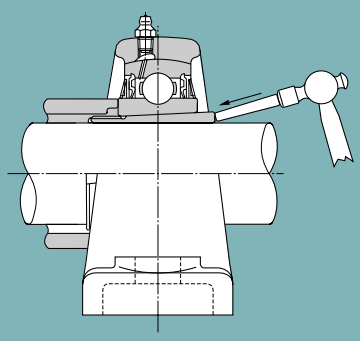

Fig. 11.13

3) Insert the washer and tighten the nut fully by hand.
4) Apply a jig (or screwdriver where no jig is available) to the notch of the nut and tap it with a hammer. Stop tapping after the nut has turned through from 60˚ to 90˚.
   Be careful not to strike the slinger.
   Care should also be taken not to over-tighten the nut, as this will deform the inner ring, causing heat generation and seizure.
5) Bend up the tab on the rim of the washer, which is in line with the notch of the nut. This will prevent the nut from turning. The nut must not be turned backwards to bring the notch into line with the tab on the washer.
6) Mount the housing securely in position on the machine.

11.2.4 Mounting covered bearing units

For selection of the shaft, mounting the bearing onto the shaft and fitting the housing follow the same procedure as for standard bearing units. Furthermore, fitting the cover presents no special difficulty, with no need for special tools or jigs.

The procedure for mounting covered bearing units is as follows:

1) Remove the cover from the bearing unit. The steel cover can usually be removed easily by hand, but should there be any difficulty due to an over-tight fit, insert a screwdriver or similar tool in a twisting motion, as shown in Fig. 11.14.

Fig. 11.14

2) In order to augment the dust and waterproofing effects, completely fill the space between the two lips of the rubber seal incorporated in the cover with grease, and apply grease to the inside of the cover, filling about two-thirds of the space. Cup grease is commonly used for this purpose (Fig. 11.15).
3) First, pass one of the two grease-packed covers along the shaft, and then slide the bearing unit onto the shaft and fix the inner ring fast on the shaft before tightening the bolts holding the housing. Sometimes these steps are reversed for convenience of assembly. It is recommended that the end of the shaft be chamfered beforehand to avoid damaging the lips of the rubber seal.
4) Next take the cover which has been passed along the shaft and press it into the housing as follows: Be careful not to strike the surface of the steel cover directly with a steel hammer but use a synthetic resin or wood block in between. Do not strike only in one place but tap the cover all the way round until it is firmly seated in the housing. (Fig. 11.16)
   The cast iron cover is fastened with three bolts.
5) Pack the second cover with grease as in step 2 and pass it along the shaft. In the case of a blind cover, the recess of the housing should be filled with grease (Fig. 11.15).
6) Fit the cover into the recess of the housing using the same procedure as detailed in Step 4) (Fig. 11.17).

Fig. 11.15

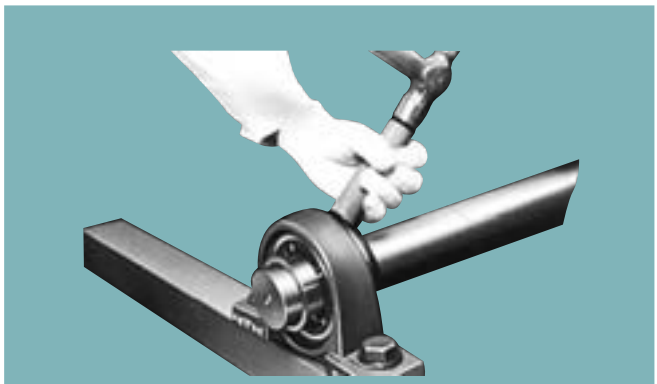
Fig. 11.16

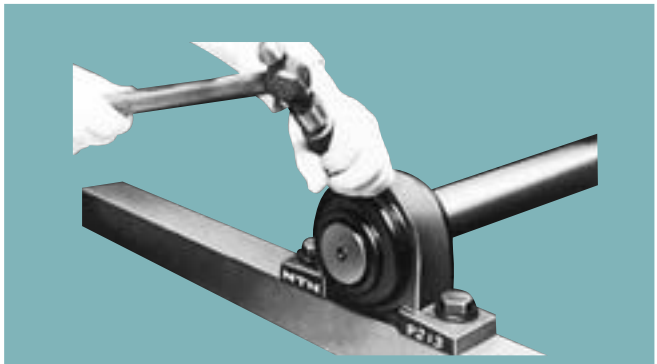
Fig. 11.17

11.2.5 Mounting resin covered bearing units

①Insert the edge of the dust cover in the housing's groove.
②Insert the other side of the dust cover in the opposite housing groove either by hand or with assistance of a plastic/rubber mallet/hammer.
③To remove the dust cover, pry the edge from the housing groove using a screw driver or similar tool.

※ Note: frequent mounting/dismounting of the dust cover may damage the edge of the housing and is not recommended.

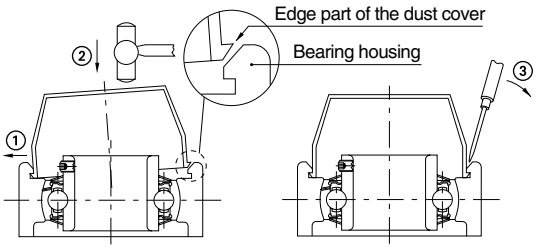

11.3 Running tests

After mounting the bearing unit, check that it has been done correctly.

First, turn the shaft or the rotor by hand to make certain that it rotates smoothly. If there is no irregularity, start up the machine. Run the machine at low speed under no load and gradually bring it up to full operating speed while checking that there are no abnormalities.

Some indications of abnormality or faulty assembly are as follows:

When the shaft is turned by hand a resistance or drag is felt, or the shaft appears to become heavy or light in turn. Or, if the machine is running under power, any abnormal noise, vibration or overheating is evident.

11.4 Inspection during operation

Although the **NTN** lubrication-free bearing unit does not require refilling with grease while in use, periodic inspections are necessary to ensure safe operation of the unit's most important parts. While the interval between inspections varies from case to case, according to the degree of importance and the rate of operation, it is usually some time between two weeks and a month.

Since the inside of the bearing can be examined only by removing the slinger, seal etc., the condition of the bearing should be judged by checking for the presence of vibration, noise, overheating of the housing, etc., while the machine is running.

11.5 Dismounting the bearing unit

If some abnormality makes it necessary to dismount the bearing unit from the shaft in order to replace it, the procedure used to mount the bearing is followed in reverse order. In this case, special care should be given to the following points:

1) Set screw system units:
If the set screw is protruding into the bore of the bearing when the unit is withdrawn from the shaft, it will damage the shaft. Therefore the screw should be turned back fully.

2) Adapter system units:
To remove an adapter system bearing unit from the shaft, raise the tab of the washer, turn the nut two or three turns back, and apply a metal block to the nut and tap it with a hammer. Do this all round the nut, until the sleeve can be moved (Fig. 11.18).
If the nut is turned back too far and the screws are only slightly engaged, tapping to remove it will eventually ruin the screws.

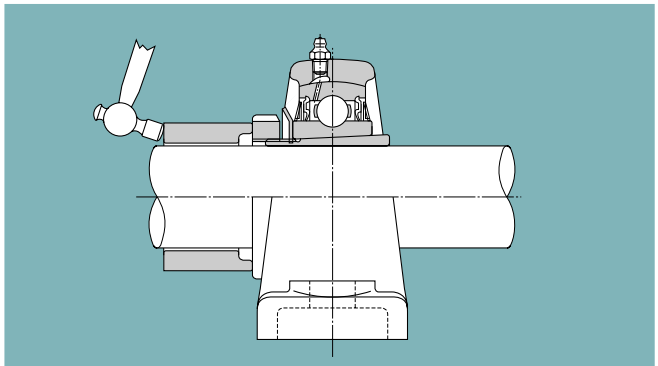

Fig. 11.18

11.6 Replacement of the bearing

If the bearing in the **NTN** bearing unit needs to be replaced, this can be carried out simply with a plummer block. There is no need to replace the housing, as it is reusable.

The bearing is changed using the following procedure: First, the set screw should be tightened as much as possible. Otherwise, there is a danger that it may catch in the housing when the bearing is tilted.

Next, insert the handle of a hammer or similar tool into the bore of the bearing and twist. Tilt the bearing through a full 90, and pull it in the direction of the notch on the housing to remove it. To install a new bearing in the housing, follow the same procedure in reverse.

Dimension Table

Set screw type (1)

				Page
Pillow blocks	Pillow blocks cast housing		UCP2 UCP3 UCPX	56 62 68
	Pillow blocks cast housing low center height		UCPL2 ASPL2	72 104
	Pillow blocks (Steel series)		UCPG2 UCPG3	76 78
	Pillow blocks (Stainless series)		F-UCPM2	80
	Pillow blocks (Plastic housing series)		F-UCPR2	82
	Thick pillow blocks cast housing		UCIP2 UCIP3	84 86
	Thick pillow blocks (Steel series)		UCIPG2, 3	90
	Pillow blocks cast housing high center height		UCHP2	92
	Narrow pillow blocks cast housing		UCUP2	96
	Light pillow blocks cast housing		ASPB2	100
	Pillow blocks ductile cast housing (Ductile series)		UCPE2	102
	Pillow blocks pressed steel housing		ASPP2 ASRPP2	108 110
Flanged units	Square flanged units cast housing		UCF2 UCF3 UCFX	112 118 124
	Square flanged units (Steel series)		UCFG2 UCFG3	130 132
	Square flanged units cast housing w/ spigot joint		UCFS3	134
	Square flanged units w/ spigot joint (Steel series)		UCFSG3	140
	Round flanged units cast housing w/ spigot joint		UCFC2 UCFCX	142 148
	Round flanged units w/ spigot joint (Steel series)		UCFCG2	154
	Rhombus flanged units cast housing		UCFL2 UCFL3 UCFLX	156 162 168
	Rhombus flanged units (Steel series)		UCFLG2 UCFLG3	170 172
	Rhombus flanged units (Stainless series)		F-UCFM2	174
	Rhombus flanged units (Plastic housing series)		F-UCFLR2	176
	Modified rhombus flanged units cast housing		UCFA2	178
	Modified flanged units cast housing		UCFH2	182
	Light rhombus flanged units cast housing	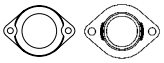	ASFB2 ASFD2	186 188

Set screw type (2)

				Page
Flanged units	Rhombus flanged units ductile cast housing (Ductile series)		UCFE2	190
	Round flanged units pressed steel housing		ASPF2 ASRPF2	192 194
	Rhombus flanged units pressed steel housing		ASPFL2	196
Hanger units	Hanger units cast housing		UCHB2	198
Take-up units	Take-up units cast housing		UCT2 UCT3 UCTX	202 208 214
	Take-up units (Steel series)		UCTG2 UCTG3	218 220
Cartridge units	Cartridge units cast housing		UCC2 UCC3 UCCX	222 224 227
Stretcher units	Mini stretcher units		ASPT2	229
	Take-up stretcher units		UCT2	394
	Type L stretcher units	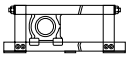	UCL2	396
	Type M stretcher units	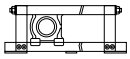	UCM2 UCM3	397 398

Eccentric locking collar type (1)

				Page
Pillow blocks	Pillow blocks cast housing		UELP2 UELP3	230 234
	Pillow blocks cast housing low center height		UELPL2 AELPL2 JELPL2	240 248 252
	Pillow blocks cast housing high center height		UELHP2	244
	Narrow pillow blocks cast housing		UELUP2	246
	Light pillow blocks cast housing		AELPB2	256
	Pillow blocks pressed steel housing		AELPP2 AELRPP2	258 260
Flanged units	Square flanged units cast housing		UELFU2 UELF2 UELF3	262 266 270
	Square flanged units cast housing w/ spigot joint		UELFS3	276
	Round flanged units cast housing w/ spigot joint		UELFC2	282
	Rhombus flanged units cast housing		UELFLU2 UELFL2 UELFL3	286 290 294
	Light rhombus flanged units cast housing	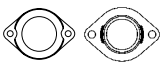	AELFB2 AELFD2 JELFD2	300 302 303

Eccentric locking collar type (2)

				Page
Flanged units	Round flanged units pressed steel housing		AELPF2 JELPF2 AELRPF2	304 306 308
	Rhombus flanged units pressed steel housing		AELPFL2 JELPFL2	310 312
Take-up units	Take-up units cast housing		UELT2 UELT3	314 318
Cartridge units	Cartridge units cast housing		UELC2 UELC3	324 326
Stretcher units	Mini stretcher units		AELPT2 JELPT2	330 331

Adapter type

				Page
Pillow blocks	Pillow blocks cast housing		UKP2 UKP3 UKPX	332 336 340
Flanged units	Square flanged units cast housing		UKF2 UKF3 UKFX	344 348 352
	Square flanged units cast housing w/ spigot joint		UKFS3	356
	Round flanged units cast housing w/ spigot joint		UKFC2 UKFCX	360 364
	Rhombus flanged units cast housing		UKFL2 UKFL3 UKFLX	368 372 376
Take-up units	Take-up units cast housing		UKT2 UKT3 UKTX	378 382 386
Cartridge units	Cartridge units cast housing		UKC2 UKC3 UKCX	390 391 393

Ball bearings

			Page
Set screw type		UC2 UC3 UCX F-UC2	400 406 412 416
		AS2	418
		AR2	422
		UCS2 UCS3	460 464
		ASS2	468
Eccentric locking collar type	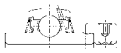	UEL2 UEL3	426 430
		AEL2	436
		JEL2	440
	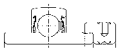	REL2	444
	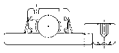	UELS2 UELS3	472 476
		AELS2	480
		JELS2	484
Adapter type		UK2 UK3 UKX	448 452 456
Tight fit type		CS2 CS3	488 489
Farm implement bearings		AS (Square bore)	490
		AC (Round bore)	498
		AH (Hex-bore)	504

Pillow blocks cast housing
Set screw type

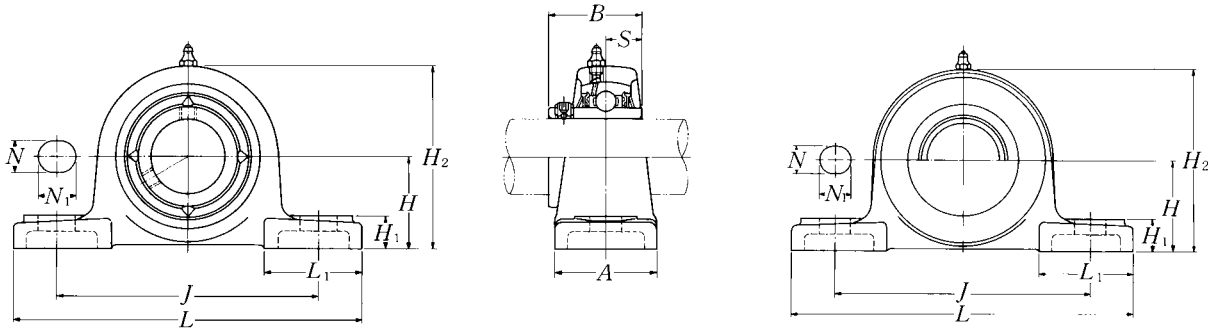

Pressed steel dust cover type
Open end: **S-UCP···D1**
Closed end: **SM-UCP···D1**

Shaft dia. mm / inch	Unit number [1]	Nominal dimensions (mm / inch) H	L	J	A	N	N1	H1	H2	L1	B	S	Bolt size mm / inch	Bearing number
12	UCP201D1	30.2	127	95	38	13	16	14	62	42	31	12.7	M10	UC201D1
1/2	UCP201-008D1	1 3/16	5	3 3/4	1 1/2	1/2	5/8	9/16	2 7/16	1 21/32	1.2205	0.500	3/8	UC201-008D1
15	UCP202D1	30.2	127	95	38	13	16	14	62	42	31	12.7	M10	UC202D1
9/16	UCP202-009D1	1 3/16	5	3 3/4	1 1/2	1/2	5/8	9/16	2 7/16	1 21/32	1.2205	0.500	3/8	UC202-009D1
5/8	UCP202-010D1													UC202-010D1
17	UCP203D1	30.2	127	95	38	13	16	14	62	42	31	12.7	M10	UC203D1
11/16	UCP203-011D1	1 3/16	5	3 3/4	1 1/2	1/2	5/8	9/16	2 7/16	1 21/32	1.2205	0.500	3/8	UC203-011D1
20	UCP204D1	33.3	127	95	38	13	16	14	65	42	31	12.7	M10	UC204D1
3/4	UCP204-012D1	1 5/16	5	3 3/4	1 1/2	1/2	5/8	9/16	2 9/16	1 21/32	1.2205	0.500	3/8	UC204-012D1
25	UCP205D1	36.5	140	105	38	13	16	15	71	42	34.1	14.3	M10	UC205D1
13/16	UCP205-013D1													UC205-013D1
7/8	UCP205-014D1	1 7/16	5 1/2	4 1/8	1 1/2	1/2	5/8	19/32	2 25/32	1 21/32	1.3425	0.563	3/8	UC205-014D1
15/16	UCP205-015D1													UC205-015D1
1	UCP205-100D1													UC205-100D1
30	UCP206D1	42.9	165	121	48	17	20	17	83	54	38.1	15.9	M14	UC206D1
1 1/16	UCP206-101D1													UC206-101D1
1 1/8	UCP206-102D1	1 11/16	6 1/2	4 3/4	1 7/8	21/32	25/32	21/32	3 9/32	2 1/8	1.5000	0.626	1/2	UC206-102D1
1 3/16	UCP206-103D1													UC206-103D1
1 1/4	UCP206-104D1													UC206-104D1
35	UCP207D1	47.6	167	127	48	17	20	18	93	54	42.9	17.5	M14	UC207D1
1 1/4	UCP207-104D1													UC207-104D1
1 5/16	UCP207-105D1	1 7/8	6 9/16	5	1 7/8	21/32	25/32	23/32	3 21/32	2 1/8	1.6890	0.689	1/2	UC207-105D1
1 3/8	UCP207-106D1													UC207-106D1
1 7/16	UCP207-107D1													UC207-107D1
40	UCP208D1	49.2	184	137	54	17	20	18	98	52	49.2	19	M14	UC208D1
1 1/2	UCP208-108D1	1 15/16	7 1/4	5 13/32	2 1/8	21/32	25/32	23/32	3 27/32	2 1/16	1.9370	0.748	1/2	UC208-108D1
1 9/16	UCP208-109D1													UC208-109D1
45	UCP209D1	54	190	146	54	17	20	20	106	60	49.2	19	M14	UC209D1
1 5/8	UCP209-110D1													UC209-110D1
1 11/16	UCP209-111D1	2 1/8	7 15/32	5 3/4	2 1/8	21/32	25/32	25/32	4 3/16	2 3/8	1.9370	0.748	1/2	UC209-111D1
1 3/4	UCP209-112D1													UC209-112D1

Remarks: 1) These numbers indicate relubricatable type. If maintenance free type is needed, please order without suffix "D1".
Note: Please refer to page 36 for size of grease fitting.

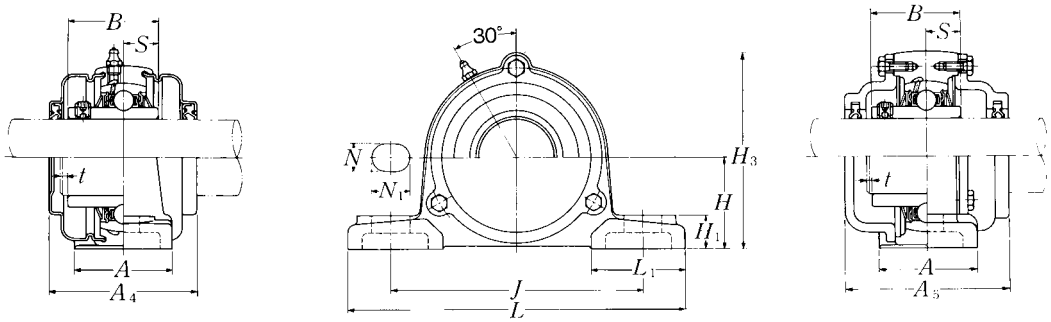

Cast dust cover type
Open end: **C-UCP···D1**
Closed end: **CM-UCP···D1**

Housing [1] number	Unit number [1] pressed steel dust cover type	Unit number [1] cast dust cover type	Nominal dimensions				Mass of unit		
				mm	inch			kg	lb
			t max.	A_4	H_3	A_5	UCP	S(SM)	C(CM)
P203D1	S(SM)-UCP201D1	C(CM)-UCP201D1	2	51	67	62	0.7	0.7	1.0
P203D1	S(SM)-UCP201-008D1	C(CM)-UCP201-008D1	5/64	2	2 5/8	2 7/16	1.5	1.5	2.2
P203D1	S(SM)-UCP202D1	C(CM)-UCP202D1	2	51	67	62	0.7	0.7	1.0
P203D1	S(SM)-UCP202-009D1	C(CM)-UCP202-009D1	5/64	2	2 5/8	2 7/16	1.5	1.5	2.2
P203D1	S(SM)-UCP202-010D1	C(CM)-UCP202-010D1							
P203D1	S(SM)-UCP203D1	C(CM)-UCP203D1	2	51	67	62	0.7	0.7	1.0
P203D1	S(SM)-UCP203-011D1	C(CM)-UCP203-011D1	5/64	2	2 5/8	2 7/16	1.5	1.5	2.2
P204D1	S(SM)-UCP204D1	C(CM)-UCP204D1	2	51	70	62	0.7	0.7	0.9
P204D1	S(SM)-UCP204-012D1	C(CM)-UCP204-012D1	5/64	2	2 3/4	2 7/16	1.5	1.5	2.0
P205D1	S(SM)-UCP205D1	C(CM)-UCP205D1	2	57	76	70	0.8	0.9	1.1
P205D1	S(SM)-UCP205-013D1	C(CM)-UCP205-013D1							
P205D1	S(SM)-UCP205-014D1	C(CM)-UCP205-014D1	5/64	2 1/4	3	2 3/4	1.8	2.0	2.4
P205D1	S(SM)-UCP205-015D1	C(CM)-UCP205-015D1							
P205D1	S(SM)-UCP205-100D1	C(CM)-UCP205-100D1							
P206D1	S(SM)-UCP206D1	C(CM)-UCP206D1	2	62	88	75	1.4	1.4	1.7
P206D1	S(SM)-UCP206-101D1	C(CM)-UCP206-101D1							
P206D1	S(SM)-UCP206-102D1	C(CM)-UCP206-102D1	5/64	2 7/16	3 15/32	2 15/16	3.1	3.1	3.8
P206D1	S(SM)-UCP206-103D1	C(CM)-UCP206-103D1							
P206D1	S(SM)-UCP206-104D1	C(CM)-UCP206-104D1							
P207D1	S(SM)-UCP207D1	C(CM)-UCP207D1	3	72	99	80	1.6	1.7	2.0
P207D1	S(SM)-UCP207-104D1	C(CM)-UCP207-104D1							
P207D1	S(SM)-UCP207-105D1	C(CM)-UCP207-105D1	1/8	2 27/32	3 29/32	3 5/32	3.5	3.7	4.4
P207D1	S(SM)-UCP207-106D1	C(CM)-UCP207-106D1							
P207D1	S(SM)-UCP207-107D1	C(CM)-UCP207-107D1							
P208D1	S(SM)-UCP208D1	C(CM)-UCP208D1	3	82	105	90	1.9	2.1	2.7
P208D1	S(SM)-UCP208-108D1	C(CM)-UCP208-108D1	1/8	3 7/32	4 1/8	3 17/32	4.2	4.6	6.0
P208D1	S(SM)-UCP208-109D1	C(CM)-UCP208-109D1							
P209D1	S(SM)-UCP209D1	C(CM)-UCP209D1	3	82	113	95	2.2	2.4	3.1
P209D1	S(SM)-UCP209-110D1	C(CM)-UCP209-110D1							
P209D1	S(SM)-UCP209-111D1	C(CM)-UCP209-111D1	1/8	3 7/32	4 7/16	3 3/4	4.9	5.3	6.8
P209D1	S(SM)-UCP209-112D1	C(CM)-UCP209-112D1							

Pillow blocks cast housing
Set screw type

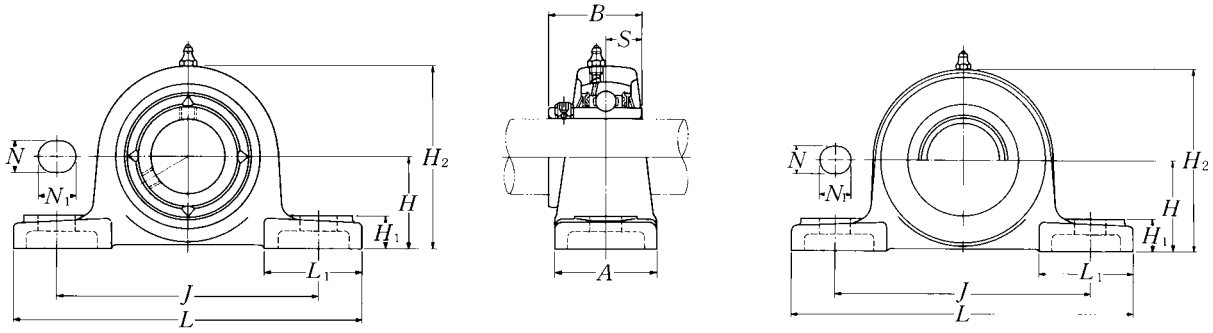

Pressed steel dust cover type
Open end: **S-UCP···D1**
Closed end: **SM-UCP···D1**

Shaft dia. mm / inch	Unit number [1]	Nominal dimensions mm / inch H	L	J	A	N	N1	H1	H2	L1	B	S	Bolt size mm / inch	Bearing number
50	UCP210D1	57.2	206	159	60	20	23	21	114	65	51.6	19	M16	UC210D1
1 13/16	UCP210-113D1													UC210-113D1
1 7/8	UCP210-114D1	2 1/4	8 1/8	6 1/4	2 3/8	25/32	29/32	13/16	4 1/2	2 9/16	2.0315	0.748	5/8	UC210-114D1
1 15/16	UCP210-115D1													UC210-115D1
2	UCP210-200D1													UC210-200D1
55	UCP211D1	63.5	219	171	60	20	23	23	126	65	55.6	22.2	M16	UC211D1
2	UCP211-200D1													UC211-200D1
2 1/16	UCP211-201D1	2 1/2	8 5/8	6 23/32	2 3/8	25/32	29/32	29/32	4 31/32	2 9/16	2.1890	0.874	5/8	UC211-201D1
2 1/8	UCP211-202D1													UC211-202D1
2 3/16	UCP211-203D1													UC211-203D1
60	UCP212D1	69.8	241	184	70	20	23	25	138	70	65.1	25.4	M16	UC212D1
2 1/4	UCP212-204D1													UC212-204D1
2 5/16	UCP212-205D1	2 3/4	9 1/2	7 1/4	2 3/4	25/32	29/32	31/32	5 7/16	2 3/4	2.5630	1.000	5 5/8	UC212-205D1
2 3/8	UCP212-206D1													UC212-206D1
2 7/16	UCP212-207D1													UC212-207D1
65	UCP213D1	76.2	265	203	70	25	28	27	151	77	65.1	25.4	M20	UC213D1
2 1/2	UCP213-208D1	3	10 7/16	8	2 3/4	31/32	1 3/32	1 1/16	5 15/16	3 1/32	2.5630	1.000	3/4	UC213-208D1
2 9/16	UCP213-209D1													UC213-209D1
70	UCP214D1	79.4	266	210	72	25	28	27	157	77	74.6	30.2	M20	UC214D1
2 5/8	UCP214-210D1													UC214-210D1
2 11/16	UCP214-211D1	3 1/8	10 15/32	8 9/32	2 27/32	31/32	1 3/32	1 1/16	6 3/16	3 1/32	2.9370	1.189	3/4	UC214-211D1
2 3/4	UCP214-212D1													UC214-212D1
75	UCP215D1	82.6	275	217	74	25	28	28	163	80	77.8	33.3	M20	UC215D1
2 13/16	UCP215-213D1													UC215-213D1
2 7/8	UCP215-214D1	3 1/4	10 13/16	8 17/32	2 29/32	31/32	1 3/32	1 3/32	6 13/32	3 5/32	3.0630	1.311	3/4	UC215-214D1
2 15/16	UCP215-215D1													UC215-215D1
3	UCP215-300D1													UC215-300D1
80	UCP216D1	88.9	292	232	78	25	28	30	175	85	82.6	33.3	M20	UC216D1
3 1/16	UCP216-301D1													UC216-301D1
3 1/8	UCP216-302D1	3 1/2	11 1/2	9 1/8	3 1/16	31/32	1 3/32	1 3/16	6 7/8	3 11/32	3.2520	1.311	3/4	UC216-302D1
3 3/16	UCP216-303D1													UC216-303D1

Remarks: 1) These numbers indicate relubricatable type. If maintenance free type is needed, please order without suffix "D1".
Note: Please refer to page 36 for size of grease fitting.

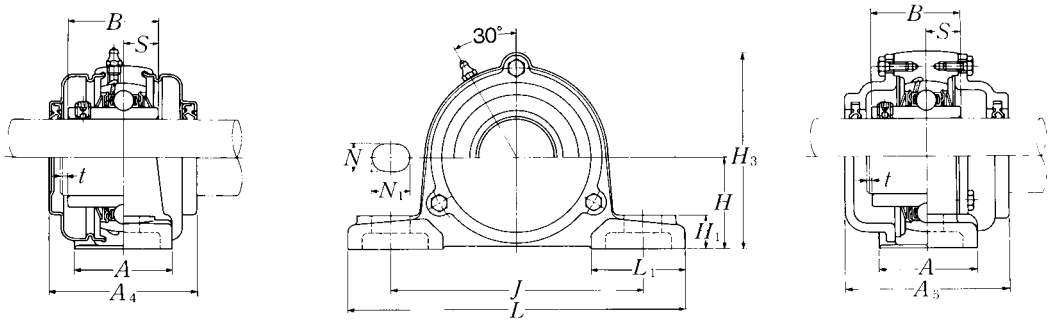

Cast dust cover type
Open end: **C-UCP···D1**
Closed end: **CM-UCP···D1**

Housing [1] number	Unit number [1] pressed steel dust cover type	Unit number [1] cast dust cover type	Nominal dimensions				Mass of unit		
				mm	inch		kg		lb
			t max.	A_4	H_3	A_5	UCP	S(SM)	C(CM)
P210D1	S(SM)-UCP210D1	C(CM)-UCP210D1	3	87	119	100	2.7	2.8	3.6
P210D1	S(SM)-UCP210-113D1	C(CM)-UCP210-113D1							
P210D1	S(SM)-UCP210-114D1	C(CM)-UCP210-114D1	1/8	3 7/16	4 11/16	3 15/16	6.0	6.2	7.9
P210D1	S(SM)-UCP210-115D1	C(CM)-UCP210-115D1							
P210D1	S(SM)-UCP210-200D1	C(CM)-UCP210-200D1							
P211D1	S(SM)-UCP211D1	C(CM)-UCP211D1	4	92	130	100	3.5	3.5	4.4
P211D1	S(SM)-UCP211-200D1	C(CM)-UCP211-200D1							
P211D1	S(SM)-UCP211-201D1	C(CM)-UCP211-201D1	5/32	3 5/8	5 1/8	3 15/16	7.7	7.7	9.7
P211D1	S(SM)-UCP211-202D1	C(CM)-UCP211-202D1							
P211D1	S(SM)-UCP211-203D1	C(CM)-UCP211-203D1							
P212D1	S(SM)-UCP212D1	C(CM)-UCP212D1	4	102	143	115	4.7	5.0	6.0
P212D1	S(SM)-UCP212-204D1	C(CM)-UCP212-204D1							
P212D1	S(SM)-UCP212-205D1	C(CM)-UCP212-205D1	5/32	4 1/32	5 5/8	4 17/32	10	11	13
P212D1	S(SM)-UCP212-206D1	C(CM)-UCP212-206D1							
P212D1	S(SM)-UCP212-207D1	C(CM)-UCP212-207D1							
P213D1	S(SM)-UCP213D1	C(CM)-UCP213D1	4	107	155	120	5.6	5.8	7.2
P213D1	S(SM)-UCP213-208D1	C(CM)-UCP211-208D1	5/32	4 7/32	6 3/32	4 23/32	12	13	16
P213D1	S(SM)-UCP213-209D1	C(CM)-UCP213-209D1							
P214D1	—	C(CM)-UCP214D1	4	—	162	135	6.5	—	8.3
P214D1		C(CM)-UCP214-210D1							
P214D1	—	C(CM)-UCP214-211D1	5/32	—	6 3/8	5 5/16	14	—	18
P214D1		C(CM)-UCP214-212D1							
P215D1	—	C(CM)-UCP215D1	4	—	168	135	7.2	—	9.3
P215D1		C(CM)-UCP215-213D1							
P215D1	—	C(CM)-UCP215-214D1	5/32	—	6 5/8	5 5/16	16	—	21
P215D1		C(CM)-UCP215-215D1							
P215D1		C(CM)-UCP215-300D1							
P216D1	—	C(CM)-UCP216D1	4	—	181	145	8.7	—	11
P216D1		C(CM)-UCP216-301D1							
P216D1	—	C(CM)-UCP216-302D1	5/32	—	7 1/8	5 23/32	19	—	24
P216D1		C(CM)-UCP216-303D1							

Pillow blocks cast housing
Set screw type

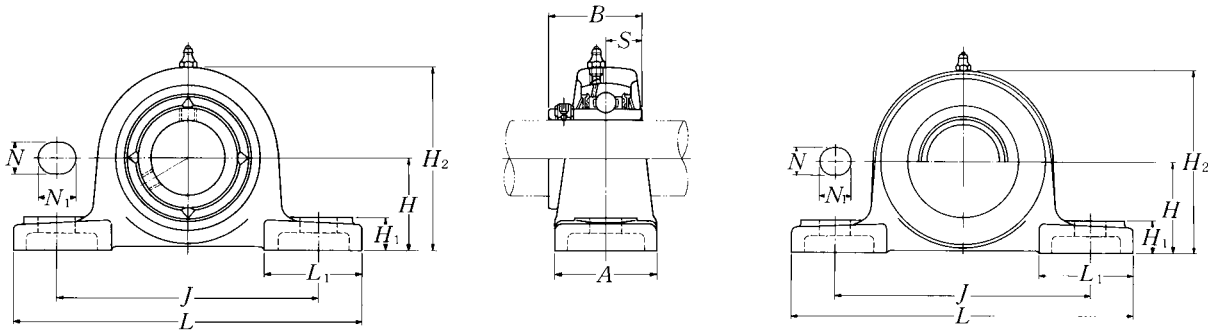

Pressed steel dust cover type
Open end: **S-UCP···D1**
Closed end: **SM-UCP···D1**

Shaft dia. mm / inch	Unit number [1]	Nominal dimensions mm / inch H	L	J	A	N	N_1	H_1	H_2	L_1	B	S	Bolt size mm / inch	Bearing number
85	**UCP217D1**	95.2	310	247	83	25	28	32	187	85	85.7	34.1	M20	UC217D1
3 1/4	**UCP217-304D1**													UC217-304D1
3 5/16	**UCP217-305D1**	3 3/4	12 7/32	9 23/32	3 9/32	31/32	1 3/32	1 1/4	7 3/8	3 11/32	3.3740	1.343	3/4	UC217-305D1
3 7/16	**UCP217-307D1**													UC217-307D1
90	**UCP218D1**	101.6	327	262	88	27	30	33	200	90	96	39.7	M22	UC218D1
3 1/2	**UCP218-308D1**	4	12 7/8	10 5/16	3 15/32	1 1/16	1 3/16	1 5/16	7 7/8	3 17/32	3.7795	1.563	7/8	UC218-308D1

Remarks: 1) These numbers indicate relubricatable type. If maintenance free type is needed, please order without suffix "D1".
Note: Please refer to page 36 for size of grease fitting.

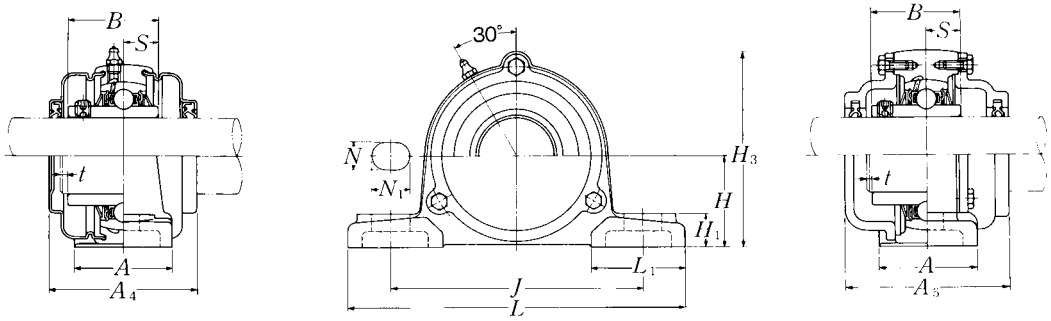

Cast dust cover type
Open end: **C-UCP···D1**
Closed end: **CM-UCP···D1**

Housing [1] number	Unit number [1] pressed steel dust cover type	Unit number [1] cast dust cover type	Nominal dimensions				Mass of unit		
			mm		inch		kg		lb
			t max.	A_4	H_3	A_5	UCP	S(SM)	C(CM)
P217D1	—	C(CM)-UCP217D1	5	—	191	155	11	—	13
P217D1	—	C(CM)-UCP217-304D1	13/64	—	7 17/32	6 3/32	24	—	29
P217D1	—	C(CM)-UCP217-305D1							
P217D1	—	C(CM)-UCP217-307D1							
P218D1	—	C(CM)-UCP218D1	5	—	204	165	13	—	16
P218D1	—	C(CM) UCP218-308D1	13/64	—	8 1/32	6 1/2	29	—	35

Pillow blocks cast housing
Set screw type

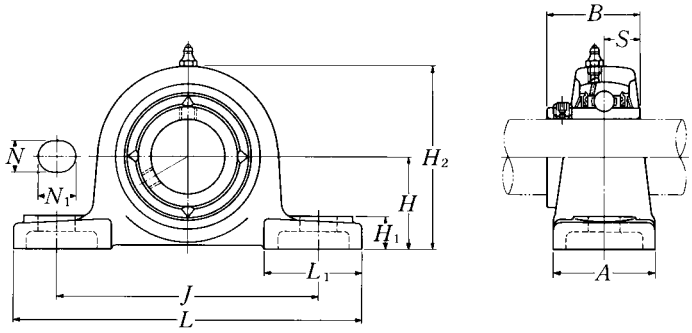

Shaft dia. mm / inch	Unit number [1]	Nominal dimensions mm / inch H	L	J	A	N	N1	H1	H2	L1	B	S	Bolt size mm / inch	Bearing number
25	UCP305D1	45	175	132	45	17	20	15	85	54	38	15	M14	UC305D1
13/16	UCP305-013D1													UC305-013D1
7/8	UCP305-014D1	1 49/64	6 7/8	5 3/16	1 25/32	21/32	25/32	19/32	3 11/32	2 1/8	1.4961	0.591	1/2	UC305-014D1
15/16	UCP305-015D1													UC305-015D1
1	UCP305-100D1													UC305-100D1
30	UCP306D1	50	180	140	50	17	20	18	95	54	43	17	M14	UC306D1
1 1/16	UCP306-101D1													UC306-101D1
1 1/8	UCP306-102D1	1 31/32	7 3/32	5 1/2	1 31/32	21/32	25/32	23/32	3 3/4	2 1/8	1.6929	0.669	1/2	UC306-102D1
1 3/16	UCP306-103D1													UC306-103D1
35	UCP307D1	56	210	160	56	17	25	20	106	60	48	19	M14	UC307D1
1 1/4	UCP307-104D1													UC307-104D1
1 5/16	UCP307-105D1	2 13/64	8 9/32	6 5/16	2 7/32	21/32	31/32	25/32	4 3/16	2 3/8	1.8898	0.748	1/2	UC307-105D1
1 3/8	UCP307-106D1													UC307-106D1
1 7/16	UCP307-107D1													UC307-107D1
40	UCP308D1	60	220	170	60	17	27	22	116	60	52	19	M14	UC308D1
1 1/2	UCP308-108D1	2 23/64	8 21/32	6 11/16	2 3/8	21/32	1 1/16	7/8	4 9/16	2 3/8	2.0472	0.748	1/2	UC308-108D1
1 9/16	UCP308-109D1													UC308-109D1
45	UCP309D1	67	245	190	67	20	30	24	129	65	57	22	M16	UC309D1
1 5/8	UCP309-110D1													UC309-110D1
1 11/16	UCP309-111D1	2 41/64	9 21/32	7 15/32	2 5/8	25/32	1 3/16	15/16	5 3/32	2 9/16	2.2441	0.866	5/8	UC309-111D1
1 3/4	UCP309-112D1													UC309-112D1
50	UCP310D1	75	275	212	75	20	35	27	143	75	61	22	M16	UC310D1
1 13/16	UCP310-113D1													UC310-113D1
1 7/8	UCP310-114D1	2 61/64	10 13/16	8 11/32	2 15/16	25/32	1 3/8	1 1/16	5 5/8	2 15/16	2.4016	0.866	5/8	UC310-114D1
1 15/16	UCP310-115D1													UC310-115D1
55	UCP311D1	80	310	236	80	20	38	30	154	85	66	25	M16	UC311D1
2	UCP311-200D1													UC311-200D1
2 1/16	UCP311-201D1	3 5/32	12 7/32	9 9/32	3 5/32	25/32	1 1/2	1 3/16	6 1/16	3 11/32	2.5984	0.984	5/8	UC311-201D1
2 1/8	UCP311-202D1													UC311-202D1
2 3/16	UCP311-203D1													UC311-203D1

Remarks: 1) These numbers indicate relubricatable type. If maintenance free type is needed, please order without suffix "D1".
Note: Please refer to page 36 for size of grease fitting.

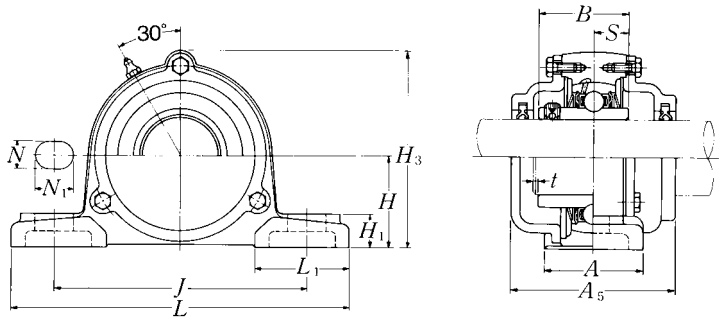

Cast dust cover type
Open end: **C-UCP···D1**
Closed end: **CM-UCP···D1**

Housing [1] number	Unit number [1] cast dust cover type	Nominal dimensions			Mass of unit	
		mm		inch	kg	lb
		t max.	H_3	A_5	UCP	C(CM)
P305D1	C(CM)-UCP305D1	2	91	80	1.4	1.8
P305D1	C(CM)-UCP305-013D1					
P305D1	C(CM)-UCP305-014D1	5/64	3 19/32	3 5/32	3.1	4.0
P305D1	C(CM)-UCP305-015D1					
P305D1	C(CM)-UCP305-100D1					
P306D1	C(CM)-UCP306D1	2	105	85	1.8	2.5
P306D1	C(CM)-UCP306-101D1					
P306D1	C(CM)-UCP306-102D1	5/64	4 1/8	3 11/32	4.0	5.5
P306D1	C(CM)-UCP306-103D1					
P307D1	C(CM)-UCP307D1	3	115	95	2.5	3.2
P307D1	C(CM)-UCP307-104D1					
P307D1	C(CM)-UCP307-105D1	1/8	4 17/32	3 3/4	5.5	7.1
P307D1	C(CM)-UCP307-106D1					
P307D1	C(CM)-UCP307-107D1					
P308D1	C(CM)-UCP308D1	3	125	105	3.1	4.0
P308D1	C(CM)-UCP308-108D1	1/8	4 29/32	4 1/8	6.8	8.8
P308D1	C(CM)-UCP308-109D1					
P309D1	C(CM)-UCP309D1	3	140	110	4.1	5.4
P309D1	C(CM)-UCP309-110D1					
P309D1	C(CM)-UCP309-111D1	1/8	5 1/2	4 11/32	9.0	12
P309D1	C(CM)-UCP309-112D1					
P310D1	C(CM)-UCP310D1	3	156	120	5.6	7.0
P310D1	C(CM)-UCP310-113D1					
P310D1	C(CM)-UCP310-114D1	1/8	6 5/32	4 23/32	12	15
P310D1	C(CM)-UCP310-115D1					
P311D1	C(CM)-UCP311D1	4	166	125	7.3	8.8
P311D1	C(CM)-UCP311-200D1					
P311D1	C(CM)-UCP311-201D1	5/32	6 17/32	4 29/32	16	19
P311D1	C(CM)-UCP311-202D1					
P311D1	C(CM)-UCP311-203D1					

Pillow blocks cast housing
Set screw type

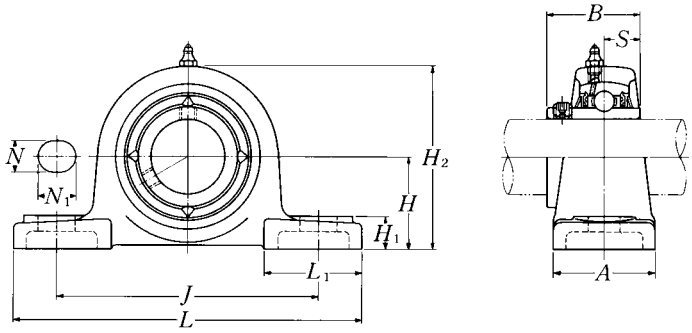

Shaft dia. mm / inch	Unit number [1]	Nominal dimensions mm / inch H	L	J	A	N	N1	H1	H2	L1	B	S	Bolt size mm / inch	Bearing number
60	UCP312D1	85	330	250	85	25	38	32	165	95	71	26	M20	UC312D1
2 1/4	UCP312-204D1													UC312-204D1
2 5/16	UCP312-205D1	3 11/32	13	9 27/32	3 11/32	31/32	1 1/2	1 1/4	6 1/2	3 3/4	2.7953	1.024	3/4	UC312-205D1
2 3/8	UCP312-206D1													UC312-206D1
2 7/16	UCP312-207D1													UC312-207D1
65	UCP313D1	90	340	260	90	25	38	33	176	105	75	30	M20	UC313D1
2 1/2	UCP313-208D1	3 35/64	13 3/8	10 1/4	3 17/32	31/32	1 1/2	1 5/16	6 15/16	4 1/8	2.9528	1.181	3/4	UC313-208D1
2 9/16	UCP313-209D1													UC313-209D1
70	UCP314D1	95	360	280	90	27	40	35	187	105	78	33	M22	UC314D1
2 5/8	UCP314-210D1													UC314-210D1
2 11/16	UCP314-211D1	3 47/64	14 3/16	11 1/32	3 17/32	1 1/16	1 9/16	1 3/8	7 3/8	4 1/8	3.0709	1.299	7/8	UC314-211D1
2 3/4	UCP314-212D1													UC314-212D1
75	UCP315D1	100	380	290	100	27	40	35	198	110	82	32	M22	UC315D1
2 13/16	UCP315-213D1													UC315-213D1
2 7/8	UCP315-214D1	3 15/16	14 31/32	11 13/32	3 15/16	1 1/16	1 9/16	1 3/8	7 25/32	4 11/32	3.2283	1.260	7/8	UC315-214D1
2 15/16	UCP315-215D1													UC315-215D1
3	UCP315-300D1													UC315-300D1
80	UCP316D1	106	400	300	110	27	40	40	210	110	86	34	M22	UC316D1
3 1/16	UCP316-301D1													UC316-301D1
3 1/8	UCP316-302D1	4 11/64	15 3/4	11 13/16	4 11/32	1 1/16	1 9/16	1 9/16	8 9/32	4 11/32	3.3858	1.339	7/8	UC316-302D1
3 3/16	UCP316-303D1													UC316-303D1
85	UCP317D1	112	420	320	110	33	45	40	220	120	96	40	M27	UC317D1
3 1/4	UCP317-304D1													UC317-304D1
3 5/16	UCP317-305D1	4 13/32	16 17/32	12 19/32	4 11/32	1 5/16	1 25/32	1 9/16	8 21/32	4 23/32	3.7795	1.575	1	UC317-305D1
3 7/16	UCP317-307D1													UC317-307D1
90	UCP318D1	118	430	330	110	33	45	45	235	120	96	40	M27	UC318D1
3 7/16	UCP318-307D1	4 41/64	16 15/16	13	4 11/32	1 5/16	1 25/32	1 25/32	9 1/4	4 23/32	3.7795	1.575	1	UC318-307D1
3 1/2	UCP318-308D1													UC318-308D1

Remarks: 1) These numbers indicate relubricatable type. If maintenance free type is needed, please order without suffix "D1".
Note: Please refer to page 36 for size of grease fitting.

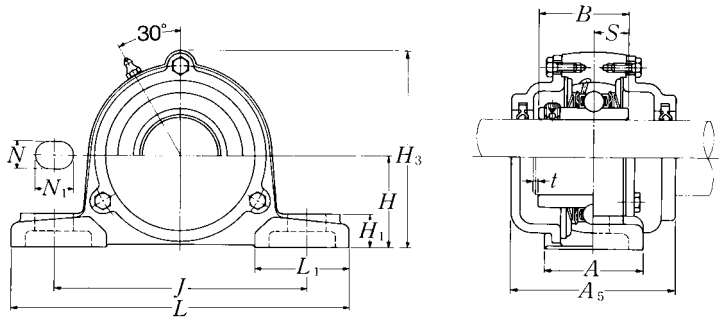

Cast dust cover type
Open end: **C-UCP···D1**
Closed end: **CM-UCP···D1**

Housing [1] number	Unit number [1] cast dust cover type	Nominal dimensions			Mass of unit	
		mm		inch	kg	lb
		t max.	H_3	A_5	UCP	C(CM)
P312D1	C(CM)-UCP312D1	4	179	135	9.4	11
P312D1	C(CM)-UCP312-204D1					
P312D1	C(CM)-UCP312-205D1	5/32	7 1/16	5 5/16	21	24
P312D1	C(CM)-UCP312-206D1					
P312D1	C(CM)-UCP312-207D1					
P313D1	C(CM)-UCP313D1	4	190	140	10	12
P313D1	C(CM)-UCP313-208D1	5/32	7 15/32	5 1/2	22	26
P313D1	C(CM)-UCP313-209D1					
P314D1	C(CM)-UCP314D1	4	200	140	12	14
P314D1	C(CM)-UCP314-210D1					
P314D1	C(CM)-UCP314-211D1	5/32	7 7/8	5 1/2	26	31
P314D1	C(CM)-UCP314-212D1					
P315D1	C(CM)-UCP315D1	4	210	150	14	17
P315D1	C(CM)-UCP315-213D1					
P315D1	C(CM)-UCP315-214D1	5/32	8 9/32	5 29/32	31	37
P315D1	C(CM)-UCP315-215D1					
P315D1	C(CM)-UCP315-300D1					
P316D1	C(CM)-UCP316D1	4	221	155	17	21
P316D1	C(CM)-UCP316-301D1					
P316D1	C(CM)-UCP316-302D1	5/32	8 11/16	6 3/32	37	46
P316D1	C(CM)-UCP316-303D1					
P317D1	C(CM)-UCP317D1	5	235	170	19	24
P317D1	C(CM)-UCP317-304D1					
P317D1	C(CM)-UCP317-305D1	13/64	9 1/4	6 11/16	42	53
P317D1	C(CM)-UCP317-307D1					
P318D1	C(CM)-UCP318D1	5	246	170	22	27
P318D1	C(CM)-UCP318-307D1	13/64	9 11/16	6 11/16	49	60
P318D1	C(CM)-UCP318-308D1					

Pillow blocks cast housing
Set screw type

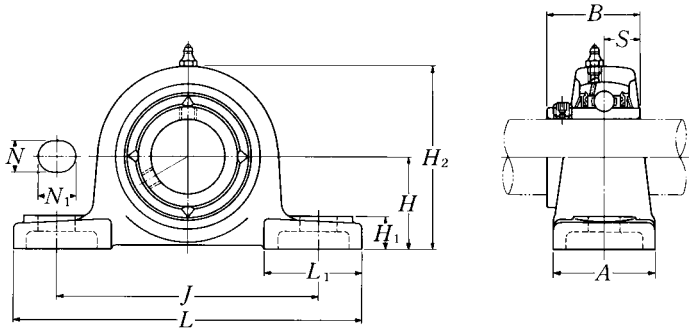

Shaft dia. mm / inch	Unit number [1]	Nominal dimensions mm / inch H	L	J	A	N	N1	H1	H2	L1	B	S	Bolt size mm / inch	Bearing number
95	UCP319D1	125	470	360	120	36	50	45	250	125	103	41	M30	UC319D1
3 5/8	UCP319-310D1													UC319-310D1
3 11/16	UCP319-311D1	4 59/64	18 1/2	14 3/16	4 23/32	1 13/32	1 31/32	1 25/32	9 27/32	4 29/32	4.0551	1.614	1 1/8	UC319-311D1
3 3/4	UCP319-312D1													UC319-312D1
100	UCP320D1	140	490	380	120	36	50	50	275	130	108	42	M30	UC320D1
3 13/16	UCP320-313D1													UC320-313D1
3 7/8	UCP320-314D1	5 33/64	19 9/32	14 31/32	4 23/32	1 13/32	1 31/32	1 31/32	10 13/16	5 1/8	4.2520	1.654	1 1/8	UC320-314D1
3 15/16	UCP320-315D1													UC320-315D1
4	UCP320-400D1													UC320-400D1
105	UCP321D1	140	490	380	120	36	50	50	280	130	112	44	M30	UC321D1
110	UCP322D1	150	520	400	140	40	55	55	300	135	117	46	M33	UC322D1
120	UCP324D1	160	570	450	140	40	55	65	320	140	126	51	M33	UC324D1
130	UCP326D1	180	600	480	140	40	55	75	355	140	135	54	M33	UC326D1
140	UCP328D1	200	620	500	140	40	55	75	390	140	145	59	M33	UC328D1

Remarks: 1) These numbers indicate relubricatable type. If maintenance free type is needed, please order without suffix "D1".
Note: Please refer to page 36 for size of grease fitting.

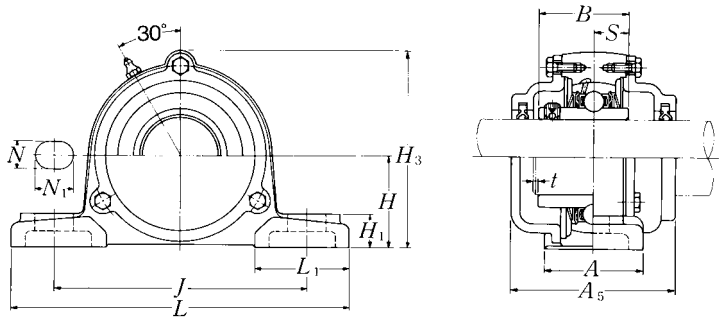

Cast dust cover type
Open end: **C-UCP···D1**
Closed end: **CM-UCP···D1**

Housing [1] number	Unit number [1] cast dust cover type	Nominal dimensions			Mass of unit	
		mm		inch	kg	lb
		t max.	H_3	A_5	UCP	C(CM)
P319D1	**C(CM)-UCP319D1**	5	258	180	26	32
P319D1	**C(CM)-UCP319-310D1**					
P319D1	**C(CM)-UCP319-311D1**	13/64	10 5/32	7 3/32	57	71
P319D1	**C(CM)-UCP319-312D1**					
P320D1	**C(CM)-UCP320D1**	5	283	190	33	39
P320D1	**C(CM)-UCP320-313D1**					
P320D1	**C(CM)-UCP320-314D1**	13/64	11 5/32	7 15/32	73	86
P320D1	**C(CM)-UCP320-315D1**					
P320D1	**C(CM)-UCP320-400D1**					
P321D1	**C(CM)-UCP321D1**	5	290	195	35	42
P322D1	**C(CM)-UCP322D1**	5	313	200	43	52
P324D1	**C(CM)-UCP324D1**	5	335	215	50	67
P326D1	**C(CM)-UCP326D1**	6	375	225	69	83
P328D1	**C(CM)-UCP328D1**	6	407	235	84	99

Pillow blocks cast housing
Set screw type

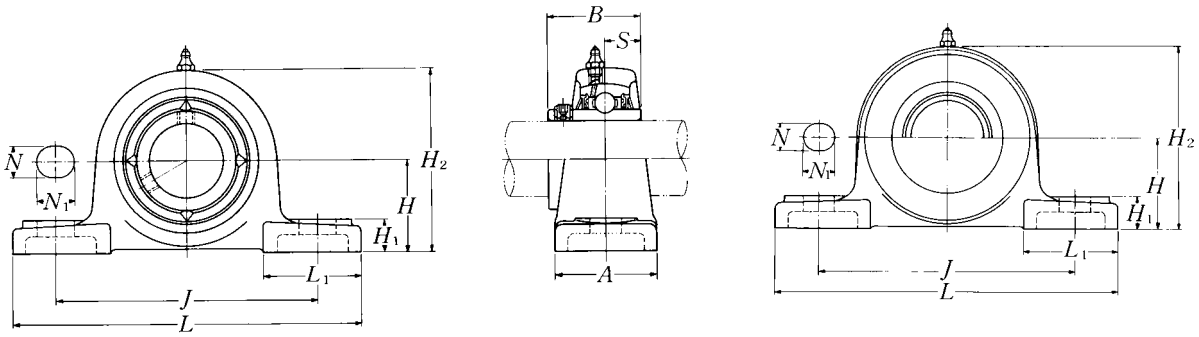

Pressed steel dust cover type
Open end: **S-UCPX···D1**
Closed end: **SM-UCPX···D1**

Shaft dia. mm / inch	Unit number [1]	Nominal dimensions mm / inch H	L	J	A	N	N1	H1	H2	L1	B	S	Bolt size mm / inch	Bearing number
25	UCPX05D1	44.4	159	119	51	17	20	18	85	50	38.1	15.9	M14	UCX05D1
13/16	UCPX05-013D1													UCX05-013D1
7/8	UCPX05-014D1	1 3/4	6 1/4	4 11/16	2	21/32	25/32	23/32	3 11/32	1 31/32	1.5000	0.626	1/2	UCX05-014D1
15/16	UCPX05-015D1													UCX05-015D1
1	UCPX05-100D1													UCX05-100D1
30	UCPX06D1	47.6	175	127	57	17	20	20	93	54	42.9	17.5	M14	UCX06D1
1 1/16	UCPX06-101D1													UCX06-101D1
1 1/8	UCPX06-102D1	1 7/8	6 7/8	5	2 1/4	21/32	25/32	25/32	3 21/32	2 1/8	1.6890	0.689	1/2	UCX06-102D1
1 3/16	UCPX06-103D1													UCX06-103D1
1 1/4	UCPX06-104D1													UC207-104D1
35	UCPX07D1	54	203	144	57	17	20	21	105	60	49.2	19	M14	UCX07D1
1 5/16	UCPX07-105D1													UCX07-105D1
1 3/8	UCPX07-106D1	2 1/8	8	5 21/32	2 1/4	21/32	25/32	13/16	4 1/8	2 3/8	1.9370	0.748	1/2	UCX07-106D1
1 7/16	UCPX07-107D1													UCX07-107D1
40	UCPX08D1	58.7	222	156	67	20	23	26	111	65	49.2	19	M16	UCX08D1
1 1/2	UCPX08-108D1	2 5/16	8 3/4	6 5/32	2 5/8	25/32	29/32	1 1/32	4 3/8	2 9/16	1.9370	0.748	5/8	UCX08-108D1
1 9/16	UCPX08-109D1													UCX08-109D1
45	UCPX09D1	58.7	222	156	67	20	23	26	116	65	51.6	19	M16	UCX09D1
1 5/8	UCPX09-110D1													UCX09-110D1
1 11/16	UCPX09-111D1	2 5/16	8 3/4	6 5/32	2 5/8	25/32	29/32	1 1/32	4 9/16	2 9/16	2.0315	0.748	5/8	UCX09-111D1
1 3/4	UCPX09-112D1													UCX09-112D1
1 13/16	UCPX09-113D1													UC210-113D1
50	UCPX10D1	63.5	241	171	73	20	23	27	126	70	55.6	22.2	M16	UCX10D1
1 7/8	UCPX10-114D1													UCX10-114D1
1 15/16	UCPX10-115D1	2 1/2	9 1/2	6 23/32	2 7/8	25/32	29/32	1 1/16	4 31/32	2 3/4	2.1890	0.874	5/8	UCX10-115D1
2	UCPX10-200D1													UC211-200D1
55	UCPX11D1	69.8	260	184	79	25	28	30	137	75	65.1	25.4	M20	UCX11D1
2 1/16	UCPX11-201D1													UCX11-201D1
2 1/8	UCPX11-202D1													UCX11-202D1
2 3/16	UCPX11-203D1	2 3/4	10 1/4	7 1/4	3 1/8	31/32	1 3/32	1 3/16	5 13/32	2 15/16	2.5630	1.000	3/4	UCX11-203D1
2 1/4	UCPX11-204D1													UC212-204D1
2 5/16	UCPX11-205D1													UC212-205D1

Remarks: 1) These numbers indicate relubricatable type. If maintenance free type is needed, please order without suffix "D1".
Note: Please refer to page 36 for size of grease fitting.

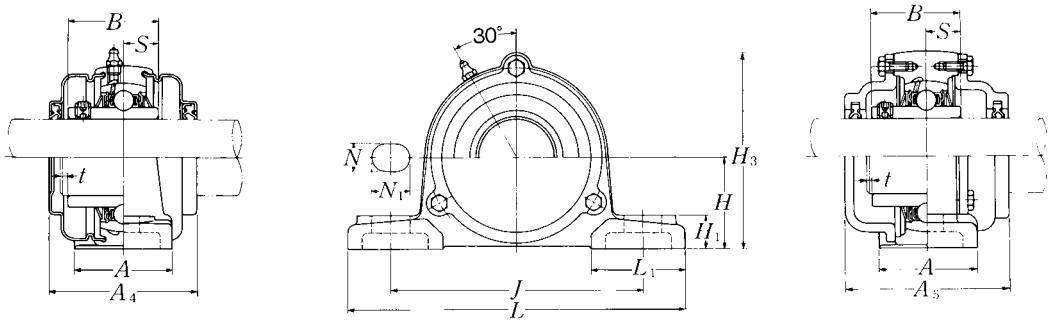

Cast dust cover type
Open end: **C-UCPX···D1**
Closed end: **CM-UCPX···D1**

Housing [1] number	Unit number [1] pressed steel dust cover type	Unit number [1] cast dust cover type	Nominal dimensions				Mass of unit		
			mm / inch				kg		lb
			t max.	A_4	H_3	A_5	UCPX	S(SM)	C(CM)
PX05D1	S(SM)-UCPX05D1	C(CM)-UCPX05D1	2	62	89	75	1.4	1.5	1.8
PX05D1	S(SM)-UCPX05-013D1	C(CM)-UCPX05-013D1							
PX05D1	S(SM)-UCPX05-014D1	C(CM)-UCPX05-014D1	5/64	2 7/16	3 1/2	2 15/16	3.1	3.3	4.0
PX05D1	S(SM)-UCPX05-015D1	C(CM)-UCPX05-015D1							
PX05D1	S(SM)-UCPX05-100D1	C(CM)-UCPX05-100D1							
PX06D1	S(SM)-UCPX06D1	C(CM)-UCPX06D1	2	72	99	80	1.9	2.0	2.4
PX06D1	S(SM)-UCPX06-101D1	C(CM)-UCPX06-101D1							
PX06D1	S(SM)-UCPX06-102D1	C(CM)-UCPX06-102D1	5/64	2 27/32	3 29/32	3 5/32	4.2	4.4	5.3
PX06D1	S(SM)-UCPX06-103D1	C(CM)-UCPX06-103D1							
PX06D1	S(SM)-UCPX06-104D1	C(CM)-UCPX06-104D1							
PX07D1	S(SM)-UCPX07D1	C(CM)-UCPX07D1	3	82	110	90	2.4	2.6	3.3
PX07D1	S(SM)-UCPX07-105D1	C(CM)-UCPX07-105D1							
PX07D1	S(SM)-UCPX07-106D1	C(CM)-UCPX07-106D1	1/8	3 7/32	4 11/32	3 17/32	5.3	5.7	7.3
PX07D1	S(SM)-UCPX07-107D1	C(CM)-UCPX07-107D1							
PX08D1	S(SM)-UCPX08D1	C(CM)-UCPX08D1	3	82	118	95	2.9	3.1	3.8
PX08D1	S(SM)-UCPX08-108D1	C(CM)-UCPX08-108D1	1/8	3 7/32	4 41/64	3 3/4	6.4	6.8	8.4
PX08D1	S(SM)-UCPX08-109D1	C(CM)-UCPX08-109D1							
PX09D1	S(SM)-UCPX09D1	C(CM)-UCPX09D1	3	87	120	100	3.2	3.5	4.2
PX09D1	S(SM)-UCPX09-110D1	C(CM)-UCPX09-110D1							
PX09D1	S(SM)-UCPX09-111D1	C(CM)-UCPX09-111D1	1/8	3 7/16	4 23/32	3 15/16	7.1	7.7	9.3
PX09D1	S(SM)-UCPX09-112D1	C(CM)-UCPX09-112D1							
PX09D1	S(SM)-UCPX09-113D1	C(CM)-UCPX09-113D1							
PX10D1	S(SM)-UCPX10D1	C(CM)-UCPX10D1	3	92	130	100	4.1	4.5	5.4
PX10D1	S(SM)-UCPX10-114D1	C(CM)-UCPX10-114D1							
PX10D1	S(SM)-UCPX10-115D1	C(CM)-UCPX10-115D1	1/8	3 5/8	5 1/8	3 15/16	9.0	9.9	12
PX10D1	S(SM)-UCPX10-200D1	C(CM)-UCPX10-200D1							
PX11D1	S(SM)-UCPX11D1	C(CM)-UCPX11D1	4	102	144	115	5.4	5.8	6.9
PX11D1	S(SM)-UCPX11-201D1	C(CM)-UCPX11-201D1							
PX11D1	S(SM)-UCPX11-202D1	C(CM)-UCPX11-202D1							
PX11D1	S(SM)-UCPX11-203D1	C(CM)-UCPX11-203D1	5/32	4 1/32	5 21/32	4 17/32	12	13	15
PX11D1	S(SM)-UCPX11-204D1	C(CM)-UCPX11-204D1							
PX11D1	S(SM)-UCPX11-205D1	C(CM)-UCPX11-205D1							

Pillow blocks cast housing
Set screw type

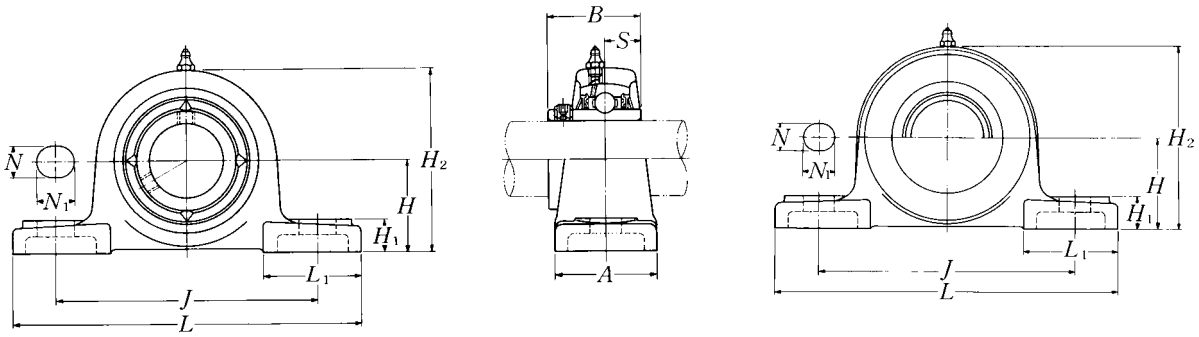

Pressed steel dust cover type
Open end: **S-UCPX···D1**
Closed end: **SM-UCPX···D1**

Shaft dia. mm / inch	Unit number [1]	Nominal dimensions mm / inch H	L	J	A	N	N1	H1	H2	L1	B	S	Bolt size mm / inch	Bearing number
60	UCPX12D1	76.2	286	203	83	25	28	33	151	80	65.1	25.4	M20	UCX12D1
2 3/8	UCPX12-206D1	3	11 1/4	8	3 9/32	31/32	1 3/32	1 5/16	5 15/16	3 5/32	2.5630	1.000	3/4	UCX12-206D1
2 7/16	UCPX12-207D1													UCX12-207D1
65	UCPX13D1	76.2	286	203	83	25	28	33	154	80	74.6	30.2	M20	UCX13D1
2 1/2	UCPX13-208D1	3	11 1/4	8	3 9/32	31/32	1 3/32	1 5/16	6 1/16	3 5/32	2.9370	1.189	3/4	UCX13-208D1
2 9/16	UCPX13-209D1													UCX13-209D1
70	UCPX14D1	88.9	330	229	89	27	30	35	170	95	77.8	33.3	M22	UCX14D1
2 5/8	UCPX14-210D1													UCX14-210D1
2 11/16	UCPX14-211D1	3 1/2	13	9 1/32	3 1/2	1 1/16	1 3/16	1 3/8	6 11/16	3 3/4	3.0630	1.311	7/8	UCX14-211D1
2 3/4	UCPX14-212D1													UCX14-212D1
75	UCPX15D1	88.9	330	229	89	27	30	35	175	95	82.6	33.3	M22	UCX15D1
2 13/16	UCPX15-213D1													UCX15-213D1
2 7/8	UCPX15-214D1	3 1/2	13	9 1/32	3 1/2	1 1/16	1 3/16	1 3/8	6 7/8	3 3/4	3.2520	1.311	7/8	UCX15-214D1
2 15/16	UCPX15-215D1													UCX15-215D1
3	UCPX15-300D1													UCX15-300D1
80	UCPX16D1	101.6	381	283	102	27	30	40	194	110	85.7	34.1	M22	UCX16D1
3 1/16	UCPX16-301D1													UCX16-301D1
3 1/8	UCPX16-302D1	4	15	11 5/32	4 1/32	1 1/16	1 3/16	1 9/16	7 5/8	4 11/32	3.3740	1.343	7/8	UCX16-302D1
3 3/16	UCPX16-303D1													UCX16-303D1
3 1/4	UCPX16-304D1													UC217-304D1
85	UCPX17D1	101.6	381	283	102	27	30	40	200	110	96	39.7	M22	UCX17D1
3 5/16	UCPX17-305D1	4	15	11 5/32	4 1/32	1 1/16	1 3/16	1 9/16	7 7/8	4 11/32	3.7795	1.563	7/8	UCX17-305D1
3 7/16	UCPX17-307D1													UCX17-307D1
90	UCPX18D1	101.6	381	283	111	27	30	40	206	110	104	42.9	M22	UCX18D1
3 7/16	UCPX18-307D1	4	15	11 5/32	4 3/8	1 1/16	1 3/16	1 9/16	8 1/8	4 11/32	4.0945	1.689	7/8	UCX18-307D1
3 1/2	UCPX18-308D1													UCX18-308D1
100	UCPX20D1	127	432	337	121	33	36	45	244	125	117.5	49.2	M27	UCX20D1
3 13/16	UCPX20-313D1													UCX20-313D1
3 7/8	UCPX20-314D1	5	17	13 9/32	4 3/4	1 5/16	1 13/32	1 25/32	9 19/32	4 29/32	4.6260	1.937	1	UCX20-314D1
3 15/16	UCPX20-315D1													UCX20-315D1
4	UCPX20-400D1													UCX20-400D1

Remarks: 1) These numbers indicate relubricatable type. If maintenance free type is needed, please order without suffix "D1".
Note: Please refer to page 36 for size of grease fitting.

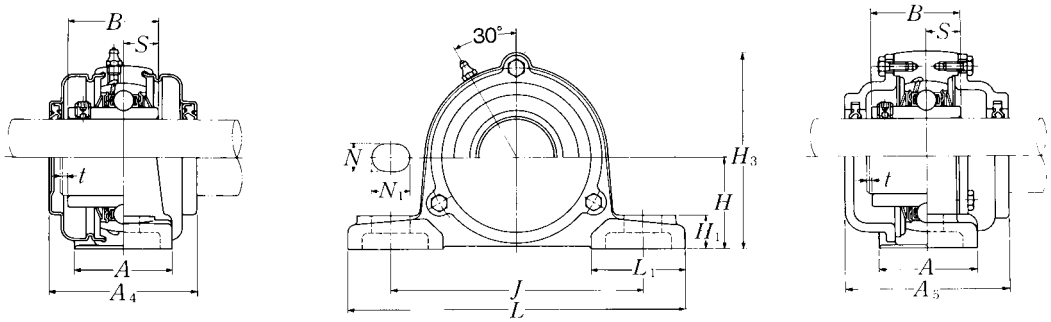

Cast dust cover type
Open end: **C-UCPX···D1**
Closed end: **CM-UCPX···D1**

Housing [1] number	Unit number [1] pressed steel dust cover type	Unit number [1] cast dust cover type	Nominal dimensions				Mass of unit		
			mm		inch		kg		lb
			t max.	A_4	H_3	A_5	UCPX	S(SM)	C(CM)
PX12D1	S(SM)-UCPX12D1	C(CM)-UCPX12D1	4	107	155	120	6.8	7.3	8.6
PX12D1	S(SM)-UCPX12-206D1	C(CM)-UCPX12-206D1	5/32	4 7/32	6 3/32	4 23/32	15	16	19
PX12D1	S(SM)-UCPX12-207D1	C(CM)-UCPX12-207D1							
PX13D1	—	C(CM)-UCPX13D1	4	—	159	135	7.2	—	9.4
PX13D1		C(CM)-UCPX13-208D1	5/32	—	6 1/4	5 5/16	16	—	21
PX13D1		C(CM)-UCPX13-209D1							
PX14D1	—	C(CM)-UCPX14D1	4	—	175	135	9.3	—	12
PX14D1		C(CM)-UCPX14-210D1							
PX14D1		C(CM)-UCPX14-211D1	5/32	—	6 7/8	5 5/16	21	—	26
PX14D1		C(CM)-UCPX14-212D1							
PX15D1	—	C(CM)-UCPX15D1	4	—	181	145	10	—	13
PX15D1		C(CM)-UCPX15-213D1							
PX15D1		C(CM)-UCPX15-214D1	5/32	—	7 1/8	5 23/32	22	—	29
PX15D1		C(CM)-UCPX15-215D1							
PX15D1		C(CM)-UCPX15-300D1							
PX16D1	—	C(CM)-UCPX16D1	4	—	198	155	14	—	17
PX16D1		C(CM)-UCPX16-301D1							
PX16D1		C(CM)-UCPX16-302D1	5/32	—	7 25/32	6 3/32	31	—	37
PX16D1		C(CM)-UCPX16-303D1							
PX16D1		C(CM)-UCPX16-304D1							
PX17D1	—	C(CM)-UCPX17D1	5	—	204	165	15	—	19
PX17D1		C(CM)-UCPX17-305D1	13/64	—	8 1/32	6 1/2	33	—	42
PX17D1		C(CM)-UCPX17-307D1							
PX18D1	—	C(CM)-UCPX18D1	5	—	208	180	16	—	21
PX18D1		C(CM)-UCPX18-307D1	13/64	—	8 3/16	7 3/32	35	—	46
PX18D1		C(CM)-UCPX18-308D1							
PX20D1	—	C(CM)-UCPX20D1	5	—	244	195	25	—	29
PX20D1		C(CM)-UCPX20-313D1							
PX20D1		C(CM)-UCPX20-314D1	13/64	—	9 39/64	7 11/16	55	—	64
PX20D1		C(CM)-UCPX20-315D1							
PX20D1		C(CM)-UCPX20-400D1							

Pillow blocks cast housing low center height
Set screw type

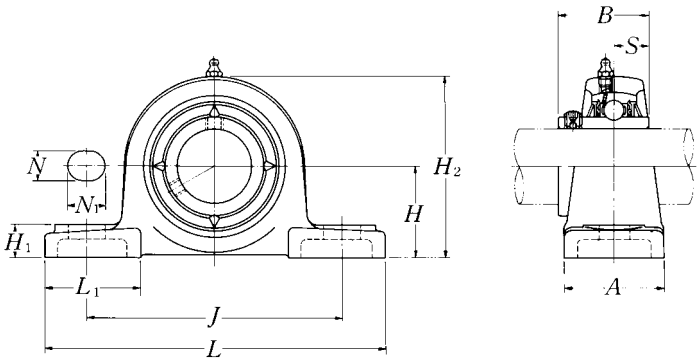

Shaft dia. mm / inch	Unit number 1) 2) 3)	Nominal dimensions mm / inch H	L	J	A	N	N1	H1	H2	L1	B	S	Bolt size mm / inch	Bearing number
20	UCPL204D1	31.75	127	95	38	13	16	14	64	42	31	12.7	M10	UC204D1
3/4	UCPL204-012D1	1 1/4	5	3 3/4	1 1/2	1/2	5/8	9/16	2 17/32	1 21/32	1.2205	0.500	3/8	UC204-012D1
25	UCPL205D1	33.34	140	105	38	13	16	15	68	42	34.1	14.3	M10	UC205D1
13/16	UCPL205-013D1													UC205-013D1
7/8	UCPL205-014D1	1 5/16	5 1/2	4 1/8	1 1/2	1/2	5/8	19/32	2 11/16	1 21/32	1.3425	0.563	3/8	UC205-014D1
15/16	UCPL205-015D1													UC205-015D1
1	UCPL205-100D1													UC205-100D1
30	UCPL206D1	39.69	165	121	48	17	20	17	80	54	38.1	15.9	M14	UC206D1
1 1/16	UCPL206-101D1													UC206-101D1
1 1/8	UCPL206-102D1	1 9/16	6 1/2	4 3/4	1 7/8	21/32	25/32	21/32	3 5/32	2 1/8	1.5000	0.626	1/2	UC206-102D1
1 3/16	UCPL206-103D1													UC206-103D1
1 1/4	UCPL206-104D1													UC206-104D1
35	UCPL207D1	46.04	167	127	48	17	20	18	91	54	42.9	17.5	M14	UC207D1
1 1/4	UCPL207-104D1													UC207-104D1
1 5/16	UCPL207-105D1	1 13/16	6 9/16	5	1 7/8	21/32	25/32	23/32	3 19/32	2 1/8	1.6890	0.689	1/2	UC207-105D1
1 3/8	UCPL207-106D1													UC207-106D1
1 7/16	UCPL207-107D1													UC207-107D1
45	UCPL209D1	52.39	190	146	54	17	20	20	104	60	49.2	19	M14	UC209D1
1 5/8	UCPL209-110D1													UC209-110D1
1 11/16	UCPL209-111D1	2 1/16	7 15/32	5 3/4	2 1/8	21/32	25/32	25/32	4 3/32	2 3/8	1.9370	0.748	1/2	UC209-111D1
1 3/4	UCPL209-112D1													UC209-112D1
50	UCPL210D1	55.56	206	159	60	20	23	21	112	65	51.6	19	M16	UC210D1
1 13/16	UCPL210-113D1													UC210-113D1
1 7/8	UCPL210-114D1	2 3/16	8 1/8	6 1/4	2 3/8	25/32	29/32	13/16	4 13/32	2 9/16	2.0315	0.748	5/8	UC210-114D1
1 15/16	UCPL210-115D1													UC210-115D1
2	UCPL210-200D1													UC210-200D1

Remarks: 1) These numbers indicate relubricatable type. If maintenance free type is needed, please order without suffix "D1".
2) UCPL204 and UCPL205 has solid bases.
3) UCPL208 has the same dimension as UCP208 shown in page 56.

Note: Please refer to page 36 for size of grease fitting.

Housing [1)] number	Mass of unit kg	lb
PL204D1	0.7	
PL204D1		1.5
PL205D1	0.8	
PL205D1		
PL205D1		1.8
PL205D1		
PL205D1		
PL206D1	1.3	
PL206D1		
PL206D1		2.9
PL206D1		
PL206D1		
PL207D1	1.6	
PL207D1		
PL207D1		3.5
PL207D1		
PL207D1		
PL209D1	2.2	
PL209D1		
PL209D1		4.9
PL209D1		
PL210D1	2.8	
PL210D1		
PL210D1		6.2
PL210D1		
PL210D1		

Pillow blocks cast housing low center height
Set screw type

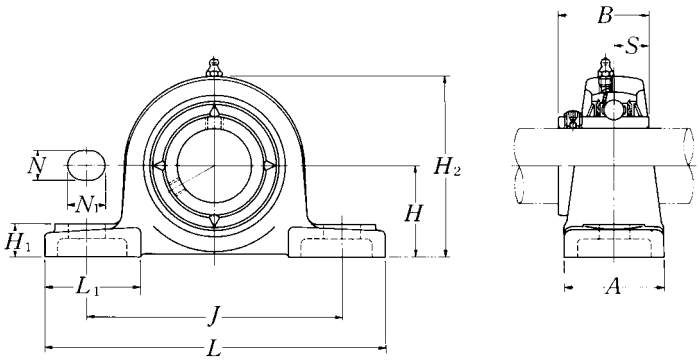

Shaft dia. mm / inch	Unit number 1) 2) 3)	Nominal dimensions mm / inch H	L	J	A	N	N1	H1	H2	L1	B	S	Bolt size mm / inch	Bearing number
55	UCPL211D1	61.91	219	171	60	20	23	23	124	65	55.6	22.2	M16	UC211D1
2	UCPL211-200D1													UC211-200D1
2 1/16	UCPL211-201D1	2 7/16	8 5/8	6 23/32	2 3/8	25/32	29/32	29/32	4 7/8	2 9/16	2.1890	0.874	5/8	UC211-201D1
2 1/8	UCPL211-202D1													UC211-202D1
2 3/16	UCPL211-203D1													UC211-203D1
60	UCPL212D1	68.26	241	184	70	20	23	25	136	70	65.1	25.4	M16	UC212D1
2 1/4	UCPL212-204D1													UC212-204D1
2 5/16	UCPL212-205D1	2 11/16	9 1/2	7 1/4	2 3/4	25/32	29/32	31/32	5 11/32	2 3/4	2.5630	1.000	5/8	UC212-205D1
2 3/8	UCPL212-206D1													UC212-206D1
2 7/16	UCPL212-207D1													UC212-207D1

Remarks: 1) These numbers indicate relubricatable type. If maintenance free type is needed, please order without suffix "D1".
2) UCPL204 and UCPL205 has solid bases.
3) UCPL208 has the same dimension as UCP208 shown in page 56.

Note: Please refer to page 36 for size of grease fitting.

Housing [1)] number	Mass of unit kg lb
PL211D1	3.4
PL211D1	
PL211D1	7.5
PL211D1	
PL211D1	
PL212D1	4.7
PL212D1	
PL212D1	10
PL212D1	
PL212D1	

Pillow blocks (Steel series)
Set screw type

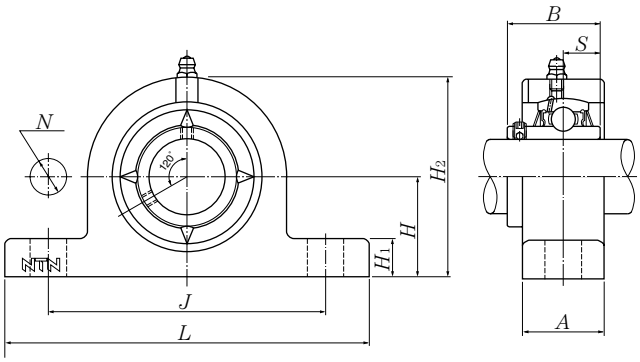

Shaft dia. mm	Unit number [1]	Nominal dimensions mm									Bolt size mm	Bearing number
		H	L	J	A	N	H_1	H_2	B	S		
12	UCPG201D1	30.2	127	95	25	12	14	62	31	12.7	M10	UC201D1
15	UCPG202D1	30.2	127	95	25	12	14	62	31	12.7	M10	UC202D1
17	UCPG203D1	30.2	127	95	25	12	14	62	31	12.7	M10	UC203D1
20	UCPG204D1	33.3	127	95	25	12	14	65	31	12.7	M10	UC204D1
25	UCPG205D1	36.5	140	105	30	12	15	71	34.1	14.3	M10	UC205D1
30	UCPG206D1	42.9	165	121	35	17	17	83	38.1	15.9	M14	UC206D1
35	UCPG207D1	47.6	167	127	35	17	18	93	42.9	17.5	M14	UC207D1
40	UCPG208D1	49.2	184	137	40	17	18	98	49.2	19	M14	UC208D1
45	UCPG209D1	54	190	146	40	17	20	106	49.2	19	M14	UC209D1
50	UCPG210D1	57.2	206	159	45	19	21	114	51.6	19	M16	UC210D1
55	UCPG211D1	63.5	219	171	45	19	23	126	55.6	22.2	M16	UC211D1
60	UCPG212D1	69.8	241	184	50	19	25	138	65.1	25.4	M16	UC212D1
65	UCPG213D1	76.2	265	203	50	24	27	151	65.1	25.4	M20	UC213D1
70	UCPG214D1	79.4	266	210	55	24	27	157	74.6	30.2	M20	UC214D1
75	UCPG215D1	82.6	275	217	55	24	28	163	77.8	33.3	M20	UC215D1
80	UCPG216D1	88.9	292	232	60	24	30	175	82.6	33.3	M20	UC216D1
85	UCPG217D1	95.2	310	247	60	24	32	187	85.7	34.1	M20	UC217D1
90	UCPG218D1	101.6	327	262	65	26	33	200	96	39.7	M22	UC218D1

Remark: 1) These numbers indicate relubricatable type. If maintenance free type is needed, please order without suffix "D1".
Note: Please refer to page 36 for size of grease fitting.

Housing [1)] number	Mass of unit kg
PG203D1	0.7
PG203D1	0.7
PG203D1	0.7
PG204D1	0.7
PG205D1	1.0
PG206D1	1.5
PG207D1	1.7
PG208D1	2.2
PG209D1	2.4
PG210D1	3.2
PG211D1	3.9
PG212D1	5.3
PG213D1	6.5
PG214D1	7.4
PG215D1	8.1
PG216D1	9.8
PG217D1	11
PG218D1	14

Pillow blocks (Steel series)
Set screw type

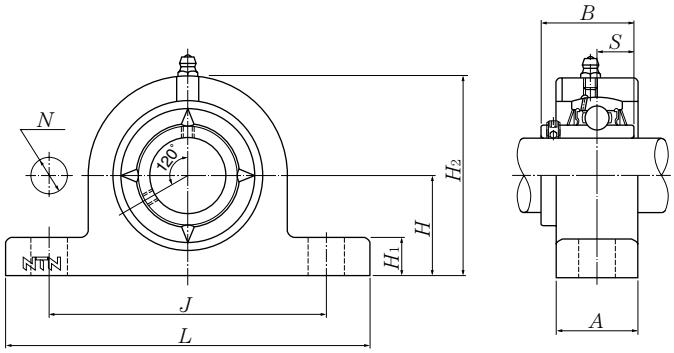

Shaft dia. mm	Unit number [1]	Nominal dimensions mm									Bolt size mm	Bearing number
		H	L	J	A	N	H1	H2	B	S		
25	UCPG305D1	45	175	132	35	17	15	85	38	15	M14	UC305D1
30	UCPG306D1	50	180	140	35	17	18	95	43	17	M14	UC306D1
35	UCPG307D1	56	210	160	40	17	20	106	48	19	M14	UC307D1
40	UCPG308D1	60	220	170	45	17	22	116	52	19	M14	UC308D1
45	UCPG309D1	67	245	190	50	19	24	129	57	22	M16	UC309D1
50	UCPG310D1	75	275	212	55	19	27	143	61	22	M16	UC310D1
55	UCPG311D1	80	310	236	60	19	30	154	66	25	M16	UC311D1
60	UCPG312D1	85	330	250	65	24	32	165	71	26	M20	UC312D1
65	UCPG313D1	90	340	260	65	24	33	176	75	30	M20	UC313D1
70	UCPG314D1	95	360	280	65	26	35	187	78	33	M22	UC314D1
75	UCPG315D1	100	380	290	75	26	35	198	82	32	M22	UC315D1
80	UCPG316D1	106	400	300	80	26	40	210	86	34	M22	UC316D1
85	UCPG317D1	112	420	320	80	32	40	220	96	40	M27	UC317D1
90	UCPG318D1	118	430	330	80	32	45	235	96	40	M27	UC318D1
95	UCPG319D1	125	470	360	90	35	45	250	103	41	M30	UC319D1
100	UCPG320D1	140	490	380	90	35	50	275	108	42	M30	UC320D1
105	UCPG321D1	140	490	380	90	35	50	280	112	44	M30	UC321D1
110	UCPG322D1	150	520	400	100	38	55	300	117	46	M33	UC322D1
120	UCPG324D1	160	570	450	100	38	65	320	126	51	M33	UC324D1
130	UCPG326D1	180	600	480	110	38	75	355	135	54	M33	UC326D1
140	UCPG328D1	200	620	500	110	38	75	390	145	59	M33	UC328D1

Remark: 1) These numbers indicate relubricatable type. If maintenance free type is needed, please order without suffix "D1".
Note: Please refer to page 36 for size of grease fitting.

Housing [1)] number	Mass of unit kg
PG305D1	1.6
PG306D1	2.0
PG307D1	2.8
PG308D1	3.6
PG309D1	5.0
PG310D1	6.9
PG311D1	8.8
PG312D1	11
PG313D1	12
PG314D1	14
PG315D1	18
PG316D1	21
PG317D1	23
PG318D1	26
PG319D1	33
PG320D1	40
PG321D1	41
PG322D1	52
PG324D1	64
PG326D1	76
PG328D1	98

Pillow blocks (Stainless series)
Set screw type

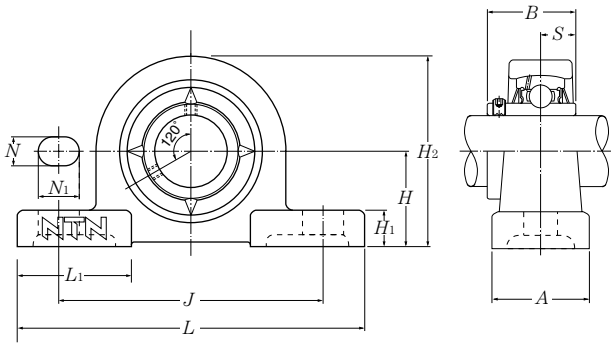

Shaft dia. mm	Unit number	Nominal dimensions mm											Bolt size mm
		H	L	J	A	N	N_1	H_1	H_2	L_1	B	S	
20	F-UCPM204/LP03	33.3	120	95	30	12	14	11	64	42	31	12.7	M10
25	F-UCPM205/LP03	36.5	130	105	30	12	14	12	70	42	34.1	14.3	M10
30	F-UCPM206/LP03	42.9	155	121	36	17	20	13	82	54	38.1	15.9	M14
35	F-UCPM207/LP03	47.6	161	127	38	17	20	14	92	54	42.9	17.5	M14
40	F-UCPM208/LP03	49.2	171	137	40	17	20	14	98	52	49.2	19	M14
45	F-UCPM209/LP03	54	180	146	40	17	20	14	105	60	49.2	19	M14
50	F-UCPM210/LP03	57.2	195	159	45	19	22	16	114	65	51.6	19	M16

Remark: 1) This series uses solid grease in the bearings as standard. A stainless steel bearing unit packed with a food grade grease or heat resistance grease is also available.
2) The basic dynamic load rating C_r of the bearing is different from a bearing made with standard bearing steel.

Bearing number mm	Basic load ratings dynamic kN C_r	Basic load ratings static kN C_{or}	Housing number mm	Mass of unit kg
F-UC204D1/LP03	9.9	6.65	PM204	0.6
F-UC205D1/LP03	10.8	7.85	PM205	0.7
F-UC206D1/LP03	15.0	11.3	PM206	1.1
F-UC207D1/LP03	19.7	15.3	PM207	1.3
F-UC208D1/LP03	22.4	17.8	PM208	1.7
F-UC209D1/LP03	25.2	20.4	PM209	1.8
F-UC210D1/LP03	27.0	23.2	PM210	2.4

Pillow blocks (Plastic housing series)
Set screw type

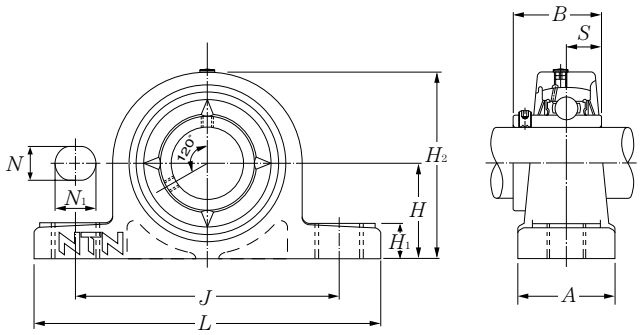

Shaft dia. mm	Unit number	Nominal dimensions mm										Bolt size mm
		H	L	J	A	N	N_1	H_1	H_2	B	S	
20	F-UCPR204/LP03	33.3	127	95	38	11※	14※	14.2	65	31	12.7	M10
25	F-UCPR205/LP03	36.5	140	105	38	11※	14※	14.5	71	34.1	14.3	M10
30	F-UCPR206/LP03	42.9	162	119※	46	14※	18※	17.8	83	38.1	15.9	M12※
35	F-UCPR207/LP03	47.6	167	127	48	14※	18※	18	94	42.9	17.5	M12※
40	F-UCPR208/LP03	49.2	184	137	54	14※	18※	19.5	98	49.2	19	M12※

Remark: 1) This series uses solid grease in the bearings as standard. Ball bearings packed with a food grade grease are also available.
2) Some dimensions are different from those for a cast iron housings (JIS product). (Main parts are shown with " ※ ")
3) The basic dynamic load rating C_r of the bearing is different from a bearing made with standard bearing steel.

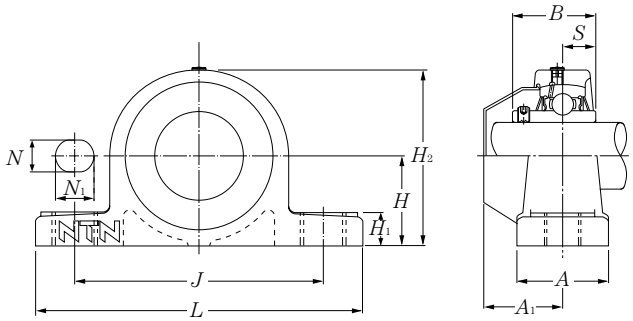

Resin dust cover type

Bearing number	Basic load ratings dynamic kN C_r	Basic load ratings static kN C_{or}	Housing number mm	Unit number resin dust cover type	Nominal dimension mm A_1	Mass of unit kg F-UCPR	Mass of unit kg F-RM-UCPR
F-UC204D1/LP03	9.9	6.65	PR204	**F-RM-UCPR204/LP03**	33	0.3	0.3
F-UC205D1/LP03	10.8	7.85	PR205	**F-RM-UCPR205/LP03**	34	0.3	0.3
F-UC206D1/LP03	15.0	11.3	PR206	**F-RM-UCPR206/LP03**	41	0.5	0.5
F-UC207D1/LP03	19.7	15.3	PR207	**F-RM-UCPR207/LP03**	43	0.7	0.7
F-UC208D1/LP03	22.4	17.8	PR208	**F-RM-UCPR208/LP03**	49	1.0	1.0

Thick pillow blocks cast housing
Set screw type

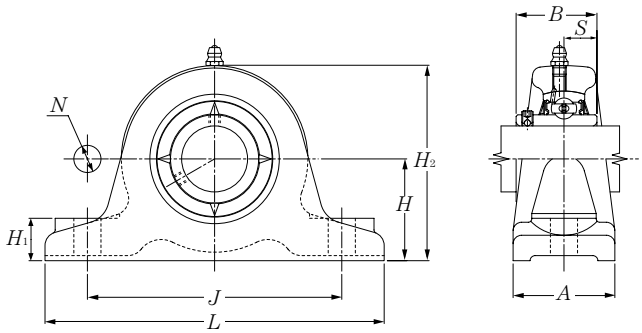

Shaft dia. mm / inch	Unit number [1]	Nominal dimensions mm / inch H	L	J	A	N	H₁	H₂	B	S	Bolt size mm / inch	Bearing number
40	UCIP208D1	60	200	150	60	19	25	115	49.2	19	M16	UC208D1
1 1/2	UCIP208-108D1	2 23/64	7 7/8	5 29/32	2 3/8	3/4	31/32	4 17/32	1.9370	0.748	5/8	UC208-108D1
1 9/16	UCIP208-109D1											UC208-109D1
45	UCIP209D1	70	210	160	60	19	25	128	49.2	19	M16	UC209D1
1 5/8	UCIP209-110D1											UC209-110D1
1 11/16	UCIP209-111D1	2 3/4	8 9/32	6 19/64	2 3/8	3/4	31/32	5 1/32	1.9370	0.748	5/8	UC209-111D1
1 3/4	UCIP209-112D1											UC209-112D1
50	UCIP210D1	70	220	170	60	19	28	132	51.6	19	M16	UC210D1
1 13/16	UCIP210-113D1											UC210-113D1
1 7/8	UCIP210-114D1	2 3/4	8 21/32	6 11/16	2 3/8	3/4	1 3/32	5 3/16	2.0315	0.748	5/8	UC210-114D1
1 15/16	UCIP210-115D1											UC210-115D1
2	UCIP210-200D1											UC210-200D1
55	UCIP211D1	80	230	180	60	19	28	148	55.6	22.2	M16	UC211D1
2	UCIP211-200D1											UC211-200D1
2 1/16	UCIP211-201D1	3 5/32	9 1/16	7 3/32	2 3/8	3/4	1 3/32	5 13/16	2.1890	0.874	5/8	UC211-201D1
2 1/8	UCIP211-202D1											UC211-202D1
2 3/16	UCIP211-203D1											UC211-203D1
60	UCIP212D1	80	260	200	70	22	30	155	65.1	25.4	M20	UC212D1
2 1/4	UCIP212-204D1											UC212-204D1
2 5/16	UCIP212-205D1	3 5/32	10 1/4	7 7/8	2 3/4	55/64	1 3/16	6 3/32	2.5630	1.000	3/4	UC212-205D1
2 3/8	UCIP212-206D1											UC212-206D1
2 7/16	UCIP212-207D1											UC212-207D1
65	UCIP213D1	90	280	220	70	22	30	172	65.1	25.4	M20	UC213D1
2 1/2	UCIP213-208D1	3 35/64	11 1/32	8 21/32	2 3/4	55/64	1 3/16	6 25/32	2.5630	1.000	3/4	UC213-208D1
2 9/16	UCIP213-209D1											UC213-209D1

Remarks: 1) These number indicate relubricatable type. If maintenance free type is needed, please order without suffix "D1".
Note: Please refer to page 36 for size of grease fitting.

Housing [1)] number	Mass of unit kg	lb
IP208D1	4.8	
IP208D1		11
IP209D1	5.5	
IP209D1		12
IP210D1	6.1	
IP210D1		13
IP211D1	7.3	
IP211D1		16
IP212D1	9.7	
IP212D1		21
IP213D1	12	
IP213D1		26

Thick pillow blocks cast housing
Set screw type

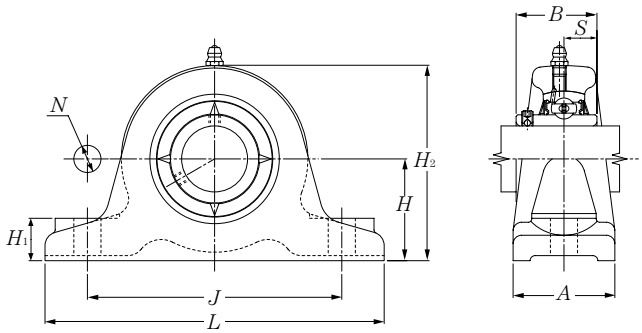

Shaft dia. mm / inch	Unit number [1]	Nominal dimensions mm / inch H	L	J	A	N	H₁	H₂	B	S	Bolt size mm / inch	Bearing number
65	UCIP313D1	110	310	250	70	22	30	208	75	30	M20	UC313D1
2 1/2	UCIP313-208D1	4 21/64	12 7/32	9 27/32	2 3/4	55/64	3/16	8 3/16	2.9528	1.181	3/4	UC313-208D1
2 9/16	UCIP313-209D1											UC313-209D1
70	UCIP314D1	110	330	270	75	25	35	215	78	33	M22	UC314D1
2 5/8	UCIP314-210D1											UC314-210D1
2 11/16	UCIP314-211D1	4 21/64	13	10 5/8	2 15/16	63/64	1 3/8	8 15/32	3.0709	1.299	7/8	UC314-211D1
2 3/4	UCIP314-212D1											UC314-212D1
75	UCIP315D1	120	340	280	75	25	35	230	82	32	M22	UC315D1
2 13/16	UCIP315-213D1											UC315-213D1
2 7/8	UCIP315-214D1	4 23/32	13 3/8	11 1/32	2 15/16	63/64	1 3/8	9 1/16	3.2283	1.260	7/8	UC315-214D1
2 15/16	UCIP315-215D1											UC315-215D1
3	UCIP315-300D1											UC315-300D1
80	UCIP316D1	120	350	290	85	25	40	235	86	34	M22	UC316D1
3 1/16	UCIP316-301D1											UC316-301D1
3 1/8	UCIP316-302D1	4 23/32	13 25/32	11 27/64	3 11/32	63/64	1 9/16	9 1/4	3.3858	1.339	7/8	UC316-302D1
3 3/16	UCIP316-303D1											UC316-303D1
85	UCIP317D1	130	370	310	85	25	40	255	96	40	M22	UC317D1
3 1/4	UCIP317-304D1											UC317-304D1
3 5/16	UCIP317-305D1	5 1/8	14 9/16	12 13/64	3 11/32	63/64	1 9/16	10 1/32	3.7795	1.575	7/8	UC317-305D1
3 7/16	UCIP317-307D1											UC317-307D1
90	UCIP318D1	130	400	330	85	30	45	260	96	40	M27	UC318D1
3 7/16	UCIP318-307D1	5 1/8	15 3/4	12 63/64	3 11/32	1 3/16	1 25/32	10 1/4	3.7795	1.575	1	UC318-307D1
3 1/2	UCIP318-308D1											UC318-308D1
95	UCIP319D1	150	410	340	85	30	45	285	103	41	M27	UC319D1
3 5/8	UCIP319-310D1											UC319-310D1
3 11/16	UCIP319-311D1	5 29/32	16 5/32	13 25/64	3 11/32	1 3/16	1 25/32	11 7/32	4.0551	1.614	1	UC319-311D1
3 3/4	UCIP319-312D1											UC319-312D1

Remarks: 1) These number indicate relubricatable type. If maintenance free type is needed, please order without suffix "D1".
Note: Please refer to page 36 for size of grease fitting.

Housing [1)] number	Mass of unit kg	lb
IP313D1	17	
IP313D1		37
IP314D1	20	
IP314D1		44
IP315D1	23	
IP315D1		51
IP316D1	27	
IP316D1		60
IP317D1	32	
IP317D1		71
IP318D1	34	
IP318D1		75
IP319D1	39	
IP319D1		86

Thick pillow blocks cast housing
Set screw type

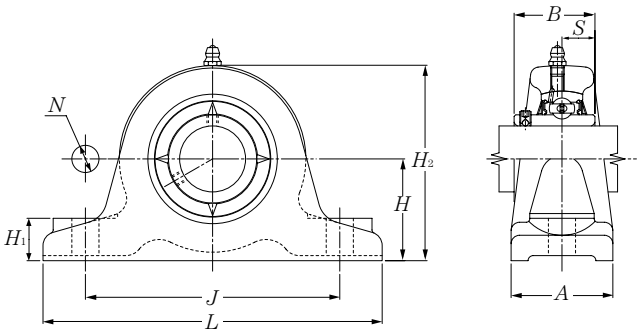

Shaft dia. mm / inch	Unit number [1]	Nominal dimensions mm / inch H	L	J	A	N	H₁	H₂	B	S	Bolt size mm / inch	Bearing number
100	UCIP320D1	150	430	360	85	30	45	295	108	42	M27	UC320D1
3 13/16	UCIP320-313D1											UC320-313D1
3 7/8	UCIP320-314D1	5 29/32	16 15/16	14 3/16	3 11/32	1 3/16	1 25/32	11 5/8	4.2520	1.654	1	UC320-314D1
3 15/16	UCIP320-315D1											UC320-315D1
4	UCIP320-400D1											UC320-400D1
110	UCIP322D1	170	490	410	100	33	50	335	117	46	M30	UC322D1
120	UCIP324D1	170	510	430	100	33	50	345	126	51	M30	UC324D1
130	UCIP326D1	200	550	470	110	33	50	390	135	54	M30	UC326D1
140	UCIP328D1	200	590	500	110	36	55	400	145	59	M33	UC328D1

Remarks: 1) These number indicate relubricatable type. If maintenance free type is needed, please order without suffix "D1".
Note: Please refer to page 36 for size of grease fitting.

Housing [1)] number	Mass of unit kg	lb
IP320D1	43	
IP320D1	95	
IP322D1	64	
IP324D1	70	
IP326D1	96	
IP328D1	104	

Thick pillow blocks (Steel series)
Set screw type

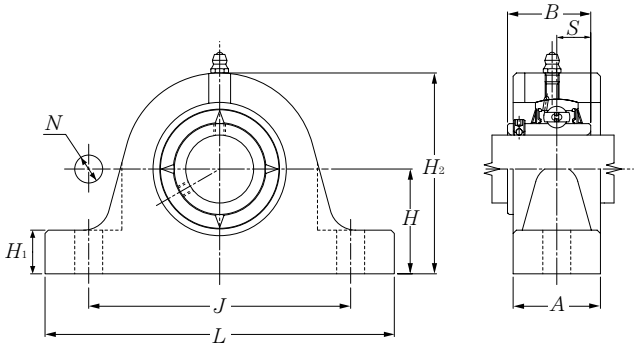

UCIPG2

Shaft dia. mm	Unit number 1)	Nominal dimensions mm									Bolt size mm	Bearing number
		H	L	J	A	N	H1	H2	B	S		
40	UCIPG208D1	60	200	150	60	19	25	115	49.2	19	M16	UC208D1
45	UCIPG209D1	70	210	160	60	19	25	128	49.2	19	M16	UC209D1
50	UCIPG210D1	70	220	170	60	19	28	132	51.6	19	M16	UC210D1
55	UCIPG211D1	80	230	180	60	19	28	148	55.6	22.2	M16	UC211D1
60	UCIPG212D1	80	260	200	70	22	30	155	65.1	25.4	M20	UC212D1
65	UCIPG213D1	90	280	220	70	22	30	172	65.1	25.4	M20	UC213D1

UCIPG3

Shaft dia. mm	Unit number 1)	Nominal dimensions mm									Bolt size mm	Bearing number
		H	L	J	A	N	H1	H2	B	S		
65	UCIPG313D1	110	310	250	70	22	30	208	75	30	M20	UC313D1
70	UCIPG314D1	110	330	270	75	25	35	215	78	33	M22	UC314D1
75	UCIPG315D1	120	340	280	75	25	35	230	82	32	M22	UC315D1
80	UCIPG316D1	120	350	290	85	25	40	235	86	34	M22	UC316D1
85	UCIPG317D1	130	370	310	85	25	40	255	96	40	M22	UC317D1
90	UCIPG318D1	130	400	330	85	30	45	260	96	40	M27	UC318D1
95	UCIPG319D1	150	410	340	85	30	45	285	103	41	M27	UC319D1
100	UCIPG320D1	150	430	360	85	30	45	295	108	42	M27	UC320D1
110	UCIPG322D1	170	490	410	100	33	50	335	117	46	M30	UC322D1
120	UCIPG324D1	170	510	430	100	33	50	345	126	51	M30	UC324D1
130	UCIPG326D1	200	550	470	110	33	50	390	135	54	M30	UC326D1
140	UCIPG328D1	200	590	500	110	36	55	400	145	59	M33	UC328D1

Remarks: 1) These number indicate relubricatable type. If maintenance free type is needed, please order without suffix "D1".
Note: Please refer to page 36 for size of grease fitting.

Housing [1] number	Mass of unit kg
IPG208D1	4.8
IPG209D1	5.5
IPG210D1	6.1
IPG211D1	7.3
IPG212D1	9.7
IPG213D1	12

Housing [1] number	Mass of unit kg
IPG313D1	17
IPG314D1	20
IPG315D1	23
IPG316D1	27
IPG317D1	32
IPG318D1	34
IPG319D1	39
IPG320D1	43
IPG322D1	64
IPG324D1	70
IPG326D1	96
IPG328D1	104

Pillow blocks cast housing high center height
Set screw type

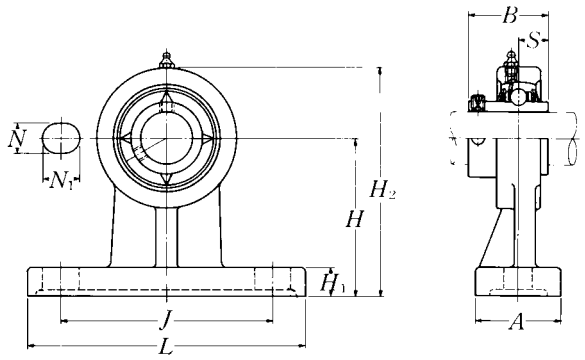

Shaft dia. mm / inch	Unit number [1]	Nominal dimensions H	L	J	A	N (mm / inch)	N1	H1	H2	B	S	Bolt size mm / inch	Bearing number
12	UCHP201D1	70	127	95	40	13	19	13	101	31	12.7	M10	UC201D1
1/2	UCHP201-008D1	2 3/4	5	3 3/4	1 9/16	1/2	3/4	1/2	3 31/32	1.2205	0.500	3/8	UC201-008D1
15	UCHP202D1	70	127	95	40	13	19	13	101	31	12.7	M10	UC202D1
9/16	UCHP202-009D1	2 3/4	5	3 3/4	1 9/16	1/2	3/4	1/2	3 31/32	1.2205	0.500	3/8	UC202-009D1
5/8	UCHP202-010D1												UC202-010D1
17	UCHP203D1	70	127	95	40	13	19	13	101	31	12.7	M10	UC203D1
11/16	UCHP203-011D1	2 3/4	5	3 3/4	1 9/16	1/2	3/4	1/2	3 31/32	1.2205	0.500	3/8	UC203-011D1
20	UCHP204D1	70	127	95	40	13	19	13	101	31	12.7	M10	UC204D1
3/4	UCHP204-012D1	2 3/4	5	3 3/4	1 9/16	1/2	3/4	1/2	3 31/32	1.2205	0.500	3/8	UC204-012D1
25	UCHP205D1	80	142	105	50	13	19	13	114	34.1	14.3	M10	UC205D1
13/16	UCHP205-013D1												UC205-013D1
7/8	UCHP205-014D1	3 5/32	5 19/32	4 1/8	1 31/32	1/2	3/4	1/2	4 1/2	1.3425	0.563	3/8	UC205-014D1
15/16	UCHP205-015D1												UC205-015D1
1	UCHP205-100D1												UC205-100D1
30	UCHP206D1	90	165	120	50	17	21	16	130	38.1	15.9	M14	UC206D1
1 1/16	UCHP206-101D1												UC206-101D1
1 1/8	UCHP206-102D1	3 35/64	6 1/2	4 23/32	1 31/32	21/32	13/16	5/8	5 1/8	1.5000	0.626	1/2	UC206-102D1
1 3/16	UCHP206-103D1												UC206-103D1
1 1/4	UCHP206-104D1												UC206-104D1
35	UCHP207D1	95	166	127	60	17	21	18	140	42.9	17.5	M14	UC207D1
1 1/4	UCHP207-104D1												UC207-104D1
1 5/16	UCHP207-105D1	3 47/64	6 17/32	5	2 3/8	21/32	13/16	23/32	5 1/2	1.6890	0.689	1/2	UC207-105D1
1 3/8	UCHP207-106D1												UC207-106D1
1 7/16	UCHP207-107D1												UC207-107D1
40	UCHP208D1	100	184	136	70	17	21	20	150	49.2	19	M14	UC208D1
1 1/2	UCHP208-108D1	3 15/16	7 1/4	5 11/32	2 3/4	21/32	13/16	25/32	5 29/32	1.9370	0.748	1/2	UC208-108D1
1 9/16	UCHP208-109D1												UC208-109D1

Remarks: 1) These numbers indicate relubricatable type. If maintenance free type is needed, please order without suffix "D1".
Note: Please refer to page 36 for size of grease fitting.

Housing [1)] number	Mass of unit kg	lb
HP204D1	0.9	
HP204D1	2.0	
HP204D1	0.9	
HP204D1	2.0	
HP204D1		
HP204D1	0.9	
HP204D1	2.0	
HP204D1	0.9	
HP204D1	2.0	
HP205D1	1.2	
HP205D1		
HP205D1	2.7	
HP205D1		
HP205D1		
HP206D1	1.8	
HP206D1		
HP206D1	4.0	
HP206D1		
HP206D1		
HP207D1	2.3	
HP207D1		
HP207D1	5.1	
HP207D1		
HP207D1		
HP208D1	3.2	
HP208D1	7.1	
HP208D1		

Pillow blocks cast housing high center height
Set screw type

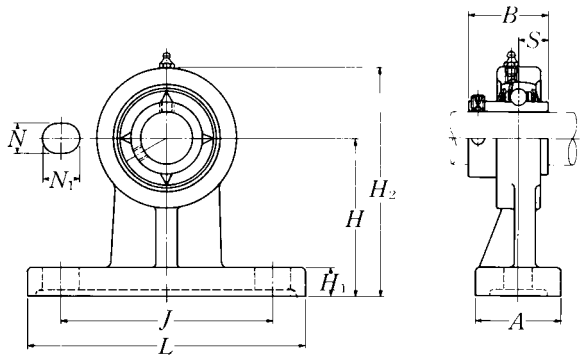

Shaft dia. mm / inch	Unit number [1]	Nominal dimensions H	L	J	A	N (mm)	N1 (mm)	H1 (inch)	H2 (inch)	B (inch)	S (inch)	Bolt size mm / inch	Bearing number
45	**UCHP209D1**	105	190	146	70	17	22	20	158	49.2	19	M14	UC209D1
1 5/8	**UCHP209-110D1**												UC209-110D1
1 11/16	**UCHP209-111D1**	4 9/64	7 15/32	5 3/4	2 3/4	21/32	7/8	25/32	6 7/32	1.9370	0.748	1/2	UC209-111D1
1 3/4	**UCHP209-112D1**												UC209-112D1
50	**UCHP210D1**	110	206	159	70	20	22	22	165	51.6	19	M16	UC210D1
1 13/16	**UCHP210-113D1**												UC210-113D1
1 7/8	**UCHP210-114D1**	4 21/64	8 1/8	6 1/4	2 3/4	25/32	7/8	7/8	6 1/2	2.0315	0.748	5/8	UC210-114D1
1 15/16	**UCHP210-115D1**												UC210-115D1
2	**UCHP210-200D1**												UC210-200D1

Remarks: 1) These numbers indicate relubricatable type. If maintenance free type is needed, please order without suffix "D1".
Note: Please refer to page 36 for size of grease fitting.

Housing [1)] number	Mass of unit kg lb
HP209D1	3.5
HP209D1	
HP209D1	7.7
HP209D1	
HP210D1	3.9
HP210D1	
HP210D1	8.6
HP210D1	
HP210D1	

Narrow pillow blocks cast housing
Set screw type

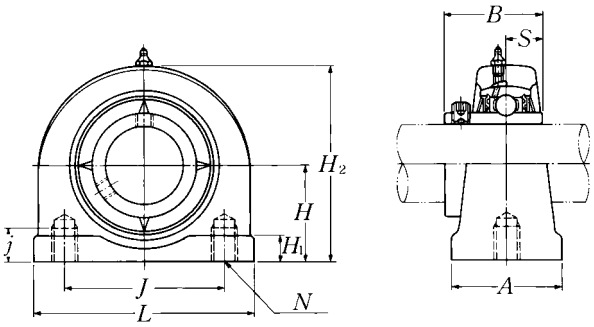

Shaft dia. mm / inch	Unit number [1]	Nominal dimensions H	L	J	A	j (mm)	H1 (inch)	H2 (inch)	B	S	N	Bearing number
12	UCUP201D1	30.2	76	52	38	13	11	62	31	12.7	M10 × 1.5	UC201D1
1/2	UCUP201-008D1	1 3/16	3	2 1/16	1 1/2	1/2	7/16	2 7/16	1.2205	0.500		UC201-008D1
15	UCUP202D1	30.2	76	52	38	13	11	62	31	12.7	M10 × 1.5	UC202D1
9/16	UCUP202-009D1	1 3/16	3	2 1/16	1 1/2	1/2	7/16	2 7/16	1.2205	0.500		UC202-009D1
5/8	UCUP202-010D1											UC202-010D1
17	UCUP203D1	30.2	76	52	38	13	11	62	31	12.7	M10 × 1.5	UC203D1
11/16	UCUP203-011D1	1 3/16	3	2 1/16	1 1/2	1/2	7/16	2 7/16	1.2205	0.500		UC203-011D1
20	UCUP204D1	30.2	76	52	38	13	11	62	31	12.7	M10 × 1.5	UC204D1
3/4	UCUP204-012D1	1 3/16	3	2 1/16	1 1/2	1/2	7/16	2 7/16	1.2205	0.500		UC204-012D1
25	UCUP205D1	36.5	84	56	38	15	12	72	34.1	14.3	M10 × 1.5	UC205D1
13/16	UCUP205-013D1											UC205-013D1
7/8	UCUP205-014D1	1 7/16	3 5/16	2 7/32	1 1/2	19/32	15/32	2 27/32	1.3425	0.563		UC205-014D1
15/16	UCUP205-015D1											UC205-015D1
1	UCUP205-100D1											UC205-100D1
30	UCUP206D1	42.9	94	66	48	18	12	84	38.1	15.9	M14 × 2	UC206D1
1 1/16	UCUP206-101D1											UC206-101D1
1 1/8	UCUP206-102D1	1 11/16	3 11/16	2 19/32	1 7/8	23/32	15/32	3 5/16	1.5000	0.629		UC206-102D1
1 3/16	UCUP206-103D1											UC206-103D1
1 1/4	UCUP206-104D1											UC206-104D1
35	UCUP207D1	47.6	110	80	48	20	13	95	42.9	17.5	M14 × 2	UC207D1
1 1/4	UCUP207-104D1											UC207-104D1
1 5/16	UCUP207-105D1	1 7/8	4 11/32	3 5/32	1 7/8	25/32	1/2	3 3/4	1.6890	0.689		UC207-105D1
1 3/8	UCUP207-106D1											UC207-106D1
1 7/16	UCUP207-107D1											UC207-107D1
40	UCUP208D1	49.2	116	84	54	20	13	100	49.2	19	M14 × 2	UC208D1
1 1/2	UCUP208-108D1	1 15/16	4 9/16	3 5/16	2 1/8	25/32	1/2	3 15/16	1.9370	0.748		UC208-108D1
1 9/16	UCUP208-109D1											UC208-109D1
45	UCUP209D1	54.2	120	90	54	25	13	108	49.2	19	M14 × 2	UC209D1
1 5/8	UCUP209-110D1											UC209-110D1
1 11/16	UCUP209-111D1	2 9/64	4 23/32	3 17/32	2 1/8	31/32	1/2	4 1/4	1.9370	0.748		UC209-111D1
1 3/4	UCUP209-112D1											UC209-112D1

Remarks: 1) These numbers indicate relubricatable type. If maintenance free type is needed, please order without suffix "D1".
Note: Please refer to page 36 for size of grease fitting.

Housing [1)] number	Mass of unit kg	lb
UP204D1	0.6	
UP204D1	1.3	
UP204D1	0.6	
UP204D1	1.3	
UP204D1		
UP204D1	0.6	
UP204D1	1.3	
UP204D1	0.6	
UP204D1	1.3	
UP205D1	0.7	
UP205D1		
UP205D1	1.5	
UP205D1		
UP205D1		
UP206D1	1.1	
UP206D1		
UP206D1	2.4	
UP206D1		
UP206D1		
UP207D1	1.6	
UP207D1		
UP207D1	3.5	
UP207D1		
UP207D1		
UP208D1	1.8	
UP208D1	4.0	
UP208D1		
UP209D1	2.1	
UP209D1		
UP209D1	4.6	
UP209D1		

Narrow pillow blocks cast housing
Set screw type

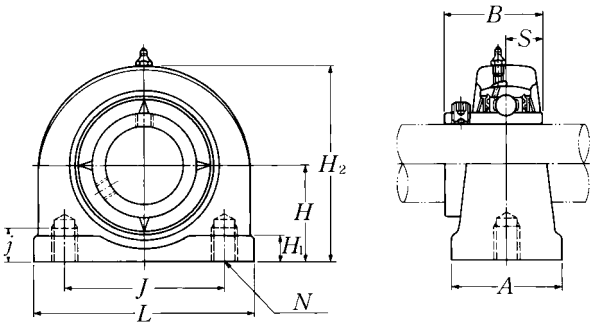

Shaft dia. mm / inch	Unit number [1]	Nominal dimensions										Bearing number
						mm		inch				
		H	*L*	*J*	*A*	*j*	*H*1	*H*2	*B*	*S*	*N*	
50	**UCUP210D1**	57.2	130	94	60	25	14	116	51.6	19	M16 × 2	UC210D1
1 13/16	**UCUP210-113D1**											UC210-113D1
1 7/8	**UCUP210-114D1**	2 1/4	5 1/8	3 11/16	2 3/8	31/32	9/16	4 9/16	2.0315	0.748		UC210-114D1
1 15/16	**UCUP210-115D1**											UC210-115D1
2	**UCUP210-200D1**											UC210-200D1

Remarks: 1) These numbers indicate relubricatable type. If maintenance free type is needed, please order without suffix "D1".
Note: Please refer to page 36 for size of grease fitting.

Housing [1)] number	Mass of unit kg lb
UP210D1	2.6
UP210D1	
UP210D1	5.7
UP210D1	
UP210D1	

Light pillow blocks cast housing
Set screw type

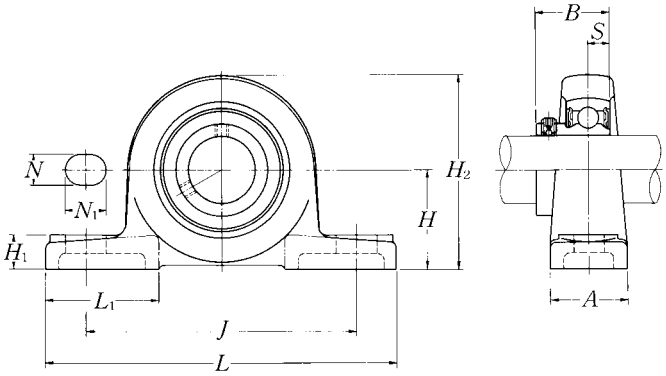

Shaft dia. mm / inch	Unit number [1]	Nominal dimensions mm / inch H	L	J	A	N	N1	H1	H2	L1	B	S	Bolt size mm / inch	Bearing number[1]
12	ASPB201	30.2	114	87	25	11	16	12	57	38	22	6	M8	AS201
1/2	ASPB201-008	1 3/16	4 1/2	3 7/16	31/32	7/16	5/8	15/32	2 1/4	1 1/2	0.8661	0.236	5/16	AS201-008
15	ASPB202	30.2	114	87	25	11	16	12	57	38	22	6	M8	AS202
9/16	ASPB202-009	1 3/16	4 1/2	3 7/16	31/32	7/16	5/8	15/32	2 1/4	1 1/2	0.8661	0.236	5/16	AS202-009
5/8	ASPB202-010													AS202-010
17	ASPB203	30.2	114	87	25	11	16	12	57	38	22	6	M8	AS203
11/16	ASPB203-011	1 3/16	4 1/2	3 7/16	31/32	7/16	5/8	15/32	2 1/4	1 1/2	0.8661	0.236	5/16	AS203-011
20	ASPB204	33.3	125	97	27	11	16	13	65	40	25	7	M8	AS204
3/4	ASPB204-012	1 5/16	4 29/32	3 13/16	1 1/16	7/16	5/8	1/2	2 9/16	1 9/16	0.9843	0.276	5/16	AS204-012
25	ASPB205	36.5	130	100	29	11	16	13	71	42	27	7.5	M8	AS205
13/16	ASPB205-013													AS205-013
7/8	ASPB205-014	1 7/16	5 1/8	3 15/16	1 5/32	7/16	5/8	1/2	2 25/32	1 21/32	1.0630	0.295	5/16	AS205-014
15/16	ASPB205-015													AS205-015
1	ASPB205-100													AS205-100
30	ASPB206	42.9	156	120	33	14	21	14	83	52	29	8	M12	AS206
1 1/16	ASPB206-101													AS206-101
1 1/8	ASPB206-102	1 11/16	6 5/32	4 23/32	1 5/16	9/16	13/16	9/16	3 9/32	2 1/16	1.1417	0.315	1/2	AS206-102
1 3/16	ASPB206-103													AS206-103
1 1/4	ASPB206-104													AS206-104
35	ASPB207	47.6	165	127	35	14	21	16	93	52	34	8.5	M12	AS207
1 1/4	ASPB207-104													AS207-104
1 5/16	ASPB207-105	1 7/8	6 1/2	5	1 3/8	9/16	13/16	5/8	3 21/32	2 1/16	1.3386	0.335	1/2	AS207-105
1 3/8	ASPB207-106													AS207-106
1 7/16	ASPB207-107													AS207-107
40	ASPB208	50.8	184	140	37	14	22	18	102	52	38	9	M12	AS208
1 1/2	ASPB208-108	2	7 1/4	5 1/2	1 15/32	9/16	7/8	23/32	4 1/32	2 1/16	1.4961	0.354	1/2	AS208-108
1 9/16	ASPB208-109													AS208-109

Remarks: 1) If relubricatable type is needed, please order with suffix "D1".

Housing[1)] number	Mass of unit kg	lb
PB201	0.4	
PB201		0.9
PB201	0.4	
PB201		0.9
PB201	0.4	
PB201		0.9
PB204	0.5	
PB204		1.1
PB205	0.6	
PB205		1.3
PB206	1.0	
PB206		2.2
PB207	1.2	
PB207		2.7
PB208	1.7	
PB208		3.8

Pillow blocks ductile cast housing (Ductile series)
Set screw type

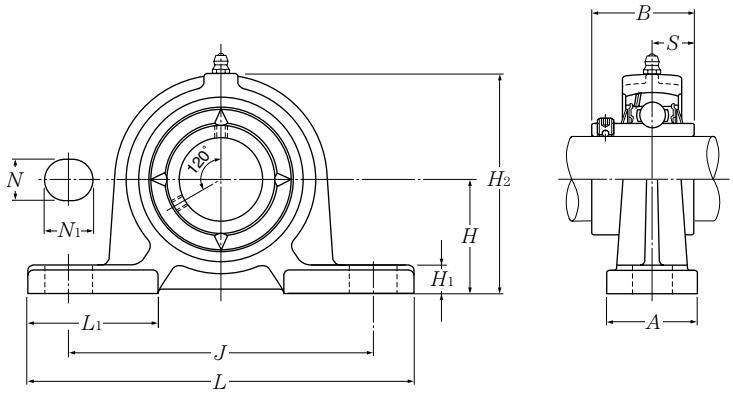

Shaft dia. mm	Unit number [1]	Nominal dimensions mm											Bolt size mm	Bearing number
		H	L	J	A	N	N_1	H_1	H_2	L_1	B	S		
12	**UCPE201D1**	30.2	120	95	30	12	14	9	61	42	31	12.7	M10	UC201D1
15	**UCPE202D1**	30.2	120	95	30	12	14	9	61	42	31	12.7	M10	UC202D1
17	**UCPE203D1**	30.2	120	95	30	12	14	9	61	42	31	12.7	M10	UC203D1
20	**UCPE204D1**	33.3	120	95	30	12	14	9	64	42	31	12.7	M10	UC204D1
25	**UCPE205D1**	36.5	130	105	30	12	14	10	70	42	34.1	14.3	M10	UC205D1
30	**UCPE206D1**	42.9	155	121	36	17	20	11	82	54	38.1	15.9	M14	UC206D1
35	**UCPE207D1**	47.6	161	127	38	17	20	12	92	54	42.9	17.5	M14	UC207D1
40	**UCPE208D1**	49.2	171	137	40	17	20	12	98	52	49.2	19	M14	UC208D1
45	**UCPE209D1**	54	180	146	40	17	20	13	105	60	49.2	19	M14	UC209D1
50	**UCPE210D1**	57.2	195	159	45	19	22	14	114	65	51.6	19	M16	UC210D1
55	**UCPE211D1**	63.5	207	171	45	19	22	15	125	65	55.6	22.2	M16	UC211D1
60	**UCPE212D1**	69.8	220	184	55	19	22	17	137	70	65.1	25.4	M16	UC212D1

Remarks: 1) These numbers indicate relubricatable type. If maintenance free type is needed, please order without suffix "D1".
Note: Please refer to page 36 for size of grease fitting.

Housing [1)] number	Mass of unit kg
PE203D1	0.5
PE203D1	0.5
PE203D1	0.5
PE204D1	0.4
PE205D1	0.5
PE206D1	0.8
PE207D1	1.1
PE208D1	1.3
PE209D1	1.5
PE210D1	1.8
PE211D1	2.4
PE212D1	3.3

Pillow blocks cast housing low center height
Set screw type

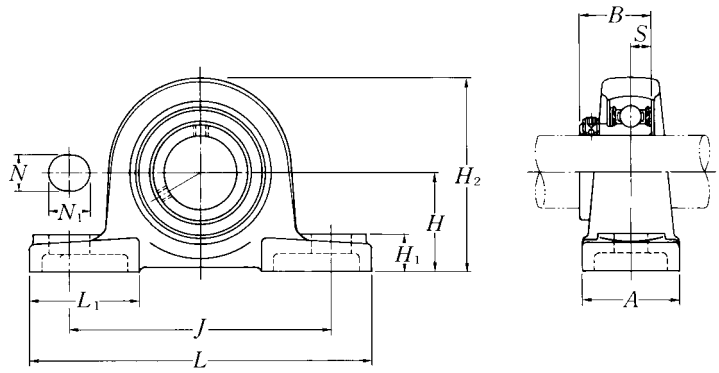

Shaft dia. mm / inch	Unit number 1) 2) 3)	Nominal dimensions mm / inch H	L	J	A	N	N1	H1	H2	L1	B	S	Bolt size mm / inch	Bearing number 2)
12	ASPL201	26.99	121	89	35	11	14	13	54	40	22	6	M10	AS201
1/2	ASPL201-008	1 1/16	4 3/4	3 1/2	1 3/8	7/16	9/16	1/2	2 1/8	1 9/16	0.8661	0.236	3/8	AS201-008
15	ASPL202	26.99	121	89	35	11	14	13	54	40	22	6	M10	AS202
9/16	ASPL202-009	1 1/16	4 3/4	3 1/2	1 3/8	7/16	9/16	1/2	2 1/8	1 9/16	0.8661	0.236	3/8	AS202-009
5/8	ASPL202-010													AS202-010
17	ASPL203	26.99	121	89	35	11	14	13	54	40	22	6	M10	AS203
11/16	ASPL203-011	1 1/16	4 3/4	3 1/2	1 3/8	7/16	9/16	1/2	2 1/8	1 9/16	0.8661	0.236	3/8	AS203-011
20	ASPL204	31.75	127	95	38	13	16	14	64	42	25	7	M10	AS204
3/4	ASPL204-012	1 1/4	5	3 3/4	1 1/2	1/2	5/8	9/16	2 17/32	1 21/32	0.9843	0.276	3/8	AS204-012
25	ASPL205	33.34	140	105	38	13	16	15	68	42	27	7.5	M10	AS205
13/16	ASPL205-013													AS205-013
7/8	ASPL205-014	1 5/16	5 1/2	4 1/8	1 1/2	1/2	5/8	19/32	2 11/16	1 21/32	1.0630	0.295	3/8	AS205-014
15/16	ASPL205-015													AS205-015
1	ASPL205-100													AS205-100
30	ASPL206	39.69	165	121	48	17	20	17	80	54	29	8	M14	AS206
1 1/16	ASPL206-101													AS206-101
1 1/8	ASPL206-102	1 9/16	6 1/2	4 3/4	1 7/8	21/32	25/32	21/32	3 5/32	2 1/8	1.1417	0.315	1/2	AS206-102
1 3/16	ASPL206-103													AS206-103
1 1/4	ASPL206-104													AS206-104
35	ASPL207	46.04	167	127	48	17	20	18	91	54	34	8.5	M14	AS207
1 1/4	ASPL207-104													AS207-104
1 5/16	ASPL207-105	1 13/16	6 9/16	5	1 7/8	21/32	25/32	23/32	3 19/32	2 1/8	1.3386	0.335	1/2	AS207-105
1 3/8	ASPL207-106													AS207-106
1 7/16	ASPL207-107													AS207-107
40	ASP208	49.2	184	137	54	17	20	18	98	52	38	9	M14	AS208
1 1/2	ASP208-108	1 15/16	7 1/4	5 13/32	2 1/8	21/32	25/32	23/32	3 27/32	2 1/16	1.4961	0.354	1/2	AS208-108
1 9/16	ASP208-109													AS208-109

Remarks: 1) ASPL201 to ASPL205 has solid bases.
2) If relubricatable type is neede, please order with suffix "D1".
3) ASPL208 has the same dimension as ASP208.

Housing [2] number	Mass of unit kg	lb
PL201	0.5	
PL201		1.1
PL201	0.5	
PL201		1.1
PL201		
PL201	0.5	
PL201		1.1
PL204	0.7	
PL204		1.5
PL205	0.8	
PL205		
PL205		1.8
PL205		
PL205		
PL206	1.2	
PL206		
PL206		2.6
PL206		
PL206		
PL207	1.5	
PL207		
PL207		3.3
PL207		
PL207		
P208	1.8	
P208		4.0
P208		

Pillow blocks cast housing low center height
Set screw type

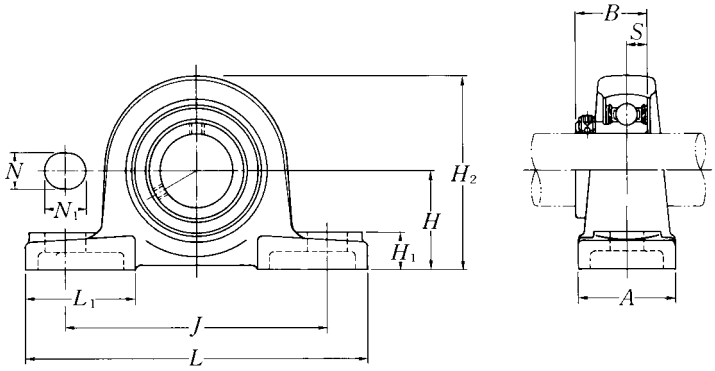

Shaft dia. mm / inch	Unit number 1) 2) 3)	Nominal dimensions mm / inch H	L	J	A	N	N1	H1	H2	L1	B	S	Bolt size mm / inch	Bearing number 2)
45	ASPL209	52.39	190	146	54	17	20	20	104	60	40	9.5	M14	AS209
1 5/8	ASPL209-110													AS209-110
1 11/16	ASPL209-111	2 1/16	7 15/32	5 3/4	2 1/8	21/32	25/32	25/32	4 3/32	2 3/8	1.5748	0.374	1/2	AS209-111
1 3/4	ASPL209-112													AS209-112
50	ASPL210	55.56	206	159	60	20	23	21	112	65	42	10	M16	AS210
1 13/16	ASPL210-113													AS210-113
1 7/8	ASPL210-114	2 3/16	8 1/8	6 1/4	2 3/8	25/32	29/32	13/16	4 13/32	2 9/16	1.6535	0.394	5/8	AS210-114
1 15/16	ASPL210-115													AS210-115
2	ASPL210-200													AS210-200

Remarks: 1) ASPL201 to ASPL205 has solid bases.
2) If relubricatable type is neede, please order with suffix "D1".
3) ASPL208 has the same dimension as ASP208.

Housing [2] number	Mass of unit kg lb
PL209	2.0
PL209	
PL209	4.4
PL209	
PL210	2.6
PL210	
PL210	5.7
PL210	
PL210	

Pillow blocks pressed steel housing
Set screw type

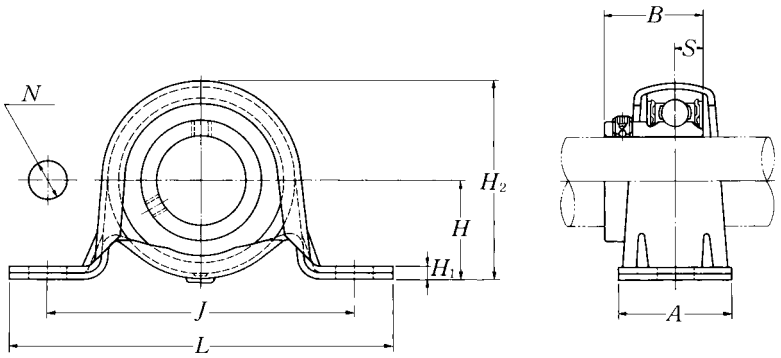

Shaft dia. mm / inch	Unit number	Nominal dimensions H	L	J	A	N	H1	H2	B	S	Bolt size mm / inch	Bearing number	Housing number	Mass of unit kg / lb
					mm		inch							
12	ASPP201	22.2	86	68	25	9.5	3.2	43.8	22	6	M 8	AS201	PP203	0.2
1/2	ASPP201-008	7/8	3 3/8	2 11/16	31/32	3/8	0.126	1 23/32	0.8661	0.236	5/16	AS201-008	PP203	0.4
15	ASPP202	22.2	86	68	25	9.5	3.2	43.8	22	6	M 8	AS202	PP203	0.2
9/16	ASPP202-009	7/8	3 3/8	2 11/16	31/32	3/8	0.126	1 23/32	0.8661	0.236	5/16	AS202-009	PP203	0.4
5/8	ASPP202-010											AS202-010	PP203	
17	ASPP203	22.2	86	68	25	9.5	3.2	43.8	22	6	M 8	AS203	PP203	0.1
11/16	ASPP203-011	7/8	3 3/8	2 11/16	31/32	3/8	0.126	1 23/32	0.8661	0.236	5/16	AS203-011	PP203	0.2
20	ASPP204	25.4	98	76	32	9.5	3.2	50.5	25	7	M 8	AS204	PP204	0.2
3/4	ASPP204-012	1	3 27/32	3	1 1/4	3/8	0.126	2	0.9843	0.276	5/16	AS204-012	PP204	0.4
25	ASPP205	28.6	108	86	32	11.5	4	56.6	27	7.5	M10	AS205	PP205	0.3
13/16	ASPP205-013											AS205-013	PP205	
7/8	ASPP205-014	1 1/8	4 1/4	3 3/8	1 1/4	29/64	0.157	2 7/32	1.0630	0.295	3/8	AS205-014	PP205	0.7
15/16	ASPP205-015											AS205-015	PP205	
1	ASPP205-100											AS205-100	PP205	
30	ASPP206	33.3	117	95	38	11.5	4	66.3	29	8	M10	AS206	PP206	0.4
1 1/16	ASPP206-101											AS206-101	PP206	
1 1/8	ASPP206-102	1 5/16	4 19/32	3 3/4	1 1/2	29/64	0.157	2 5/8	1.1417	0.315	3/8	AS206-102	PP206	0.9
1 3/16	ASPP206-103											AS206-103	PP206	
1 1/4	ASPP206-104											AS206-104	PP206	
35	ASPP207	39.7	129	106	42	11.5	4.6	78	34	8.5	M10	AS207	PP207	0.6
1 1/4	ASPP207-104											AS207-104	PP207	
1 5/16	ASPP207-105	1 9/16	5 3/32	4 3/16	1 21/32	29/64	0.181	3 1/16	1.3386	0.335	3/8	AS207-105	PP207	1.3
1 3/8	ASPP207-106											AS207-106	PP207	
1 7/16	ASPP207-107											AS207-107	PP207	

Remarks: 1) The permissible load only applies in applications where the load is stable and the speed is 2400 min^{-1} or less.
The mounting surface should be flat.

Max. load [1] recommended N lbf	
radial	axial
2 000 440	800 160
2 000 440	800 160
2 000 440	800 160
2 500 550	1 000 200
3 500 770	1 400 280
4 000 880	1 600 320
4 500 990	1 800 360

Pillow blocks pressed steel housing with rubber ring
Set screw type

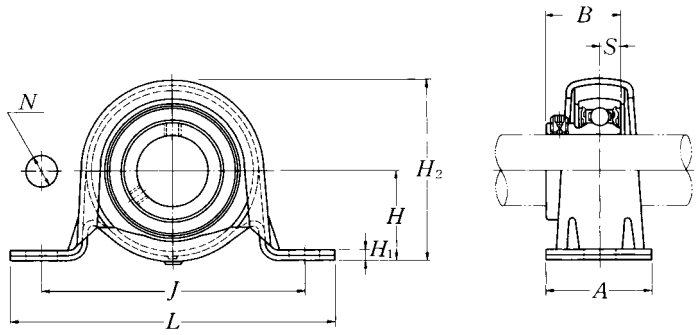

Shaft dia. mm / inch	Unit number	Nominal dimensions H	L	J	A	N (mm / inch)	H1	H2	B	S	Bolt size mm / inch	Bearing number
12	ASRPP201	25.4	98	76	32	9.5	3.2	50.5	22	6	M 8	AS201
1/2	ASRPP201-008	1	3 27/32	3	1 1/4	3/8	0.126	2	0.8661	0.236	5/16	AS201-008
15	ASRPP202	25.4	98	76	32	9.5	3.2	50.5	22	6	M 8	AS202
9/16	ASRPP202-009	1	3 27/32	3	1 1/4	3/8	0.126	2	0.8661	0.236	5/16	AS202-009
5/8	ASRPP202-010											AS202-010
17	ASRPP203	25.4	98	76	32	9.5	3.2	50.5	22	6	M 8	AS203
11/16	ASRPP203-011	1	3 27/32	3	1 1/4	3/8	0.126	2	0.8661	0.236	5/16	AS203-011
20	ASRPP204	28.6	108	86	32	11.5	4	56.6	25	7	M10	AS204
3/4	ASRPP204-012	1 1/8	4 1/4	3 3/8	1 1/4	29/64	0.157	2 7/32	0.9843	0.276	3/8	AS204-012
25	ASRPP205	33.3	117	95	38	11.5	4	66.3	27	7.5	M10	AS205
13/16	ASRPP205-013											AS205-013
7/8	ASRPP205-014	1 5/16	4 19/32	3 3/4	1 1/2	29/64	0.157	2 5/8	1.0630	0.295	3/8	AS205-014
15/16	ASRPP205-015											AS205-015
1	ASRPP205-100											AS205-100
30	ASRPP206	39.7	129	106	42	11.5	4.6	78	29	8	M10	AS206
1 1/16	ASRPP206-101											AS206-101
1 1/8	ASRPP206-102	1 9/16	5 3/32	4 3/16	1 21/32	29/64	0.181	3 1/16	1.1417	0.315	3/8	AS206-102
1 3/16	ASRPP206-103											AS206-103
1 1/4	ASRPP206-104											AS206-104

Remarks: 1) The permissible load only applies in applications where the load is stable and the speed is 2400 min^{-1} or less.
The mounting surface should be flat.
2) When an anti-vibration rubber ring is used, the self alignment capability will be reduce.

Housing number		Mass of unit	Max. load [1] recommended	
		kg lb	N lbf	
rubber ring	steel		radial	axial
R201	PP204	0.2	1 000	200
R201	PP204	0.4	220	40
R201	PP204	0.2	1 000	200
R201	PP204	0.4	220	40
R201	PP204			
R201	PP204	0.2	1 000	200
R201	PP204	0.4	220	40
R204	PP205	0.3	1 150	200
R204	PP205	0.7	250	40
R205	PP206	0.4	1 300	200
R205	PP206			
R205	PP206	0.9	280	40
R205	PP206			
R205	PP206			
R206	PP207	0.5	1 500	200
R206	PP207			
R206	PP207	1.1	330	40
R206	PP207			
R206	PP207			

Square flanged units cast housing
Set screw type

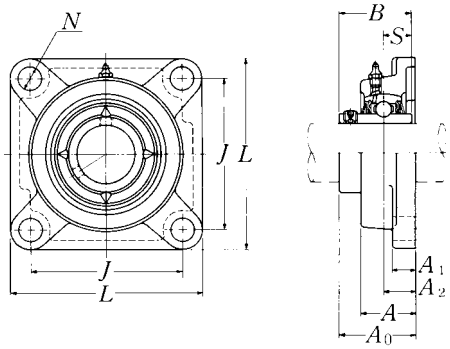

Shaft dia. mm / inch	Unit number [1]	Nominal dimensions mm / inch L	J	A2	A1	A	N	A0	B	S	Bolt size mm / inch	Bearing number
12	UCF201D1	86	64	15	11	25.5	12	33.3	31	12.7	M10	UC201D1
1/2	UCF201-008D1	3 3/8	2 33/64	19/32	7/16	1	15/32	1 5/16	1.2205	0.500	3/8	UC201-008D1
15	UCF202D1	86	64	15	11	25.5	12	33.3	31	12.7	M10	UC202D1
9/16	UCF202-009D1	3 3/8	2 33/64	19/32	7/16	1	15/32	1 5/16	1.2205	0.500	3/8	UC202-009D1
5/8	UCF202-010D1											UC202-010D1
17	UCF203D1	86	64	15	11	25.5	12	33.3	31	12.7	M10	UC203D1
11/16	UCF203-011D1	3 3/8	2 33/64	19/32	7/16	1	15/32	1 5/16	1.2205	0.500	3/8	UC203-011D1
20	UCF204D1	86	64	15	11	25.5	12	33.3	31	12.7	M10	UC204D1
3/4	UCF204-012D1	3 3/8	2 33/64	19/32	7/16	1	15/32	1 5/16	1.2205	0.500	3/8	UC204-012D1
25	UCF205D1	95	70	16	13	27	12	35.8	34.1	14.3	M10	UC205D1
13/16	UCF205-013D1											UC205-013D1
7/8	UCF205-014D1	3 3/4	2 3/4	5/8	1/2	1 1/16	15/32	1 13/32	1.3425	0.563	3/8	UC205-014D1
15/16	UCF205-015D1											UC205-015D1
1	UCF205-100D1											UC205-100D1
30	UCF206D1	108	83	18	13	31	12	40.2	38.1	15.9	M10	UC206D1
1 1/16	UCF206-101D1											UC206-101D1
1 1/8	UCF206-102D1	4 1/4	3 17/64	45/64	1/2	1 7/32	15/32	1 37/64	1.5000	0.626	3/8	UC206-102D1
1 3/16	UCF206-103D1											UC206-103D1
1 1/4	UCF206-104D1											UC206-104D1
35	UCF207D1	117	92	19	15	34	14	44.4	42.9	17.5	M12	UC207D1
1 1/4	UCF207-104D1											UC207-104D1
1 5/16	UCF207-105D1	4 19/32	3 5/8	3/4	19/32	1 11/32	35/64	1 3/4	1.6890	0.689	7/16	UC207-105D1
1 3/8	UCF207-106D1											UC207-106D1
1 7/16	UCF207-107D1											UC207-107D1
40	UCF208D1	130	102	21	15	36	16	51.2	49.2	19	M14	UC208D1
1 1/2	UCF208-108D1	5 1/8	4 1/64	53/64	19/32	1 13/32	5/8	2 1/64	1.9370	0.748	1/2	UC208-108D1
1 9/16	UCF208-109D1											UC208-109D1
45	UCF209D1	137	105	22	16	38	16	52.2	49.2	19	M14	UC209D1
1 5/8	UCF209-110D1											UC209-110D1
1 11/16	UCF209-111D1	5 13/32	4 9/64	55/64	5/8	1 1/2	5/8	2 1/16	1.9370	0.748	1/2	UC209-111D1
1 3/4	UCF209-112D1											UC209-112D1

Remarks: 1) These numbers indicate relubricatable type. If maintenance free type is needed, please order without suffix "D1".
Note: Please refer to page 36 for size of grease fitting.

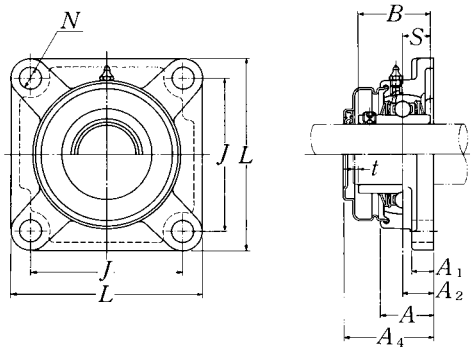

Pressed steel dust cover type
Open end: **S-UCF···D1**
Closed end: **SM-UCF···D1**

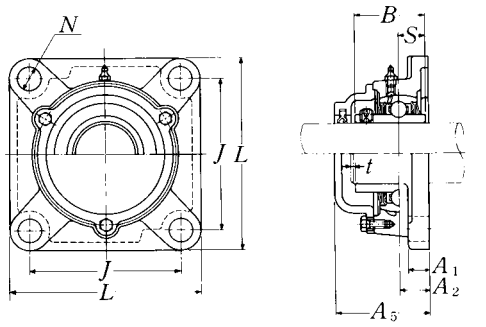

Cast dust cover type
Open end: **C-UCF···D1**
Closed end: **CM-UCF···D1**

Housing [1] number	Unit number [1] pressed steel dust cover type	Unit number [1] cast dust cover type	Nominal dimensions mm / inch: t max.	A_4	A_5	Mass of unit kg / lb: UCF	S(SM)	C(CM)
F204D1	S(SM)-UCF201D1	C(CM)-UCF201D1	2	40.5	46	0.6	0.6	0.8
F204D1	S(SM)-UCF201-008D1	C(CM)-UCF201-008D1	5/64	1 19/32	1 13/16	1.3	1.3	1.8
F204D1	S(SM)-UCF202D1	C(CM)-UCF202D1	2	40.5	46	0.6	0.6	0.8
F204D1	S(SM)-UCF202-009D1	C(CM)-UCF202-009D1	5/64	1 19/32	1 13/16	1.3	1.3	1.8
F204D1	S(SM)-UCF202-010D1	C(CM)-UCF202-010D1						
F204D1	S(SM)-UCF203D1	C(CM)-UCF203D1	2	40.5	46	0.6	0.6	0.8
F204D1	S(SM)-UCF203-011D1	C(CM)-UCF203-011D1	5/64	1 19/32	1 13/16	1.3	1.3	1.8
F204D1	S(SM)-UCF204D1	C(CM)-UCF204D1	2	40.5	46	0.6	0.6	0.7
F204D1	S(SM)-UCF204-012D1	C(CM)-UCF204-012D1	5/64	1 19/32	1 13/16	1.3	1.3	1.8
F205D1	S(SM)-UCF205D1	C(CM)-UCF205D1	2	44.5	51	0.8	0.8	0.9
F205D1	S(SM)-UCF205-013D1	C(CM)-UCF205-013D1						
F205D1	S(SM)-UCF205-014D1	C(CM)-UCF205-014D1	5/64	1 3/4	2	1.8	1.8	2.0
F205D1	S(SM)-UCF205-015D1	C(CM)-UCF205-015D1						
F205D1	S(SM)-UCF205-100D1	C(CM)-UCF205-100D1						
F206D1	S(SM)-UCF206D1	C(CM)-UCF206D1	2	49	56	1.1	1.1	1.3
F206D1	S(SM)-UCF206-101D1	C(CM)-UCF206-101D1						
F206D1	S(SM)-UCF206-102D1	C(CM)-UCF206-102D1	5/64	1 15/16	2 7/32	2.4	2.4	2.9
F206D1	S(SM)-UCF206-103D1	C(CM)-UCF206-103D1						
F206D1	S(SM)-UCF206-104D1	C(CM)-UCF206-104D1						
F207D1	S(SM)-UCF207D1	C(CM)-UCF207D1	3	55	59	1.5	1.5	1.8
F207D1	S(SM)-UCF207-104D1	C(CM)-UCF207-104D1						
F207D1	S(SM)-UCF207-105D1	C(CM)-UCF207-105D1	1/8	2 5/32	2 5/16	3.3	3.3	4.0
F207D1	S(SM)-UCF207-106D1	C(CM)-UCF207-106D1						
F207D1	S(SM)-UCF207-107D1	C(CM)-UCF207-107D1						
F208D1	S(SM)-UCF208D1	C(CM)-UCF208D1	3	62	66	1.7	1.8	2.2
F208D1	S(SM)-UCF208-108D1	C(CM)-UCF208-108D1	1/8	2 7/16	2 19/32	3.8	4.0	4.9
F208D1	S(SM)-UCF208-109D1	C(CM)-UCF208-109D1						
F209D1	S(SM)-UCF209D1	C(CM)-UCF209D1	3	63	70	2.1	2.2	2.6
F209D1	S(SM)-UCF209-110D1	C(CM)-UCF209-110D1						
F209D1	S(SM)-UCF209-111D1	C(CM)-UCF209-111D1	1/8	2 15/32	2 3/4	4.6	4.9	5.7
F209D1	S(SM)-UCF209-112D1	C(CM)-UCF209-112D1						

Square flanged units cast housing
Set screw type

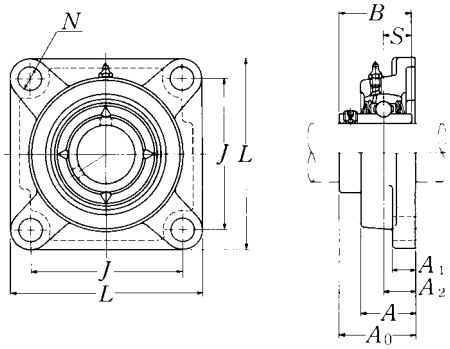

Shaft dia. mm / inch	Unit number [1]	Nominal dimensions mm / inch L	J	A2	A1	A	N	A0	B	S	Bolt size mm / inch	Bearing number
50	UCF210D1	143	111	22	16	40	16	54.6	51.6	19	M14	UC210D1
1 13/16	UCF210-113D1											UC210-113D1
1 7/8	UCF210-114D1	5 5/8	4 3/8	55/64	5/8	1 9/16	5/8	2 5/32	2.0315	0.748	1/2	UC210-114D1
1 15/16	UCF210-115D1											UC210-115D1
2	UCF210-200D1											UC210-200D1
55	UCF211D1	162	130	25	18	43	19	58.4	55.6	22.2	M16	UC211D1
2	UCF211-200D1											UC211-200D1
2 1/16	UCF211-201D1	6 3/8	5 1/8	63/64	23/32	1 11/16	3/4	2 19/64	2.1890	0.874	5/8	UC211-201D1
2 1/8	UCF211-202D1											UC211-202D1
2 3/16	UCF211-203D1											UC211-203D1
60	UCF212D1	175	143	29	18	48	19	68.7	65.1	25.4	M16	UC212D1
2 1/4	UCF212-204D1											UC212-204D1
2 5/16	UCF212-205D1	6 7/8	5 5/8	1 9/64	23/32	1 7/8	3/4	2 45/64	2.5630	1.000	5/8	UC212-205D1
2 3/8	UCF212-206D1											UC212-206D1
2 7/16	UCF212-207D1											UC212-207D1
65	UCF213D1	187	149	30	22	50	19	69.7	65.1	25.4	M16	UC213D1
2 1/2	UCF213-208D1	7 3/8	5 55/64	1 3/16	7/8	1 31/32	3/4	2 3/4	2.5630	1.000	5/8	UC213-208D1
2 9/16	UCF213-209D1											UC213-209D1
70	UCF214D1	193	152	31	22	54	19	75.4	74.6	30.2	M16	UC214D1
2 5/8	UCF214-210D1											UC214-210D1
2 11/16	UCF214-211D1	7 19/32	5 63/64	1 7/32	7/8	2 1/8	3/4	2 31/32	2.9370	1.189	5/8	UC214-211D1
2 3/4	UCF214-212D1											UC214-212D1
75	UCF215D1	200	159	34	22	56	19	78.5	77.8	33.3	M16	UC215D1
2 13/16	UCF215-213D1											UC215-213D1
2 7/8	UCF215-214D1	7 7/8	6 17/64	1 11/32	7/8	2 7/32	3/4	3 3/32	3.0630	1.311	5/8	UC215-214D1
2 15/16	UCF215-215D1											UC215-215D1
3	UCF215-300D1											UC215-300D1
80	UCF216D1	208	165	34	22	58	23	83.3	82.6	33.3	M20	UC216D1
3 1/16	UCF216-301D1											UC216-301D1
3 1/8	UCF216-302D1	8 3/16	6 1/2	1 11/32	7/8	2 9/32	29/32	3 9/32	3.2520	1.311	3/4	UC216-302D1
3 3/16	UCF216-303D1											UC216-303D1

Remarks: 1) These numbers indicate relubricatable type. If maintenance free type is needed, please order without suffix "D1".
Note: Please refer to page 36 for size of grease fitting.

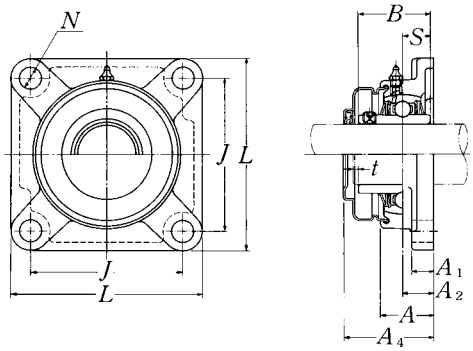

Pressed steel dust cover type
Open end: **S-UCF···D1**
Closed end: **SM-UCF···D1**

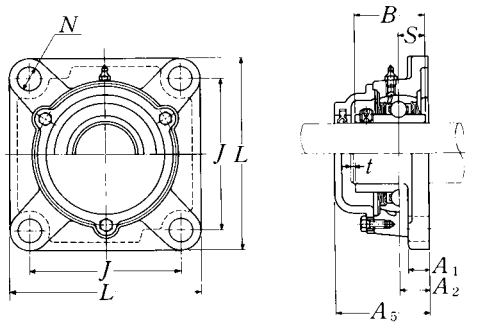

Cast dust cover type
Open end: **C-UCF···D1**
Closed end: **CM-UCF···D1**

Housing [1] number	Unit number [1] pressed steel dust cover type	Unit number [1] cast dust cover type	Nominal dimensions mm / inch t max.	A_4	A_5	Mass of unit kg / lb UCF	S(SM)	C(CM)
F210D1	S(SM)-UCF210D1	C(CM)-UCF210D1	3	65.5	72	2.5	2.5	3.0
F210D1	S(SM)-UCF210-113D1	C(CM)-UCF210-113D1						
F210D1	S(SM)-UCF210-114D1	C(CM)-UCF210-114D1	1/8	2 19/32	2 27/32	5.5	5.5	6.6
F210D1	S(SM)-UCF210-115D1	C(CM)-UCF210-115D1						
F210D1	S(SM)-UCF210-200D1	C(CM)-UCF210-200D1						
F211D1	S(SM)-UCF211D1	C(CM)-UCF211D1	4	71	75	3.3	3.4	4.0
F211D1	S(SM)-UCF211-200D1	C(CM)-UCF211-200D1						
F211D1	S(SM)-UCF211-201D1	C(CM)-UCF211-201D1	5/32	2 25/32	2 15/16	7.3	7.5	8.8
F211D1	S(SM)-UCF211-202D1	C(CM)-UCF211-202D1						
F211D1	S(SM)-UCF211-203D1	C(CM)-UCF211-203D1						
F212D1	S(SM)-UCF212D1	C(CM)-UCF212D1	4	80	86	3.9	4.1	4.8
F212D1	S(SM)-UCF212-204D1	C(CM)-UCF212-204D1						
F212D1	S(SM)-UCF212-205D1	C(CM)-UCF212-205D1	5/32	3 25/32	3 3/8	8.6	9.0	11
F212D1	S(SM)-UCF212-206D1	C(CM)-UCF212-206D1						
F212D1	S(SM)-UCF212-207D1	C(CM)-UCF212-207D1						
F213D1	S(SM)-UCF213D1	C(CM)-UCF213D1	4	83.5	90	5.5	5.6	6.4
F213D1	S(SM)-UCF213-208D1	C(CM)-UCF213-208D1	5/32	3 9/32	3 17/32	12	12	14
F213D1	S(SM)-UCF213-209D1	C(CM)-UCF213-209D1						
F214D1	—	C(CM)-UCF214D1	4	—	98	6.3	—	7.4
F214D1		C(CM)-UCF214-210D1						
F214D1	—	C(CM)-UCF214-211D1	5/32	—	3 27/32	14	—	16
F214D1		C(CM)-UCF214-212D1						
F215D1	—	C(CM)-UCF215D1	4	—	102	6.6	—	7.9
F215D1		C(CM)-UCF215-213D1						
F215D1	—	C(CM)-UCF215-214D1	5/32	—	4 1/32	15	—	17
F215D1		C(CM)-UCF215-215D1						
F215D1		C(CM)-UCF215-300D1						
F216D1	—	C(CM)-UCF216D1	4	—	106	7.9	—	9.3
F216D1		C(CM)-UCF216-301D1						
F216D1	—	C(CM)-UCF216-302D1	5/32	—	4 3/16	17	—	21
F216D1		C(CM)-UCF216-303D1						

Square flanged units cast housing
Set screw type

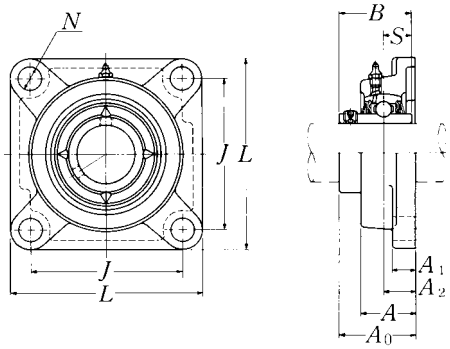

Shaft dia. mm / inch	Unit number [1]	Nominal dimensions mm / inch L	J	A2	A1	A	N	A0	B	S	Bolt size mm / inch	Bearing number
85	**UCF217D1**	220	175	36	24	63	23	87.6	85.7	34.1	M20	UC217D1
3 1/4	**UCF217-304D1**											UC217-304D1
3 5/16	**UCF217-305D1**	8 21/32	6 57/64	1 27/64	15/16	2 15/32	29/32	3 29/64	3.3740	1.343	3/4	UC217-305D1
3 7/16	**UCF217-307D1**											UC217-307D1
90	**UCF218D1**	235	187	40	24	68	23	96.3	96	39.7	M20	UC218D1
3 1/2	**UCF218-308D1**	9 1/4	7 23/64	1 37/64	15/16	2 11/16	29/32	3 51/64	3.7795	1.563	3/4	UC218-308D1

Remarks: 1) These numbers indicate relubricatable type. If maintenance free type is needed, please order without suffix "D1".
Note: Please refer to page 36 for size of grease fitting.

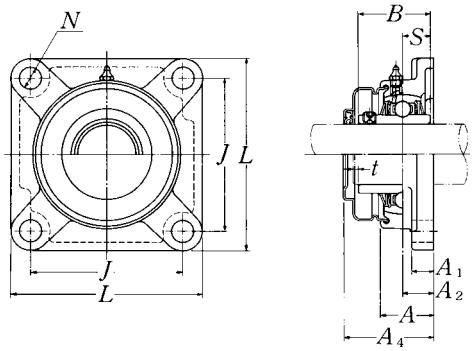

Pressed steel dust cover type
Open end: **S-UCF···D1**
Closed end: **SM-UCF···D1**

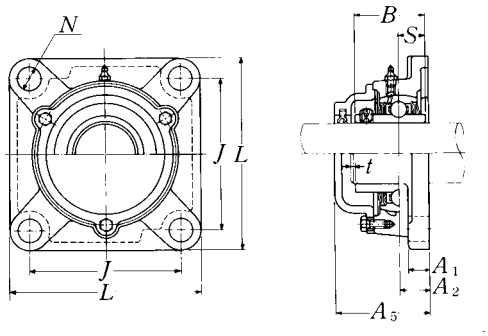

Cast dust cover type
Open end: **C-UCF···D1**
Closed end: **CM-UCF···D1**

Housing [1] number	Unit number [1] pressed steel dust cover type	Unit number [1] cast dust cover type	Nominal dimensions mm / inch			Mass of unit kg / lb		
			t max.	A_4	A_5	UCF	S(SM)	C(CM)
F217D1	—	C(CM)-UCF217D1	5	—	114	9.8	—	12
F217D1	—	C(CM)-UCF217-304D1	13/64	—	4 1/2	22	—	26
F217D1		C(CM)-UCF217-305D1						
F217D1		C(CM)-UCF217-307D1						
F218D1	—	C(CM)-UCF218D1	5	—	122	12	—	13
F218D1	—	C(CM)-UCF218-308D1	13/64	—	4 13/16	26	—	29

Square flanged units cast housing
Set screw type

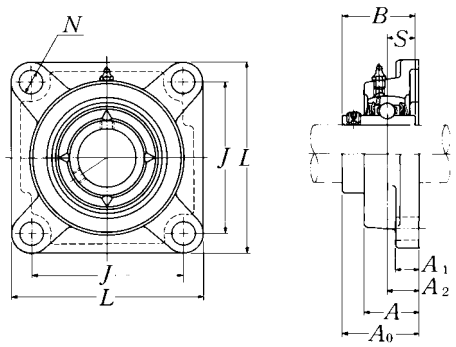

Shaft dia. mm / inch	Unit number [1]	Nominal dimensions L	J	A2	A1	A	N	A0	B	S	Bolt size mm / inch	Bearing number
		mm					inch					
25	UCF305D1	110	80	16	13	29	16	39	38	15	M14	UC305D1
13/16	UCF305-013D1											UC305-013D1
7/8	UCF305-014D1	4 11/32	3 5/32	5/8	1/2	1 5/32	5/8	1 17/32	1.4961	0.591	1/2	UC305-014D1
15/16	UCF305-015D1											UC305-015D1
1	UCF305-100D1											UC305-100D1
30	UCF306D1	125	95	18	15	32	16	44	43	17	M14	UC306D1
1 1/16	UCF306-101D1											UC306-101D1
1 1/8	UCF306-102D1	4 29/32	3 47/64	45/64	19/32	1 1/4	5/8	1 47/64	1.6929	0.669	1/2	UC306-102D1
1 3/16	UCF306-103D1											UC306-103D1
35	UCF307D1	135	100	20	16	36	19	49	48	19	M16	UC307D1
1 1/4	UCF307-104D1											UC307-104D1
1 5/16	UCF307-105D1	5 5/16	3 15/16	25/32	5/8	1 13/32	3/4	1 59/64	1.8898	0.748	5/8	UC307-105D1
1 3/8	UCF307-106D1											UC307-106D1
1 7/16	UCF307-107D1											UC307-107D1
40	UCF308D1	150	112	23	17	40	19	56	52	19	M16	UC308D1
1 1/2	UCF308-108D1	5 29/32	4 13/32	29/32	21/32	1 9/16	3/4	2 13/64	2.0472	0.748	5/8	UC308-108D1
1 9/16	UCF308-109D1											UC308-109D1
45	UCF309D1	160	125	25	18	44	19	60	57	22	M16	UC309D1
1 5/8	UCF309-110D1											UC309-110D1
1 11/16	UCF309-111D1	6 5/16	4 59/64	63/64	23/32	1 23/32	3/4	2 23/64	2.2441	0.866	5/8	UC309-111D1
1 3/4	UCF309-112D1											UC309-112D1
50	UCF310D1	175	132	28	19	48	23	67	61	22	M20	UC310D1
1 13/16	UCF310-113D1											UC310-113D1
1 7/8	UCF310-114D1	6 7/8	5 13/64	1 7/64	3/4	1 7/8	29/32	2 41/64	2.4016	0.866	3/4	UC310-114D1
1 15/16	UCF310-115D1											UC310-115D1
55	UCF311D1	185	140	30	20	52	23	71	66	25	M20	UC311D1
2	UCF311-200D1											UC311-200D1
2 1/16	UCF311-201D1	7 9/32	5 33/64	1 3/16	25/32	2 1/16	29/32	2 51/64	2.5984	0.984	3/4	UC311-201D1
2 1/8	UCF311-202D1											UC311-202D1
2 3/16	UCF311-203D1											UC311-203D1

Remarks: 1) These numbers indicate relubricatable type. If maintenance free type is needed, please order without suffix "D1".
Note: Please refer to page 36 for size of grease fitting.

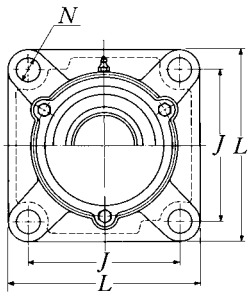

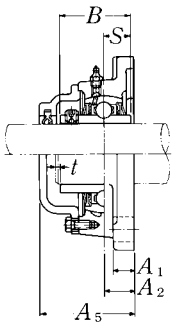

Cast dust cover type
Open end: **C-UCF···D1**
Closed end: **CM-UCF···D1**

Housing [1] number	Unit number [1] cast dust cover type	Nominal dimensions mm t max.	Nominal dimensions inch A_5	Mass of unit kg UCF	Mass of unit lb C(CM)
F305D1	C(CM)-UCF305D1	2	56	1.1	1.4
F305D1	C(CM)-UCF305-013D1				
F305D1	C(CM)-UCF305-014D1	5/64	2 7/32	2.4	3.1
F305D1	C(CM)-UCF305-015D1				
F305D1	C(CM)-UCF305-100D1				
F306D1	C(CM)-UCF306D1	2	60	1.6	2.1
F306D1	C(CM)-UCF306-101D1				
F306D1	C(CM)-UCF306-102D1	5/64	2 3/8	3.5	4.6
F306D1	C(CM)-UCF306-103D1				
F307D1	C(CM)-UCF307D1	3	68	2.1	2.6
F307D1	C(CM)-UCF307-104D1				
F307D1	C(CM)-UCF307-105D1	1/8	2 11/16	4.6	5.7
F307D1	C(CM)-UCF307-106D1				
F307D1	C(CM)-UCF307-107D1				
F308D1	C(CM)-UCF308D1	3	76	2.7	3.4
F308D1	C(CM)-UCF308-108D1	1/8	3	6.0	7.5
F308D1	C(CM)-UCF308-109D1				
F309D1	C(CM)-UCF309D1	3	80	3.4	4.3
F309D1	C(CM)-UCF309-110D1				
F309D1	C(CM)-UCF309-111D1	1/8	3 5/32	7.5	9.5
F309D1	C(CM)-UCF309-112D1				
F310D1	C(CM)-UCF310D1	3	88	4.5	5.8
F310D1	C(CM)-UCF310-113D1				
F310D1	C(CM)-UCF310-114D1	1/8	3 15/32	9.9	13
F310D1	C(CM)-UCF310-115D1				
F311D1	C(CM)-UCF311D1	4	92	5.3	6.7
F311D1	C(CM)-UCF311-200D1				
F311D1	C(CM)-UCF311-201D1	5/32	3 5/8	12	15
F311D1	C(CM)-UCF311-202D1				
F311D1	C(CM)-UCF311-203D1				

Square flanged units cast housing
Set screw type

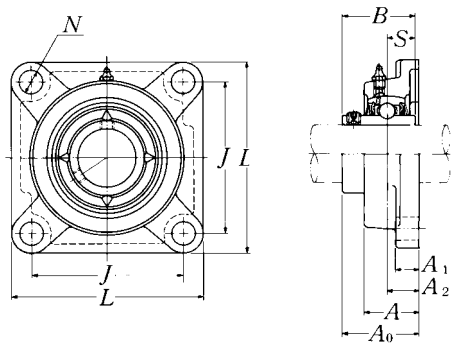

Shaft dia. mm / inch	Unit number [1]	Nominal dimensions mm / inch L	J	A2	A1	A	N	A0	B	S	Bolt size mm / inch	Bearing number
60	**UCF312D1**	195	150	33	22	56	23	78	71	26	M20	UC312D1
2 1/4	**UCF312-204D1**											UC312-204D1
2 5/16	**UCF312-205D1**	7 11/16	5 29/32	1 19/64	7/8	2 7/32	29/32	3 5/64	2.7953	1.024	3/4	UC312-205D1
2 3/8	**UCF312-206D1**											UC312-206D1
2 7/16	**UCF312-207D1**											UC312-207D1
65	**UCF313D1**	208	166	33	22	58	23	78	75	30	M20	UC313D1
2 1/2	**UCF313-208D1**	8 3/16	6 17/32	1 19/64	7/8	2 9/32	29/32	3 5/64	2.9528	1.181	3/4	UC313-208D1
2 9/16	**UCF313-209D1**											UC313-209D1
70	**UCF314D1**	226	178	36	25	61	25	81	78	33	M22	UC314D1
2 5/8	**UCF314-210D1**											UC314-210D1
2 11/16	**UCF314-211D1**	8 29/32	6 1/64	1 27/64	31/32	2 13/32	63/64	3 3/16	3.0709	1.299	7/8	UC314-211D1
2 3/4	**UCF314-212D1**											UC314-212D1
75	**UCF315D1**	236	184	39	25	66	25	89	82	32	M22	UC315D1
2 13/16	**UCF315-213D1**											UC315-213D1
2 7/8	**UCF315-214D1**	9 9/32	7 1/4	1 17/32	31/32	2 19/32	63/64	3 1/2	3.2283	1.260	7/8	UC315-214D1
2 15/16	**UCF315-215D1**											UC315-215D1
3	**UCF315-300D1**											UC315-300D1
80	**UCF316D1**	250	196	38	27	68	31	90	86	34	M27	UC316D1
3 1/16	**UCF316-301D1**											UC316-301D1
3 1/8	**UCF316-302D1**	9 27/32	7 23/32	1 1/2	1 1/16	2 11/16	1 7/32	3 35/64	3.3858	1.339	1	UC316-302D1
3 3/16	**UCF316-303D1**											UC316-303D1
85	**UCF317D1**	260	204	44	27	74	31	100	96	40	M27	UC317D1
3 1/4	**UCF317-304D1**											UC317-304D1
3 5/16	**UCF317-305D1**	10 1/4	8 1/32	1 47/64	1 1/16	2 29/32	1 7/32	3 15/16	3.7795	1.575	1	UC317-305D1
3 7/16	**UCF317-307D1**											UC317-307D1
90	**UCF318D1**	280	216	44	30	76	35	100	96	40	M30	UC318D1
3 7/16	**UCF318-307D1**	11 1/32	8 1/2	1 47/64	1 3/16	3	1 3/8	3 15/16	3.7795	1.575	1 1/8	UC318-307D1
3 1/2	**UCF318-308D1**											UC318-308D1

Remarks: 1) These numbers indicate relubricatable type. If maintenance free type is needed, please order without suffix "D1".
Note: Please refer to page 36 for size of grease fitting.

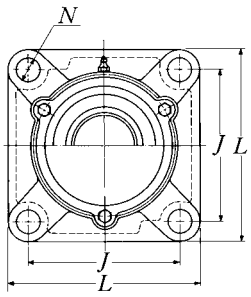

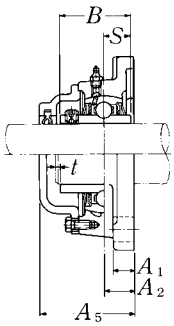

Cast dust cover type
Open end: **C-UCF···D1**
Closed end: **CM-UCF···D1**

Housing [1] number	Unit number [1] cast dust cover type	Nominal dimensions mm t max.	Nominal dimensions inch A_5	Mass of unit kg UCF	Mass of unit lb C(CM)
F312D1	C(CM)-UCF312D1	4	100	6.3	7.8
F312D1	C(CM)-UCF312-204D1	5/32	3 15/16	14	17
F312D1	C(CM)-UCF312-205D1				
F312D1	C(CM)-UCF312-206D1				
F312D1	C(CM)-UCF312-207D1				
F313D1	C(CM)-UCF313D1	4	103	8.0	9.7
F313D1	C(CM)-UCF313-208D1	5/32	4 1/16	18	21
F313D1	C(CM)-UCF313-209D1				
F314D1	C(CM)-UCF314D1	4	106	9.4	11
F314D1	C(CM)-UCF314-210D1	5/32	4 3/16	21	24
F314D1	C(CM)-UCF314-211D1				
F314D1	C(CM)-UCF314-212D1				
F315D1	C(CM)-UCF315D1	4	114	11	13
F315D1	C(CM)-UCF315-213D1	5/32	4 1/2	24	29
F315D1	C(CM)-UCF315-214D1				
F315D1	C(CM)-UCF315-215D1				
F315D1	C(CM)-UCF315-300D1				
F316D1	C(CM)-UCF316D1	4	116	14	16
F316D1	C(CM)-UCF316-301D1	5/32	4 9/16	31	35
F316D1	C(CM)-UCF316-302D1				
F316D1	C(CM)-UCF316-303D1				
F317D1	C(CM)-UCF317D1	5	129	15	19
F317D1	C(CM)-UCF317-304D1	13/64	5 3/32	33	42
F317D1	C(CM)-UCF317-305D1				
F317D1	C(CM)-UCF317-307D1				
F318D1	C(CM)-UCF318D1	5	129	19	23
F318D1	C(CM)-UCF318-307D1	13/64	5 3/32	42	51
F318D1	C(CM)-UCF318-308D1				

Square flanged units cast housing
Set screw type

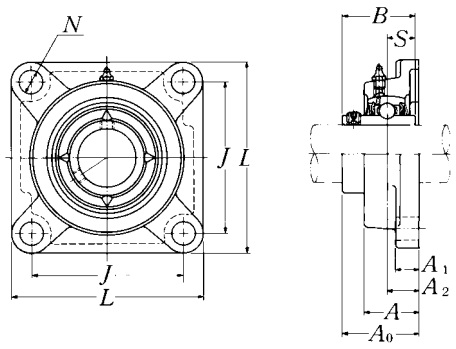

Shaft dia. mm / inch	Unit number [1]	Nominal dimensions L	J	A2	A1	A	N	A0	B	S	Bolt size mm / inch	Bearing number
		mm					inch					
95	UCF319D1	290	228	59	30	94	35	121	103	41	M30	UC319D1
3 5/8	UCF319-310D1											UC319-310D1
3 11/16	UCF319-311D1	11 13/32	8 31/32	2 21/64	1 3/16	3 11/16	1 3/8	4 49/64	4.0551	1.614	1 1/8	UC319-311D1
3 3/4	UCF319-312D1											UC319-312D1
100	UCF320D1	310	242	59	32	94	38	125	108	42	M33	UC320D1
3 13/16	UCF320-313D1											UC320-313D1
3 7/8	UCF320-314D1	12 7/32	9 17/32	2 21/64	1 1/4	3 11/16	1 1/2	4 59/64	4.2520	1.654	1 1/4	UC320-314D1
3 15/16	UCF320-315D1											UC320-315D1
4	UCF320-400D1											UC320-400D1
105	UCF321D1	310	242	59	32	94	38	127	112	44	M33	UC321D1
110	UCF322D1	340	266	60	35	96	41	131	117	46	M36	UC322D1
120	UCF324D1	370	290	65	40	110	41	140	126	51	M36	UC324D1
130	UCF326D1	410	320	65	45	115	41	146	135	54	M36	UC326D1
140	UCF328D1	450	350	75	55	125	41	161	145	59	M36	UC328D1

Remarks: 1) These numbers indicate relubricatable type. If maintenance free type is needed, please order without suffix "D1".
Note: Please refer to page 36 for size of grease fitting.

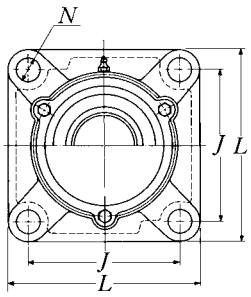

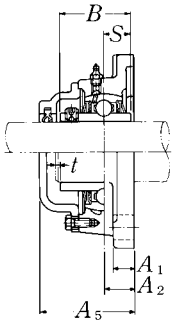

Cast dust cover type
Open end: **C-UCF···D1**
Closed end: **CM-UCF···D1**

Housing [1] number	Unit number [1] cast dust cover type	Nominal dimensions		Mass of unit	
		mm	inch	kg	lb
		t max.	A_5	UCF	C(CM)
F319D1	C(CM)-UCF319D1	5	149	22	25
F319D1	C(CM)-UCF319-310D1				
F319D1	C(CM)-UCF319-311D1	13/64	5 7/8	49	55
F319D1	C(CM)-UCF319-312D1				
F320D1	C(CM)-UCF320D1	5	154	27	32
F320D1	C(CM)-UCF320-313D1				
F320D1	C(CM)-UCF320-314D1	13/64	6 1/16	60	71
F320D1	C(CM)-UCF320-315D1				
F320D1	C(CM)-UCF320-400D1				
F321D1	C(CM)-UCF321D1	5	156	26	32
F322D1	C(CM)-UCF322D1	5	160	34	40
F324D1	C(CM)-UCF324D1	5	172	48	56
F326D1	C(CM)-UCF326D1	6	178	63	73
F328D1	C(CM)-UCF328D1	6	192	90	100

Square flanged units cast housing
Set screw type

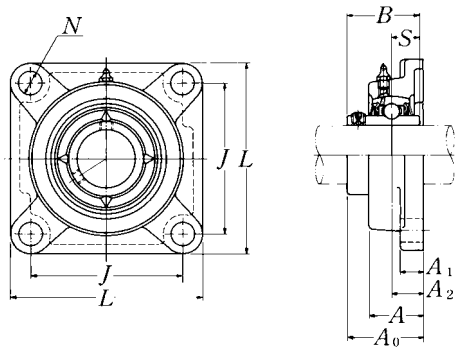

Shaft dia. mm / inch	Unit number [1]	Nominal dimensions L	J	A2	A1	A	N	A0	B	S	Bolt size mm / inch	Bearing number
		mm					inch					
25	UCFX05D1	108	83	18	13	30	12	40.2	38.1	15.9	M10	UCX05D1
13/16	UCFX05-013D1											UCX05-013D1
7/8	UCFX05-014D1	4 1/4	3 17/64	45/64	1/2	1 3/16	15/32	1 37/64	1.5000	0.626	3/8	UCX05-014D1
15/16	UCFX05-015D1											UCX05-015D1
1	UCFX05-100D1											UCX05-100D1
30	UCFX06D1	117	92	19	14	34	16	44.4	42.9	17.5	M14	UCX06D1
1 1/16	UCFX06-101D1											UCX06-101D1
1 1/8	UCFX06-102D1	4 19/32	3 5/8	3/4	9/16	1 11/32	5/8	1 3/4	1.6890	0.689	1/2	UCX06-102D1
1 3/16	UCFX06-103D1											UCX06-103D1
1 1/4	UCFX06-104D1											UC207-104D1
35	UCFX07D1	130	102	21	14	38	16	51.2	49.2	19	M14	UCX07D1
1 5/16	UCFX07-105D1											UCX07-105D1
1 3/8	UCFX07-106D1	5 1/8	4 1/64	53/64	9/16	1 1/2	5/8	2 1/64	1.9370	0.748	1/2	UCX07-106D1
1 7/16	UCFX07-107D1											UCX07-107D1
40	UCFX08D1	137	105	22	14	40	19	52.2	49.2	19	M16	UCX08D1
1 1/2	UCFX08-108D1	5 13/32	4 9/64	55/64	9/16	1 9/16	3/4	2 1/16	1.9370	0.748	5/8	UCX08-108D1
1 9/16	UCFX08-109D1											UCX08-109D1
45	UCFX09D1	143	111	23	14	40	19	55.6	51.6	19	M16	UCX09D1
1 5/8	UCFX09-110D1											UCX09-110D1
1 11/16	UCFX09-111D1	5 5/8	4 3/8	29/32	9/16	1 9/16	3/4	2 3/16	2.0315	0.748	5/8	UCX09-111D1
1 3/4	UCFX09-112D1											UCX09-112D1
1 13/16	UCFX09-113D1											UC210-113D1
50	UCFX10D1	162	130	26	20	44	19	59.4	55.6	22.2	M16	UCX10D1
1 7/8	UCFX10-114D1											UCX10-114D1
1 15/16	UCFX10-115D1	6 3/8	5 1/8	1 1/32	25/32	1 23/32	3/4	2 11/32	2.1890	0.874	5/8	UCX10-115D1
2	UCFX10-200D1											UC211-200D1

Remarks: 1) These numbers indicate relubricatable type. If maintenance free type is needed, please order without suffix "D1".
Note: Please refer to page 36 for size of grease fitting.

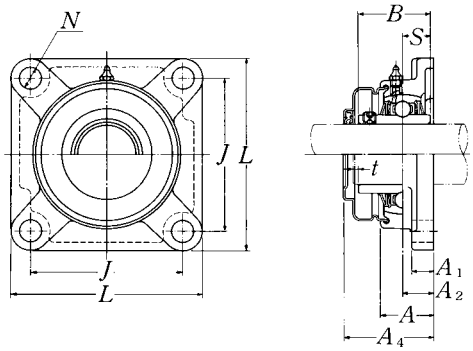

Pressed steel dust cover type
Open end: **S-UCFX···D1**
Closed end: **SM-UCFX···D1**

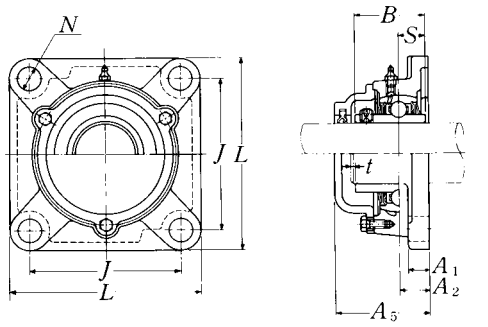

Cast dust cover type
Open end: **C-UCFX···D1**
Closed end: **CM-UCFX···D1**

Housing [1] number	Unit number [1] pressed steel dust cover type	Unit number [1] cast dust cover type	Nominal dimensions mm		inch	Mass of unit kg		lb
			t max.	A_4	A_5	UCFX	S(SM)	C(CM)
FX05D1	S(SM)-UCFX05D1	C(CM)-UCFX05D1	2	49	56	1.1	1.2	1.3
FX05D1	S(SM)-UCFX05-013D1	C(CM)-UCFX05-013D1						
FX05D1	S(SM)-UCFX05-014D1	C(CM)-UCFX05-014D1	5/64	1 15/16	2 7/32	2.4	2.7	2.9
FX05D1	S(SM)-UCFX05-015D1	C(CM)-UCFX05-015D1						
FX05D1	S(SM)-UCFX05-100D1	C(CM)-UCFX05-100D1						
FX06D1	S(SM)-UCFX06D1	C(CM)-UCFX06D1	2	55	59	1.7	1.8	1.9
FX06D1	S(SM)-UCFX06-101D1	C(CM)-UCFX06-101D1						
FX06D1	S(SM)-UCFX06-102D1	C(CM)-UCFX06-102D1	5/64	2 5/32	2 5/16	3.8	4.0	4.2
FX06D1	S(SM)-UCFX06-103D1	C(CM)-UCFX06-103D1						
FX06D1	S(SM)-UCFX06-104D1	C(CM)-UCFX06-104D1						
FX07D1	S(SM)-UCFX07D1	C(CM)-UCFX07D1	3	62	66	2.1	2.2	2.5
FX07D1	S(SM)-UCFX07-105D1	C(CM)-UCFX07-105D1						
FX07D1	S(SM)-UCFX07-106D1	C(CM)-UCFX07-106D1	1/8	2 7/16	2 19/32	4.6	4.9	5.5
FX07D1	S(SM)-UCFX07-107D1	C(CM)-UCFX07-107D1						
FX08D1	S(SM)-UCFX08D1	C(CM)-UCFX08D1	3	63	70	2.3	2.4	2.7
FX08D1	S(SM)-UCFX08-108D1	C(CM)-UCFX08-108D1	1/8	2 15/32	2 3/4	5.1	5.3	6.0
FX08D1	S(SM)-UCFX08-109D1	C(CM)-UCFX08-109D1						
FX09D1	S(SM)-UCFX09D1	C(CM)-UCFX09D1	3	65.5	73	2.5	2.6	3.0
FX09D1	S(SM)-UCFX09-110D1	C(CM)-UCFX09-110D1						
FX09D1	S(SM)-UCFX09-111D1	C(CM)-UCFX09-111D1	1/8	2 19/32	2 7/8	5.5	5.7	6.6
FX09D1	S(SM)-UCFX09-112D1	C(CM)-UCFX09-112D1						
FX09D1	S(SM)-UCFX09-113D1	C(CM)-UCFX09-113D1						
FX10D1	S(SM)-UCFX10D1	C(CM)-UCFX10D1	3	71	76	3.8	3.9	4.3
FX10D1	S(SM)-UCFX10-114D1	C(CM)-UCFX10-114D1						
FX10D1	S(SM)-UCFX10-115D1	C(CM)-UCFX10-115D1	1/8	2 25/32	3	8.4	8.6	9.5
FX10D1	S(SM)-UCFX10-200D1	C(CM)-UCFX10-200D1						

Square flanged units cast housing
Set screw type

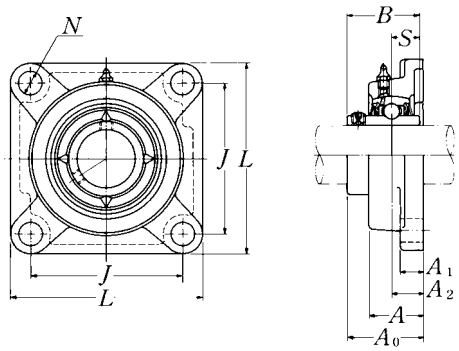

Shaft dia. mm / inch	Unit number [1]	Nominal dimensions L	J	A2	A1	A	N	A0	B	S	Bolt size mm / inch	Bearing number
		mm					inch					
55	UCFX11D1	175	143	29	20	49	19	68.7	65.1	25.4	M16	UCX11D1
2 1/16	UCFX11-201D1											UCX11-201D1
2 1/8	UCFX11-202D1											UCX11-202D1
2 3/16	UCFX11-203D1	6 7/8	5 5/8	1 9/64	25/32	1 15/16	3/4	2 45/64	2.5630	1.000	5/8	UCX11-203D1
2 1/4	UCFX11-204D1											UC212-204D1
2 5/16	UCFX11-205D1											UC212-205D1
60	UCFX12D1	187	149	34	21	59	19	73.7	65.1	25.4	M16	UCX12D1
2 3/8	UCFX12-206D1	7 3/8	5 55/64	1 11/32	13/16	2 5/16	3/4	2 29/32	2.5630	1.000	5/8	UCX12-206D1
2 7/16	UCFX12-207D1											UCX12-207D1
65	UCFX13D1	187	149	34	21	59	19	78.4	74.6	30.2	M16	UCX13D1
2 1/2	UCFX13-208D1	7 3/8	5 55/64	1 11/32	13/16	2 5/16	3/4	3 3/32	2.9370	1.189	5/8	UCX13-208D1
2 9/16	UCFX13-209D1											UCX13-209D1
70	UCFX14D1	197	152	37	24	60	23	81.5	77.8	33.3	M20	UCX14D1
2 5/8	UCFX14-210D1											UCX14-210D1
2 11/16	UCFX14-211D1	7 3/4	5 63/64	1 29/64	15/16	2 3/8	29/32	3 13/64	3.0630	1.311	3/4	UCX14-211D1
2 3/4	UCFX14-212D1											UCX14-212D1
75	UCFX15D1	197	152	40	24	68	23	89.3	82.6	33.3	M20	UCX15D1
2 13/16	UCFX15-213D1											UCX15-213D1
2 7/8	UCFX15-214D1	7 3/4	5 63/64	1 37/64	15/16	2 11/16	29/32	3 33/64	3.2520	1.311	3/4	UCX15-214D1
2 15/16	UCFX15-215D1											UCX15-215D1
3	UCFX15-300D1											UCX15-300D1
80	UCFX16D1	214	171	40	24	70	23	91.6	85.7	34.1	M20	UCX16D1
3 1/16	UCFX16-301D1											UCX16-301D1
3 1/8	UCFX16-302D1	8 7/16	6 47/64	1 37/64	15/16	2 3/4	29/32	3 39/64	3.3740	1.343	3/4	UCX16-302D1
3 3/16	UCFX16-303D1											UCX16-303D1
3 1/4	UCFX16-304D1											UC217-304D1
85	UCFX17D1	214	171	40	24	70	23	96.3	96	39.7	M20	UCX17D1
3 5/16	UCFX17-305D1	8 7/16	6 47/64	1 37/64	15/16	2 3/4	29/32	3 51/64	3.7795	1.563	3/4	UCX17-305D1
3 7/16	UCFX17-307D1											UCX17-307D1

Remarks: 1) These numbers indicate relubricatable type. If maintenance free type is needed, please order without suffix "D1".
Note: Please refer to page 36 for size of grease fitting.

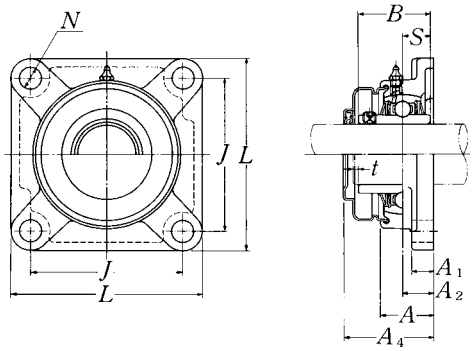

Pressed steel dust cover type
Open end: **S-UCFX···D1**
Closed end: **SM-UCFX···D1**

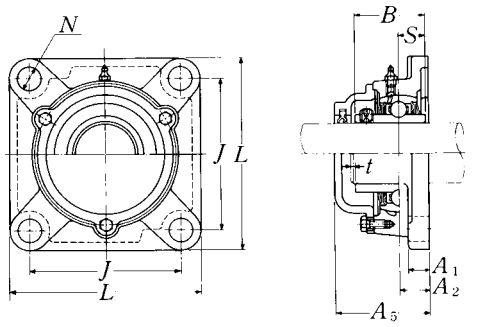

Cast dust cover type
Open end: **C-UCFX···D1**
Closed end: **CM-UCFX···D1**

Housing number [1]	Unit number [1] pressed steel dust cover type	Unit number [1] cast dust cover type	Nominal dimensions mm / inch: t max.	A_4	A_5	Mass of unit kg / lb: UCFX	S(SM)	C(CM)
FX11D1	S(SM)-UCFX11D1	C(CM)-UCFX11D1	4	80	86	4.8	5.0	5.5
FX11D1	S(SM)-UCFX11-201D1	C(CM)-UCFX11-201D1						
FX11D1	S(SM)-UCFX11-202D1	C(CM)-UCFX11-202D1						
FX11D1	S(SM)-UCFX11-203D1	C(CM)-UCFX11-203D1	5/32	3 25/32	3 3/8	11	11	12
FX11D1	S(SM)-UCFX11-204D1	C(CM)-UCFX11-204D1						
FX11D1	S(SM)-UCFX11-205D1	C(CM)-UCFX11-205D1						
FX12D1	S(SM)-UCFX12D1	C(CM)-UCFX12D1	4	83.5	94	6.4	6.6	7.3
FX12D1	S(SM)-UCFX12-206D1	C(CM)-UCFX12-206D1	5/32	3 9/32	3 11/16	14	15	16
FX12D1	S(SM)-UCFX12-207D1	C(CM)-UCFX12-207D1						
FX13D1	—	C(CM)-UCFX13D1	4	—	101	6.7	—	7.8
FX13D1	—	C(CM)-UCFX13-208D1	5/32	—	3 31/32	15	—	17
FX13D1		C(CM)-UCFX13-209D1						
FX14D1	—	C(CM)-UCFX14D1	4	—	105	7.1	—	8.3
FX14D1		C(CM)-UCFX14-210D1						
FX14D1	—	C(CM)-UCFX14-211D1	5/32	—	4 1/8	16	—	18
FX14D1		C(CM)-UCFX14-212D1						
FX15D1	—	C(CM)-UCFX15D1	4	—	112	8.6	—	9.9
FX15D1		C(CM)-UCFX15-213D1						
FX15D1	—	C(CM)-UCFX15-214D1	5/32	—	4 13/32	19	—	22
FX15D1		C(CM)-UCFX15-215D1						
FX15D1		C(CM)-UCFX15-300D1						
FX16D1	—	C(CM)-UCFX16D1	4	—	118	11	—	12
FX16D1		C(CM)-UCFX16-301D1						
FX16D1	—	C(CM)-UCFX16-302D1	5/32	—	4 21/32	24	—	26
FX16D1		C(CM)-UCFX16-303D1						
FX16D1		C(CM)-UCFX16-304D1						
FX17D1	—	C(CM)-UCFX17D1	5	—	122	12	—	14
FX17D1	—	C(CM)-UCFX17-305D1	13/64	—	4 13/16	26	—	31
FX17D1		C(CM)-UCFX17-307D1						

Square flanged units cast housing
Set screw type

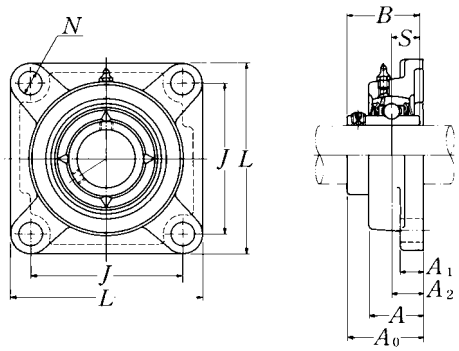

Shaft dia. mm / inch	Unit number [1]	Nominal dimensions mm / inch L	J	A2	A1	A	N	A0	B	S	Bolt size mm / inch	Bearing number
90	**UCFX18D1**	214	171	45	24	76	23	106.1	104	42.9	M20	UCX18D1
3 7/16	**UCFX18-307D1**	8 7/16	6 47/64	1 49/64	15/16	3	29/32	4 11/64	4.0945	1.689	3/4	UCX18-307D1
3 1/2	**UCFX18-308D1**											UCX18-308D1
100	**UCFX20D1**	268	211	59	31	97	31	127.3	117.5	49.2	M27	UCX20D1
3 13/16	**UCFX20-313D1**											UCX20-313D1
3 7/8	**UCFX20-314D1**	10 9/16	8 5/16	2 21/64	1 7/32	3 13/16	1 7/32	5 1/64	4.6260	1.937	1	UCX20-314D1
3 15/16	**UCFX20-315D1**											UCX20-315D1
4	**UCFX20-400D1**											UCX20-400D1

Remarks: 1) These numbers indicate relubricatable type. If maintenance free type is needed, please order without suffix "D1".
Note: Please refer to page 36 for size of grease fitting.

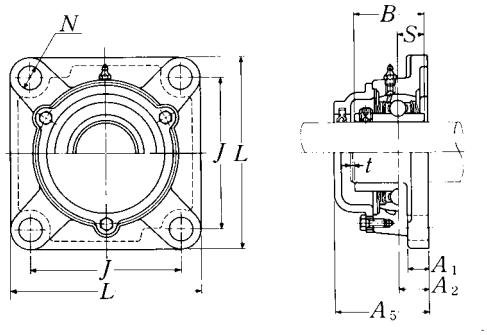

Cast dust cover type
Open end: **C-UCFX···D1**
Closed end: **CM-UCFX···D1**

Housing [1] number	Unit number [1] cast dust cover type	Nominal dimensions		Mass of unit	
		mm t max.	inch A_5	kg UCFX	lb C(CM)
FX18D1	**C(CM)-UCFX18D1**	5	135	13	15
FX18D1	**C(CM)-UCFX18-307D1**	13/64	5 5/16	29	33
FX18D1	**C(CM)-UCFX18-308D1**				
FX20D1	**C(CM)-UCFX20D1**	5	146.5	21	23
FX20D1	**C(CM)-UCFX20-313D1**				
FX20D1	**C(CM)-UCFX20-314D1**	13/64	5 49/64	46	51
FX20D1	**C(CM)-UCFX20-315D1**				
FX20D1	**C(CM)-UCFX20-400D1**				

Square flanged units (Steel series)
Set screw type

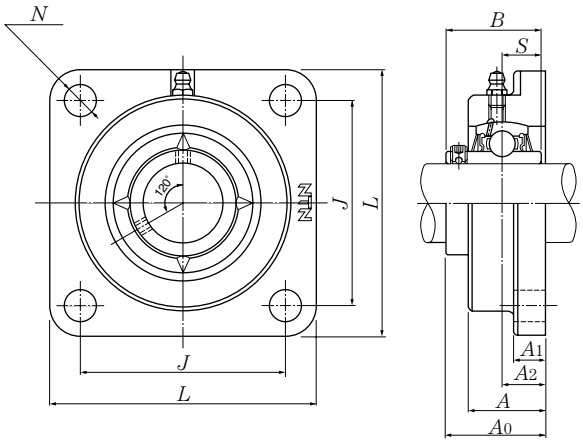

Shaft dia. mm	Unit number [1]	Nominal dimensions mm									Bolt size mm	Bearing number
		L	J	A_2	A_1	A	N	A_0	B	S		
12	UCFG201D1	86	64	15	11	25.5	12	33.3	31	12.7	M10	UC201D1
15	UCFG202D1	86	64	15	11	25.5	12	33.3	31	12.7	M10	UC202D1
17	UCFG203D1	86	64	15	11	25.5	12	33.3	31	12.7	M10	UC203D1
20	UCFG204D1	86	64	15	11	25.5	12	33.3	31	12.7	M10	UC204D1
25	UCFG205D1	95	70	16	13	27	12	35.7	34	14.3	M10	UC205D1
30	UCFG206D1	108	83	18	13	31	12	40.2	38.1	15.9	M10	UC206D1
35	UCFG207D1	117	92	19	15	34	14	44.4	42.9	17.5	M12	UC207D1
40	UCFG208D1	130	102	21	15	36	16	51.2	49.2	19	M14	UC208D1
45	UCFG209D1	137	105	22	16	38	16	52.2	49.2	19	M14	UC209D1
50	UCFG210D1	143	111	22	16	40	16	54.6	51.6	19	M14	UC210D1
55	UCFG211D1	162	130	25	18	43	19	58.4	55.6	22.2	M16	UC211D1
60	UCFG212D1	175	143	29	18	48	19	68.7	65.1	25.4	M16	UC212D1
65	UCFG213D1	187	149	30	22	50	19	69.7	65.1	25.4	M16	UC213D1
70	UCFG214D1	193	152	31	22	54	19	75.4	74.6	30.2	M16	UC214D1
75	UCFG215D1	200	159	34	22	56	19	78.5	77.8	33.3	M16	UC215D1
80	UCFG216D1	208	165	34	22	58	23	83.3	82.6	33.3	M20	UC216D1
85	UCFG217D1	220	175	36	24	63	23	87.6	85.7	34.1	M20	UC217D1
90	UCFG218D1	235	187	40	24	68	23	96.3	96	39.7	M20	UC218D1

Remarks: 1) These numbers indicate relubricatable type. If maintenance free type is needed, please order without suffix "D1".
Note: Please refer to page 36 for size of grease fitting.

Housing [1)] number	Mass of unit kg
FG204D1	0.8
FG204D1	0.8
FG204D1	0.8
FG204D1	0.8
FG205D1	1.0
FG206D1	1.5
FG207D1	2.0
FG208D1	2.4
FG209D1	2.8
FG210D1	3.2
FG211D1	4.6
FG212D1	5.7
FG213D1	7.4
FG214D1	8.1
FG215D1	9.0
FG216D1	10
FG217D1	12
FG218D1	15

Square flanged units (Steel series)
Set screw type

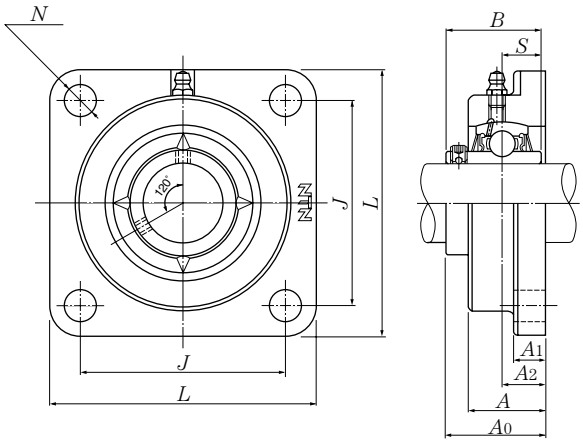

Shaft dia. mm	Unit number [1]	Nominal dimensions mm									Bolt size mm	Bearing number
		L	J	A_2	A_1	A	N	A_0	B	S		
25	**UCFG305D1**	110	80	16	13	29	16	39	38	15	M14	UC305D1
30	**UCFG306D1**	125	95	18	15	32	16	44	43	17	M14	UC306D1
35	**UCFG307D1**	135	100	20	16	36	19	49	48	19	M16	UC307D1
40	**UCFG308D1**	150	112	23	17	40	19	56	52	19	M16	UC308D1
45	**UCFG309D1**	160	125	25	18	44	19	60	57	22	M16	UC309D1
50	**UCFG310D1**	175	132	28	19	48	23	67	61	22	M20	UC310D1
55	**UCFG311D1**	185	140	30	20	52	23	71	66	25	M20	UC311D1
60	**UCFG312D1**	195	150	33	22	56	23	78	71	26	M20	UC312D1
65	**UCFG313D1**	208	166	33	22	58	23	78	75	30	M20	UC313D1
70	**UCFG314D1**	226	178	36	25	61	25	81	78	33	M22	UC314D1
75	**UCFG315D1**	236	184	39	25	66	25	89	82	32	M22	UC315D1
80	**UCFG316D1**	250	196	38	27	68	31	90	86	34	M27	UC316D1
85	**UCFG317D1**	260	204	44	27	74	31	100	96	40	M27	UC317D1
90	**UCFG318D1**	280	216	44	30	76	35	100	96	40	M30	UC318D1
95	**UCFG319D1**	290	228	59	30	94	35	121	103	41	M30	UC319D1
100	**UCFG320D1**	310	242	59	32	94	38	125	108	42	M33	UC320D1
105	**UCFG321D1**	310	242	59	32	94	38	127	112	44	M33	UC321D1
110	**UCFG322D1**	340	266	60	35	96	41	131	117	46	M36	UC322D1
120	**UCFG324D1**	370	290	65	40	110	41	140	126	51	M36	UC324D1
130	**UCFG326D1**	410	320	65	45	115	41	146	135	54	M36	UC326D1
140	**UCFG328D1**	450	350	75	55	125	41	161	145	59	M36	UC328D1

Remarks: 1) These numbers indicate relubricatable type. If maintenance free type is needed, please order without suffix "D1".
Note: Please refer to page 36 for size of grease fitting.

Housing [1)] number	Mass of unit kg
FG305D1	1.6
FG306D1	2.0
FG307D1	2.8
FG308D1	3.6
FG309D1	5.0
FG310D1	6.9
FG311D1	8.8
FG312D1	11
FG313D1	12
FG314D1	14
FG315D1	18
FG316D1	21
FG317D1	23
FG318D1	26
FG319D1	33
FG320D1	40
FG321D1	41
FG322D1	52
FG324D1	64
FG326D1	76
FG328D1	98

Square flanged units cast housing w/ spigot joint
Set screw type

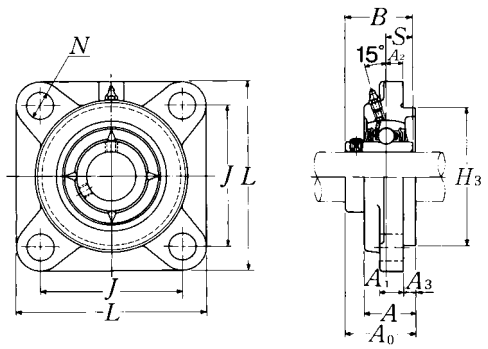

Shaft dia. mm / inch	Unit number [1]	Nominal dimensions L	J	A2	N	A3	A1 (mm)	A (inch)	H3	A0	B	S	Bolt size mm / inch
25	UCFS305D1	110	80	9	16	7	13	29	80	39	38	15	M14
13/16	UCFS305-013D1												
7/8	UCFS305-014D1	4 11/32	3 5/32	23/64	5/8	9/32	1/2	1 9/64	3.1496	1 17/32	1.4961	0.591	1/2
15/16	UCFS305-015D1												
1	UCFS305-100D1												
30	UCFS306D1	125	95	10	16	8	15	32	90	44	43	17	M14
1 1/16	UCFS306-101D1												
1 1/8	UCFS306-102D1	4 29/32	3 47/64	25/64	5/8	5/16	19/32	1 17/64	3.5433	1 47/64	1.6929	0.669	1/2
1 3/16	UCFS306-103D1												
35	UCFS307D1	135	100	11	19	9	16	36	100	49	48	19	M16
1 1/4	UCFS307-104D1												
1 5/16	UCFS307-105D1	5 5/16	3 15/16	7/16	3/4	23/64	5/8	1 13/32	3.9370	1 59/64	1.8898	0.748	5/8
1 3/8	UCFS307-106D1												
1 7/16	UCFS307-107D1												
40	UCFS308D1	150	112	13	19	10	17	40	115	56	52	19	M16
1 1/2	UCFS308-108D1	5 29/32	4 13/32	33/64	3/4	25/64	21/32	1 9/16	4.5276	2 13/64	2.0472	0.748	5/8
1 9/16	UCFS308-109D1												
45	UCFS309D1	160	125	14	19	11	18	44	125	60	57	22	M16
1 5/8	UCFS309-110D1												
1 11/16	UCFS309-111D1	6 5/16	4 59/64	35/64	3/4	7/16	23/32	1 47/64	4.9213	2 23/64	2.2441	0.866	5/8
1 3/4	UCFS309-112D1												
50	UCFS310D1	175	132	16	23	12	19	48	140	67	61	22	M20
1 13/16	UCFS310-113D1												
1 7/8	UCFS310-114D1	6 7/8	5 13/64	5/8	29/32	15/32	3/4	1 57/64	5.5118	2 41/64	2.4016	0.866	3/4
1 15/16	UCFS310-115D1												
55	UCFS311D1	185	140	17	23	13	20	52	150	71	66	25	M20
2	UCFS311-200D1												
2 1/16	UCFS311-201D1	7 9/32	5 33/64	43/64	29/32	33/64	25/32	2 3/64	5.9055	2 51/64	2.5984	0.984	3/4
2 1/8	UCFS311-202D1												
2 3/16	UCFS311-203D1												

Remarks: 1) These numbers indicate relubricatable type. If maintenance free type is needed, please order without suffix "D1".
Note: Please refer to page 36 for size of grease fitting.

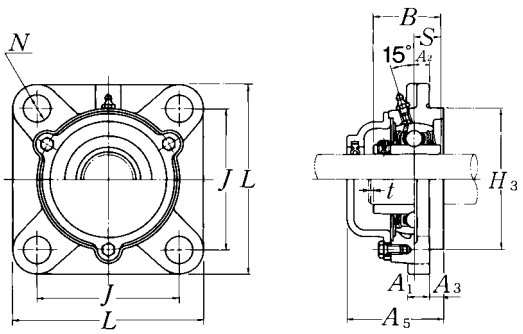

Cast dust cover type
Open end: **C-UCFS···D1**
Closed end: **CM-UCFS···D1**

Bearing number	Housing [1] number	Unit number [1] cast dust cover type	Nominal dimensions		Mass of unit	
			mm	inch	kg	lb
			t max.	A_5	UCFS	C(CM)
UC305D1	FS305D1	**C(CM)-UCFS305D1**	2	56	1.2	1.4
UC305-013D1	FS305D1	**C(CM)-UCFS305-013D1**				
UC305-014D1	FS305D1	**C(CM)-UCFS305-014D1**	5/64	2 13/64	2.7	3.1
UC305-015D1	FS305D1	**C(CM)-UCFS305-015D1**				
UC305-100D1	FS305D1	**C(CM)-UCFS305-100D1**				
UC306D1	FS306D1	**C(CM)-UCFS306D1**	2	60	1.8	2.2
UC306-101D1	FS306D1	**C(CM)-UCFS306-101D1**				
UC306-102D1	FS306D1	**C(CM)-UCFS306-102D1**	5/64	2 23/64	4.0	4.9
UC306-103D1	FS306D1	**C(CM)-UCFS306-103D1**				
UC307D1	FS307D1	**C(CM)-UCFS307D1**	3	67	2.3	2.8
UC307-104D1	FS307D1	**C(CM)-UCFS307-104D1**				
UC307-105D1	FS307D1	**C(CM)-UCFS307-105D1**	1/8	2 41/64	5.1	6.2
UC307-106D1	FS307D1	**C(CM)-UCFS307-106D1**				
UC307-107D1	FS307D1	**C(CM)-UCFS307-107D1**				
UC308D1	FS308D1	**C(CM)-UCFS308D1**	3	76	3.1	3.6
UC308-108D1	FS308D1	**C(CM)-UCFS308-108D1**	1/8	2 63/64	6.8	7.9
UC308-109D1	FS308D1	**C(CM)-UCFS308-109D1**				
UC309D1	FS309D1	**C(CM)-UCFS309D1**	3	80	3.8	4.7
UC309-110D1	FS309D1	**C(CM)-UCFS309-110D1**				
UC309-111D1	FS309D1	**C(CM)-UCFS309-111D1**	1/8	3 5/32	8.4	10
UC309-112D1	FS309D1	**C(CM)-UCFS309-112D1**				
UC310D1	FS310D1	**C(CM)-UCFS310D1**	3	88	5.0	6.2
UC310-113D1	FS310D1	**C(CM)-UCFS310-113D1**				
UC310-114D1	FS310D1	**C(CM)-UCFS310-114D1**	1/8	3 15/32	11	14
UC310-115D1	FS310D1	**C(CM)-UCFS310-115D1**				
UC311D1	FS311D1	**C(CM)-UCFS311D1**	4	93	5.9	7.2
UC311-200D1	FS311D1	**C(CM)-UCFS311-200D1**				
UC311-201D1	FS311D1	**C(CM)-UCFS311-201D1**	5/32	3 21/32	13	16
UC311-202D1	FS311D1	**C(CM)-UCFS311-202D1**				
UC311-203D1	FS311D1	**C(CM)-UCFS311-203D1**				

Square flanged units cast housing w/ spigot joint
Set screw type

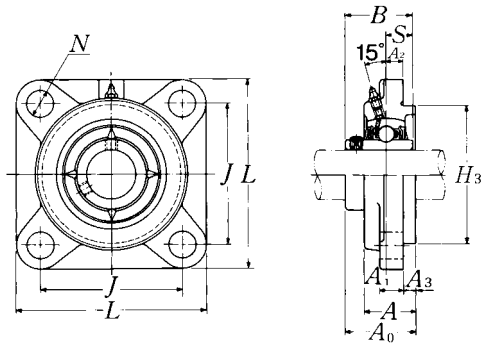

Shaft dia. mm / inch	Unit number [1]	Nominal dimensions L	J	A2	N	A3	A1 (mm)	A (inch)	H3	A0	B	S	Bolt size mm / inch
60	UCFS312D1	195	150	19	23	14	22	56	160	78	71	26	M20
2 1/4	UCFS312-204D1												
2 5/16	UCFS312-205D1	7 11/16	5 29/32	3/4	29/32	35/64	7/8	2 13/64	6.2992	3 5/64	2.7953	1.024	3/4
2 3/8	UCFS312-206D1												
2 7/16	UCFS312-207D1												
65	UCFS313D1	208	166	15	23	18	22	58	175	78	75	30	M20
2 1/2	UCFS313-208D1	8 3/16	6 17/32	19/32	29/32	45/64	7/8	2 9/32	6.8898	3 5/64	2.9528	1.181	3/4
2 9/16	UCFS313-209D1												
70	UCFS314D1	226	178	18	25	18	25	61	185	81	78	33	M22
2 5/8	UCFS314-210D1												
2 11/16	UCFS314-211D1	8 29/32	7 1/64	45/64	63/64	45/64	31/32	2 13/32	7.2835	3 3/16	3.0709	1.299	7/8
2 3/4	UCFS314-212D1												
75	UCFS315D1	236	184	21	25	18	25	66	200	89	82	32	M22
2 13/16	UCFS315-213D1												
2 7/8	UCFS315-214D1	9 9/32	7 1/4	53/64	63/64	45/64	31/32	2 19/32	7.8740	3 1/2	3.2283	1.260	7/8
2 15/16	UCFS315-215D1												
3	UCFS315-300D1												
80	UCFS316D1	250	196	18	31	20	27	68	210	90	86	34	M27
3 1/16	UCFS316-301D1												
3 1/8	UCFS316-302D1	9 27/32	7 23/32	45/64	1 7/32	25/32	1 1/16	2 43/64	8.2677	3 35/64	3.3858	1.339	1
3 3/16	UCFS316-303D1												
85	UCFS317D1	260	204	24	31	20	27	74	220	100	96	40	M27
3 1/4	UCFS317-304D1												
3 5/16	UCFS317-305D1	10 1/4	8 1/32	15/16	1 7/32	25/32	1 1/16	2 29/32	8.6614	3 15/16	3.7795	1.575	1
3 7/16	UCFS317-307D1												
90	UCFS318D1	280	216	24	35	20	30	76	240	100	96	40	M30
3 7/16	UCFS318-307D1	11 1/32	8 1/2	15/16	1 3/8	25/32	1 3/16	2 63/64	9.4488	3 15/16	3.7795	1.575	1 1/8
3 1/2	UCFS318-308D1												

Remarks: 1) These numbers indicate relubricatable type. If maintenance free type is needed, please order without suffix "D1".
Note: Please refer to page 36 for size of grease fitting.

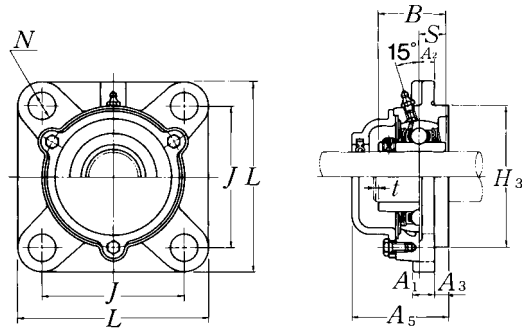

Cast dust cover type
Open end: **C-UCFS···D1**
Closed end: **CM-UCFS···D1**

Bearing number	Housing [1] number	Unit number [1] cast dust cover type	Nominal dimensions		Mass of unit	
			mm	inch	kg	lb
			t max.	A_5	UCFS	C(CM)
UC312D1	FS312D1	**C(CM)-UCFS312D1**	4	100	7.0	8.4
UC312-204D1	FS312D1	**C(CM)-UCFS312-204D1**	5/32	3 15/16	15	19
UC312-205D1	FS312D1	**C(CM)-UCFS312-205D1**				
UC312-206D1	FS312D1	**C(CM)-UCFS312-206D1**				
UC312-207D1	FS312D1	**C(CM)-UCFS312-207D1**				
UC313D1	FS313D1	**C(CM)-UCFS313D1**	4	103	8.6	10
UC313-208D1	FS313D1	**C(CM)-UCFS313-208D1**	5/32	4 1/16	19	22
UC313-209D1	FS313D1	**C(CM)-UCFS313-209D1**				
UC314D1	FS314D1	**C(CM)-UCFS314D1**	4	106	10	12
UC314-210D1	FS314D1	**C(CM)-UCFS314-210D1**	5/32	4 11/64	22	26
UC314-211D1	FS314D1	**C(CM)-UCFS314-211D1**				
UC314-212D1	FS314D1	**C(CM)-UCFS314-212D1**				
UC315D1	FS315D1	**C(CM)-UCFS315D1**	4	114	12	14
UC315-213D1	FS315D1	**C(CM)-UCFS315-213D1**	5/32	4 31/64	26	31
UC315-214D1	FS315D1	**C(CM)-UCFS315-214D1**				
UC315-215D1	FS315D1	**C(CM)-UCFS315-215D1**				
UC315-300D1	FS315D1	**C(CM)-UCFS315-300D1**				
UC316D1	FS316D1	**C(CM)-UCFS316D1**	4	116	14	17
UC316-301D1	FS316D1	**C(CM)-UCFS316-301D1**	5/32	4 9/16	31	37
UC316-302D1	FS316D1	**C(CM)-UCFS316-302D1**				
UC316-303D1	FS316D1	**C(CM)-UCFS316-303D1**				
UC317D1	FS317D1	**C(CM)-UCFS317D1**	5	129	17	20
UC317-304D1	FS317D1	**C(CM)-UCFS317-304D1**	13/64	5 5/64	37	44
UC317-305D1	FS317D1	**C(CM)-UCFS317-305D1**				
UC317-307D1	FS317D1	**C(CM)-UCFS317-307D1**				
UC318D1	FS318D1	**C(CM)-UCFS318D1**	5	129	20	24
UC318-307D1	FS318D1	**C(CM)-UCFS318-307D1**	13/64	5 5/64	44	53
UC318-308D1	FS318D1	**C(CM)-UCFS318-308D1**				

Square flanged units cast housing w/ spigot joint
Set screw type

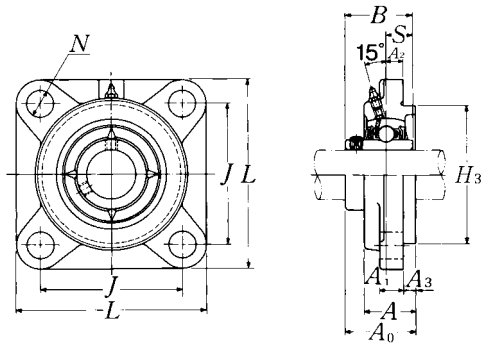

Shaft dia. mm / inch	Unit number [1]	Nominal dimensions											Bolt size mm / inch
							mm	inch					
		L	J	A_2	N	A_3	A_1	A	H_3	A_0	B	S	
95	UCFS319D1	290	228	39	35	20	30	94	250	121	103	41	M30
3 5/8	UCFS319-310D1												
3 11/16	UCFS319-311D1	11 13/32	8 31/32	1 17/32	1 3/8	25/32	1 3/16	3 45/64	9.8425	4 49/64	4.0551	1.614	1 1/8
3 3/4	UCFS319-312D1												
100	UCFS320D1	310	242	39	38	20	32	94	260	125	108	42	M33
3 13/16	UCFS320-313D1												
3 7/8	UCFS320-314D1	12 7/32	9 17/32	1 17/32	1 1/2	25/32	1 1/4	3 45/64	10.2362	4 59/64	4.2520	1.654	1 1/4
3 15/16	UCFS320-315D1												
4	UCFS320-400D1												
105	UCFS321D1	310	242	39	38	20	32	94	260	127	112	44	M33
110	UCFS322D1	340	266	35	41	25	35	96	300	131	117	46	M36
120	UCFS324D1	370	290	35	41	30	40	110	330	140	126	51	M36
130	UCFS326D1	410	320	35	41	30	45	115	360	146	135	54	M36
140	UCFS328D1	450	350	45	41	30	55	125	400	161	145	59	M36

Remarks: 1) These numbers indicate relubricatable type. If maintenance free type is needed, please order without suffix "D1".
Note: Please refer to page 36 for size of grease fitting.

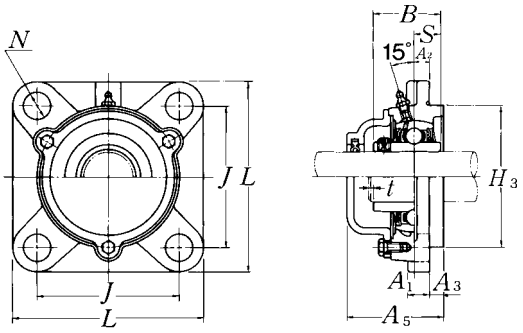

Cast dust cover type
Open end: **C-UCFS···D1**
Closed end: **CM-UCFS···D1**

Bearing number	Housing [1] number	Unit number [1] cast dust cover type	Nominal dimensions		Mass of unit	
			mm	inch	kg	lb
			t max.	A_5	UCFS	C(CM)
UC319D1	FS319D1	**C(CM)-UCFS319D1**	5	149	24	28
UC319-310D1	FS319D1	**C(CM)-UCFS319-310D1**				
UC319-311D1	FS319D1	**C(CM)-UCFS319-311D1**	13/64	5 55/64	53	62
UC319-312D1	FS319D1	**C(CM)-UCFS319-312D1**				
UC320D1	FS320D1	**C(CM)-UCFS320D1**	5	154	29	34
UC320-313D1	FS320D1	**C(CM)-UCFS320-313D1**				
UC320-314D1	FS320D1	**C(CM)-UCFS320-314D1**	13/64	6 1/16	64	75
UC320-315D1	FS320D1	**C(CM)-UCFS320-315D1**				
UC320-400D1	FS320D1	**C(CM)-UCFS320-400D1**				
UC321D1	FS321D1	**C(CM)-UCFS321D1**	5	156	28	33
UC322D1	FS322D1	**C(CM)-UCFS322D1**	5	160	38	45
UC324D1	FS324D1	**C(CM)-UCFS324D1**	5	172	52	59
UC326D1	FS326D1	**C(CM)-UCFS326D1**	6	178	69	77
UC328D1	FS328D1	**C(CM)-UCFS328D1**	6	192	98	109

Square flanged units w/ spigot joint (Steel series)
Set screw type

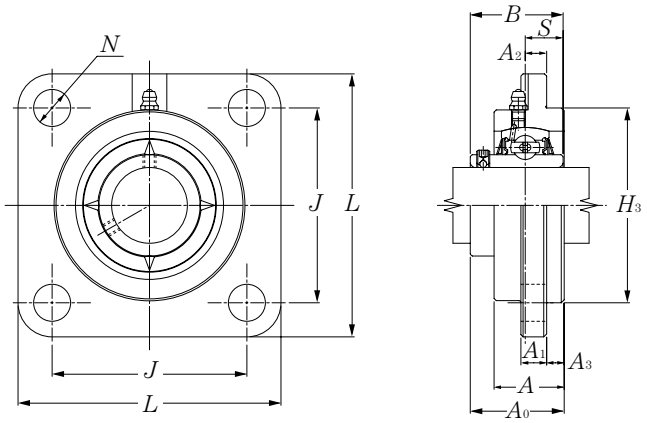

Shaft dia. mm	Unit number [1]	Nominal dimensions mm											Bolt size mm	Bearing number
		L	J	A_2	N	A_3	A_1	A	H_3	A_0	B	S		
25	**UCFSG305D1**	110	80	9	16	7	13	29	80	39	38	15	M14	UC305D1
30	**UCFSG306D1**	125	95	10	16	8	15	32	90	44	43	17	M14	UC306D1
35	**UCFSG307D1**	135	100	11	19	9	16	36	100	49	48	19	M16	UC307D1
40	**UCFSG308D1**	150	112	13	19	10	17	40	115	56	52	19	M16	UC308D1
45	**UCFSG309D1**	160	125	14	19	11	18	44	125	60	57	22	M16	UC309D1
50	**UCFSG310D1**	175	132	16	23	12	19	48	140	67	61	22	M20	UC310D1
55	**UCFSG311D1**	185	140	17	23	13	20	52	150	71	66	25	M20	UC311D1
60	**UCFSG312D1**	195	150	19	23	14	22	56	160	78	71	26	M20	UC312D1
65	**UCFSG313D1**	208	166	15	23	18	22	58	175	78	75	30	M20	UC313D1
70	**UCFSG314D1**	226	178	18	25	18	25	61	185	81	78	33	M22	UC314D1
75	**UCFSG315D1**	236	184	21	25	18	25	66	200	89	82	32	M22	UC315D1
80	**UCFSG316D1**	250	196	18	31	20	27	68	210	90	86	34	M27	UC316D1
85	**UCFSG317D1**	260	204	24	31	20	27	74	220	100	96	40	M27	UC317D1
90	**UCFSG318D1**	280	216	24	35	20	30	76	240	100	96	40	M30	UC318D1
95	**UCFSG319D1**	290	228	39	35	20	30	94	250	121	103	41	M30	UC319D1
100	**UCFSG320D1**	310	242	39	38	20	32	94	260	125	108	42	M33	UC320D1
105	**UCFSG321D1**	310	242	39	38	20	32	94	260	127	112	44	M33	UC321D1
110	**UCFSG322D1**	340	266	35	41	25	35	96	300	131	117	46	M36	UC322D1
120	**UCFSG324D1**	370	290	35	41	30	40	110	330	140	126	51	M36	UC324D1
130	**UCFSG326D1**	410	320	35	41	30	45	115	360	146	135	54	M36	UC326D1
140	**UCFSG328D1**	450	350	45	41	30	55	125	400	161	145	59	M36	UC328D1

Remarks: 1) These numbers indicate relubricatable type. If maintenance free type is needed, please order without suffix "D1".
Note: Please refer to page 36 for size of grease fitting.

Housing [1)] number	Mass of unit kg
FSG305D1	1.9
FSG306D1	2.1
FSG307D1	2.6
FSG308D1	3.6
FSG309D1	4.5
FSG310D1	5.8
FSG311D1	6.9
FSG312D1	8.3
FSG313D1	10
FSG314D1	13
FSG315D1	15
FSG316D1	17
FSG317D1	20
FSG318D1	24
FSG319D1	29
FSG320D1	35
FSG321D1	33
FSG322D1	45
FSG324D1	61
FSG326D1	80
FSG328D1	113

Round flanged units cast housing w/ spigot joint
Set screw type

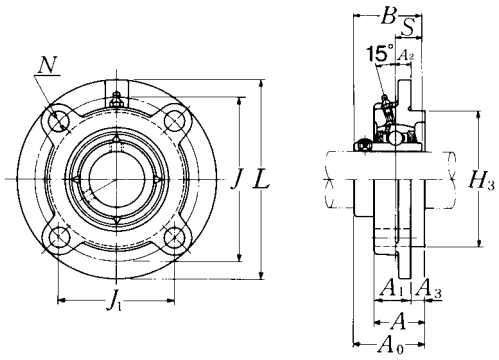

Shaft dia. mm / inch	Unit number [1]	Nominal dimensions													Bolt size mm / inch
							mm		inch						
		L	J	(J_1)	A_2	N	A_3	A_1	A_{1C}	A	H_3	A_0	B	S	
12	UCFC201D1	100	78	55.2	10	12	5	20.5	20.5	25.5	62	33.3	31	12.7	M10
1/2	UCFC201-008D1	3 15/16	3 5/64	2 11/64	25/64	15/32	13/64	13/16	13/16	1	2.4409	1 15/16	1.2205	0.500	3/8
15	UCFC202D1	100	78	55.2	10	12	5	20.5	20.5	25.5	62	33.3	31	12.7	M10
9/16	UCFC202-009D1	3 15/16	3 5/64	2 11/64	25/64	15/32	13/64	13/16	13/16	1	2.4409	1 5/16	1.2205	0.500	3/8
5/8	UCFC202-010D1														
17	UCFC203D1	100	78	55.2	10	12	5	20.5	20.5	25.5	62	33.3	31	12.7	M10
11/16	UCFC203-011D1	3 15/16	3 5/64	2 11/64	25/64	15/32	13/64	13/16	13/16	1	2.4409	1 5/16	1.2205	0.500	3/8
20	UCFC204D1	100	78	55.2	10	12	5	20.5	20.5	25.5	62	33.3	31	12.7	M10
3/4	UCFC204-012D1	3 15/16	3 5/64	2 11/64	25/64	15/32	13/64	13/16	13/16	1	2.4409	1 5/16	1.2205	0.500	3/8
25	UCFC205D1	115	90	63.6	10	12	6	21	22	27	70	35.8	34.1	14.3	M10
13/16	UCFC205-013D1														
7/8	UCFC205-014D1	4 17/32	3 35/64	2 1/2	25/64	15/32	15/64	13/16	7/8	1 1/16	2.7559	1 13/32	1.3425	0.563	3/8
15/16	UCFC205-015D1														
1	UCFC205-100D1														
30	UCFC206D1	125	100	70.7	10	12	8	23	24.5	31	80	40.2	38.1	15.9	M10
1 1/16	UCFC206-101D1														
1 1/8	UCFC206-102D1	4 29/32	3 15/16	2 25/32	25/64	15/32	5/16	29/32	31/32	1 7/32	3.1496	1 37/64	1.5000	0.629	3/8
1 3/16	UCFC206-103D1														
1 1/4	UCFC206-104D1														
35	UCFC207D1	135	110	77.8	11	14	8	26	26	34	90	44.4	42.9	17.5	M12
1 1/4	UCFC207-104D1														
1 5/16	UCFC207-105D1	5 5/16	4 21/64	3 1/16	7/16	35/64	5/16	1 1/32	1 1/32	1 11/32	3.5433	1 3/4	1.6890	0.689	7/16
1 3/8	UCFC207-106D1														
1 7/16	UCFC207-107D1														
40	UCFC208D1	145	120	84.9	11	14	10	26	27.5	36	100	51.2	49.2	19	M12
1 1/2	UCFC208-108D1	5 23/32	4 23/32	3 11/32	7/16	35/64	25/64	1 1/32	1 5/64	1 27/64	3.9370	2 1/64	1.9370	0.748	7/16
1 9/16	UCFC208-109D1														
45	UCFC209D1	160	132	93.3	10	16	12	26	28	38	105	52.2	49.2	19	M14
1 5/8	UCFC209-110D1														
1 11/16	UCFC209-111D1	6 5/16	5 13/64	3 43/64	25/64	5/8	15/32	1 1/32	1 7/64	1 1/2	4.1339	2 3/64	1.9370	0.748	1/2
1 3/4	UCFC209-112D1														

Remarks: 1) These numbers indicate relubricatable type. If maintenance free type is needed, please order without suffix "D1".
Note: Please refer to page 36 for size of grease fitting.

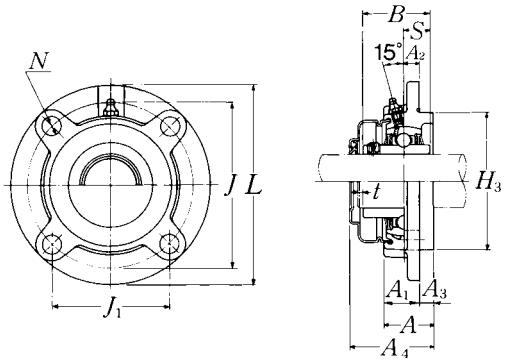

Pressed steel dust cover type
Open end: **S-UCFC···D1**
Closed end: **SM-UCFC···D1**

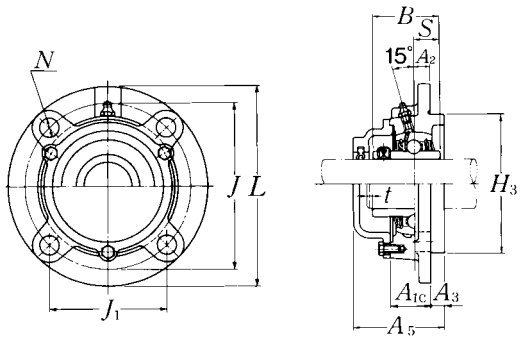

Cast dust cover type
Open end: **C-UCFC···D1**
Closed end: **CM-UCFC···D1**

Bearing number	Housing number [1]	Unit number pressed steel dust cover type [1]	Unit number cast dust cover type [1]	Nominal dimensions mm		inch	Mass of unit kg		lb
				t max.	A_4	A_5	UCFC	S(SM)	C(CM)
UC201D1	FC204D1	S(SM)-UCFC201D1	C(CM)-UCFC201D1	2	40.5	46	0.8	0.8	0.9
UC201-008D1	FC204D1	S(SM)-UCFC201-008D1	S(SM)-UCFC201-008D1	5/64	1 19/32	1 13/16	1.8	1.8	2.0
UC202D1	FC204D1	S(SM)-UCFC202D1	C(CM)-UCFC202D1	2	40.5	46	0.8	0.8	0.9
UC202-009D1	FC204D1	S(SM)-UCFC202-009D1	C(CM)-UCFC202-009D1	5/64	1 19/32	1 13/16	1.8	1.8	2.0
UC202-010D1	FC204D1	S(SM)-UCFC202-010D1	C(CM)-UCFC202-010D1						
UC203D1	FC204D1	S(SM)-UCFC203D1	C(CM)-UCFC203D1	2	40.5	46	0.8	0.8	0.9
UC203-011D1	FC204D1	S(SM)-UCFC203-011D1	C(CM)-UCFC203-011D1	5/64	1 19/32	1 13/16	1.8	1.8	2.0
UC204D1	FC204D1	S(SM)-UCFC204D1	C(CM)-UCFC204D1	2	40.5	46	0.7	0.7	0.9
UC204-012D1	FC204D1	S(SM)-UCFC204-012D1	C(CM)-UCFC204-012D1	5/64	1 19/32	1 13/16	1.5	1.5	2.0
UC205D1	FC205D1	S(SM)-UCFC205D1	C(CM)-UCFC205D1	2	44.5	51	1.0	1.0	1.2
UC205-013D1	FC205D1	S(SM)-UCFC205-013D1	C(CM)-UCFC205-013D1						
UC205-014D1	FC205D1	S(SM)-UCFC205-014D1	C(CM)-UCFC205-014D1	5/64	1 3/4	2	2.2	2.2	2.7
UC205-015D1	FC205D1	S(SM)-UCFC205-015D1	C(CM)-UCFC205-015D1						
UC205-100D1	FC205D1	S(SM)-UCFC205-100D1	C(CM)-UCFC205-100D1						
UC206D1	FC206D1	S(SM)-UCFC206D1	C(CM)-UCFC206D1	2	49	56	1.3	1.4	1.6
UC206-101D1	FC206D1	S(SM)-UCFC206-101D1	C(CM)-UCFC206-101D1						
UC206-102D1	FC206D1	S(SM)-UCFC206-102D1	C(CM)-UCFC206-102D1	5/64	1 59/64	2 13/64	2.9	3.1	3.5
UC206-103D1	FC206D1	S(SM)-UCFC206-103D1	C(CM)-UCFC206-103D1						
UC206-104D1	FC206D1	S(SM)-UCFC206-104D1	C(CM)-UCFC206-104D1						
UC207D1	FC207D1	S(SM)-UCFC207D1	C(CM)-UCFC207D1	3	55	59	1.6	1.7	1.9
UC207-104D1	FC207D1	S(SM)-UCFC207-104D1	C(CM)-UCFC207-104D1						
UC207-105D1	FC207D1	S(SM)-UCFC207-105D1	C(CM)-UCFC207-105D1	1/8	2 11/64	2 21/64	3.5	3.7	4.2
UC207-106D1	FC207D1	S(SM)-UCFC207-106D1	C(CM)-UCFC207-106D1						
UC207-107D1	FC207D1	S(SM)-UCFC207-107D1	C(CM)-UCFC207-107D1						
UC208D1	FC208D1	S(SM)-UCFC208D1	C(CM)-UCFC208D1	3	62	66	2.0	2.1	2.4
UC208-108D1	FC208D1	S(SM)-UCFC208-108D1	C(CM)-UCFC208-108D1	1/8	2 7/16	2 19/32	4.4	4.6	5.3
UC208-109D1	FC208D1	S(SM)-UCFC208-109D1	C(CM)-UCFC208-109D1						
UC209D1	FC209D1	S(SM)-UCFC209D1	C(CM)-UCFC209D1	3	63	70	2.7	2.7	3.2
UC209-110D1	FC209D1	S(SM)-UCFC209-110D1	C(CM)-UCFC209-110D1						
UC209-111D1	FC209D1	S(SM)-UCFC209-111D1	C(CM)-UCFC209-111D1	1/8	2 31/64	2 3/4	6.0	6.0	7.1
UC209-112D1	FC209D1	S(SM)-UCFC209-112D1	C(CM)-UCFC209-112D1						

Round flanged units cast housing w/ spigot joint
Set screw type

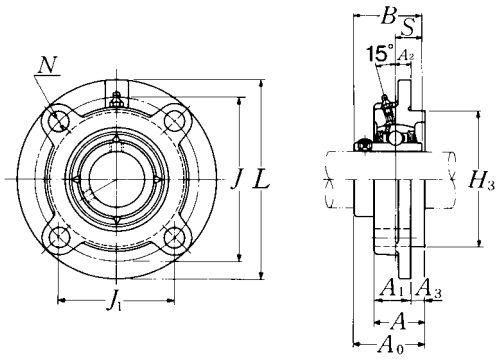

Shaft dia. mm / inch	Unit number [1]	Nominal dimensions mm / inch L	J	(J1)	A2	N	A3	A1	A1C	A	H3	A0	B	S	Bolt size mm / inch
50	UCFC210D1	165	138	97.6	10	16	12	28	29	40	110	54.6	51.6	19	M14
1 13/16	UCFC210-113D1														
1 7/8	UCFC210-114D1	6 1/2	5 7/16	3 27/32	25/64	5/8	15/32	1 3/32	1 5/32	1 37/64	4.3307	2 5/32	2.0315	0.748	1/2
1 15/16	UCFC210-115D1														
2	UCFC210-200D1														
55	UCFC211D1	185	150	106.1	13	19	12	31	32.5	43	125	58.4	55.6	22.2	M16
2	UCFC211-200D1														
2 1/16	UCFC211-201D1	7 9/32	5 29/32	4 11/64	33/64	3/4	15/32	1 7/32	1 9/32	1 11/16	4.9213	2 19/64	2.1890	0.874	5/8
2 1/8	UCFC211-202D1														
2 3/16	UCFC211-203D1														
60	UCFC212D1	195	160	113.1	17	19	12	36	38	48	135	68.7	65.1	25.4	M16
2 1/4	UCFC212-204D1														
2 5/16	UCFC212-205D1	7 11/16	6 19/64	4 29/64	43/64	3/4	15/32	1 13/32	1 1/2	1 57/64	5.3150	2 45/64	2.5630	1.000	5/8
2 3/8	UCFC212-206D1														
2 7/16	UCFC212-207D1														
65	UCFC213D1	205	170	120.2	16	19	14	36	38	50	145	69.7	65.1	25.4	M16
2 1/2	UCFC213-208D1	8 1/16	6 11/16	4 47/64	5/8	3/4	35/64	1 13/32	1 1/2	1 31/32	5.7087	2 3/4	2.5630	1.000	5/8
2 9/16	UCFC213-209D1														
70	UCFC214D1	215	177	125.2	17	19	14	40	39.5	54	150	75.4	74.6	30.2	M16
2 5/8	UCFC214-210D1														
2 11/16	UCFC214-211D1	8 15/32	6 31/32	4 59/64	43/64	3/4	35/64	1 37/64	1 9/16	2 1/8	5.9055	2 31/32	2.9370	1.189	5/8
2 3/4	UCFC214-212D1														
75	UCFC215D1	220	184	130.1	18	19	16	40	43	56	160	78.5	77.8	33.3	M16
2 13/16	UCFC215-213D1														
2 7/8	UCFC215-214D1	8 21/32	7 1/4	5 1/8	45/64	3/4	5/8	1 37/64	1 11/16	2 13/64	6.2992	3 3/32	3.0630	1.311	5/8
2 15/16	UCFC215-215D1														
3	UCFC215-300D1														
80	UCFC216D1	240	200	141.4	18	23	16	42	43	58	170	83.3	82.6	33.3	M20
3 1/16	UCFC216-301D1														
3 1/8	UCFC216-302D1	9 7/16	7 7/8	5 9/16	45/64	29/32	5/8	1 21/32	1 11/16	2 9/32	6.6929	2 9/32	3.2520	1.311	3/4
3 3/16	UCFC216-303D1														

Remarks: 1) These numbers indicate relubricatable type. If maintenance free type is needed, please order without suffix "D1".
Note: Please refer to page 36 for size of grease fitting.

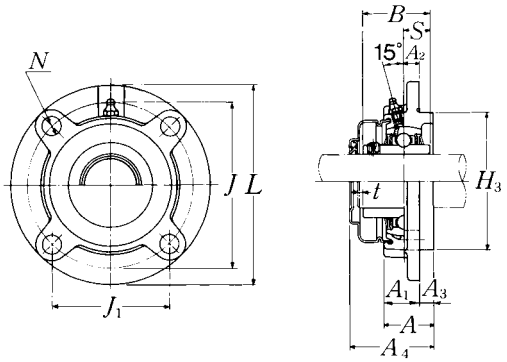

Pressed steel dust cover type
Open end: **S-UCFC···D1**
Closed end: **SM-UCFC···D1**

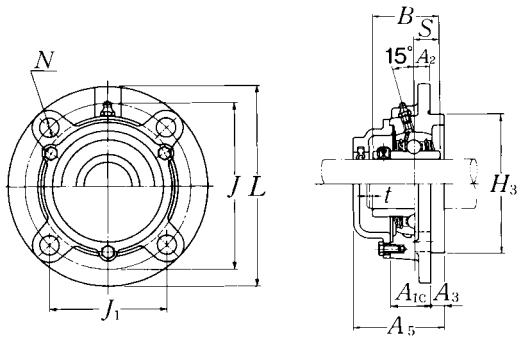

Cast dust cover type
Open end: **C-UCFC···D1**
Closed end: **CM-UCFC···D1**

Bearing number	Housing number [1]	Unit number pressed steel dust cover type [1]	Unit number cast dust cover type [1]	Nominal dimensions mm t max.	A_4	A_5 inch	Mass of unit kg UCFC	S(SM)	C(CM) lb
UC210D1	FC210D1	S(SM)-UCFC210D1	C(CM)-UCFC210D1	3	65.5	72	3.0	3.1	3.6
UC210-113D1	FC210D1	S(SM)-UCFC210-113D1	C(CM)-UCFC210-113D1						
UC210-114D1	FC210D1	S(SM)-UCFC210-114D1	C(CM)-UCFC210-114D1	1/8	2 37/64	2 53/64	6.6	6.8	7.9
UC210-115D1	FC210D1	S(SM)-UCFC210-115D1	C(CM)-UCFC210-115D1						
UC210-200D1	FC210D1	S(SM)-UCFC210-200D1	C(CM)-UCFC210-200D1						
UC211D1	FC211D1	S(SM)-UCFC211D1	C(CM)-UCFC211D1	4	71	75	4.1	4.2	4.8
UC211-200D1	FC211D1	S(SM)-UCFC211-200D1	C(CM)-UCFC211-200D1						
UC211-201D1	FC211D1	S(SM)-UCFC211-201D1	C(CM)-UCFC211-201D1	5/32	2 51/64	2 61/64	9.0	9.3	11
UC211-202D1	FC211D1	S(SM)-UCFC211-202D1	C(CM)-UCFC211-202D1						
UC211-203D1	FC211D1	S(SM)-UCFC211-203D1	C(CM)-UCFC211-203D1						
UC212D1	FC212D1	S(SM)-UCFC212D1	C(CM)-UCFC212D1	4	80	86	4.9	5.1	5.9
UC212-204D1	FC212D1	S(SM)-UCFC212-204D1	C(CM)-UCFC212-204D1						
UC212-205D1	FC212D1	S(SM)-UCFC212-205D1	C(CM)-UCFC212-205D1	5/32	3 5/32	3 25/64	11	11	13
UC212-206D1	FC212D1	S(SM)-UCFC212-206D1	C(CM)-UCFC212-206D1						
UC212-207D1	FC212D1	S(SM)-UCFC212-207D1	C(CM)-UCFC212-207D1						
UC213D1	FC213D1	S(SM)-UCFC213D1	C(CM)-UCFC213D1	4	83.5	89.5	5.8	6.0	6.8
UC213-208D1	FC213D1	S(SM)-UCFC213-208D1	C(CM)-UCFC213-208D1	5/32	3 9/32	3 17/32	13	14	17
UC213-209D1	FC213D1	S(SM)-UCFC213-209D1	C(CM)-UCFC213-209D1						
UC214D1	FC214D1	—	C(CM)-UCFC214D1	4	—	98	7.0	—	8.0
UC214-210D1	FC214D1		C(CM)-UCFC214-210D1						
UC214-211D1	FC214D1	—	C(CM)-UCFC214-211D1	5/32	—	3 55/64	15	—	18
UC214-212D1	FC214D1		C(CM)-UCFC214-212D1						
UC215D1	FC215D1	—	C(CM)-UCFC215D1	4	—	102	7.4	—	8.8
UC215-213D1	FC215D1		C(CM)-UCFC215-213D1						
UC215-214D1	FC215D1	—	C(CM)-UCFC215-214D1	5/32	—	4 1/64	16	—	19
UC215-215D1	FC215D1		C(CM)-UCFC215-215D1						
UC215-300D1	FC215D1		C(CM)-UCFC215-300D1						
UC216D1	FC216D1	—	C(CM)-UCFC216D1	4	—	106	9.1	—	10
UC216-301D1	FC216D1		C(CM)-UCFC216-301D1						
UC216-302D1	FC216D1	—	C(CM)-UCFC216-302D1	5/32	—	4 11/64	20	—	22
UC216-303D1	FC216D1		C(CM)-UCFC216-303D1						

Round flanged units cast housing w/ spigot joint
Set screw type

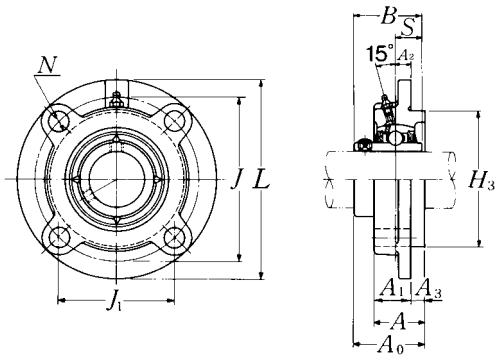

Shaft dia. mm / inch	Unit number [1]	Nominal dimensions													Bolt size mm / inch
							mm		inch						
		L	J	(J_1)	A_2	N	A_3	A_1	A_{1C}	A	H_3	A_0	B	S	
85	**UCFC217D1**	250	208	147.1	18	23	18	45	45.5	63	180	87.6	85.7	34.1	M20
3 1/4	**UCFC217-304D1**														
3 5/16	**UCFC217-305D1**	9 27/32	8 3/16	5 51/64	45/64	29/32	45/64	1 25/32	1 51/64	2 31/64	7.0866	3 29/64	3.3740	1.343	3/4
3 7/16	**UCFC217-307D1**														
90	**UCFC218D1**	265	220	155.6	22	23	18	50	50	68	190	96.3	96	39.7	M20
3 1/2	**UCFC218-308D1**	10 7/16	8 21/32	6 1/8	55/64	29/32	45/64	1 31/32	1 31/32	2 43/64	7.4803	3 51/64	3.7795	1.563	3/4

Remarks: 1) These numbers indicate relubricatable type. If maintenance free type is needed, please order without suffix "D1".
Note: Please refer to page 36 for size of grease fitting.

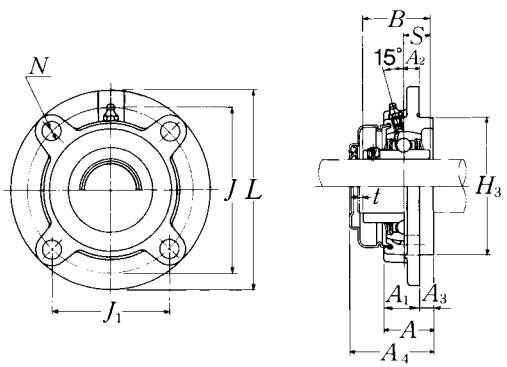

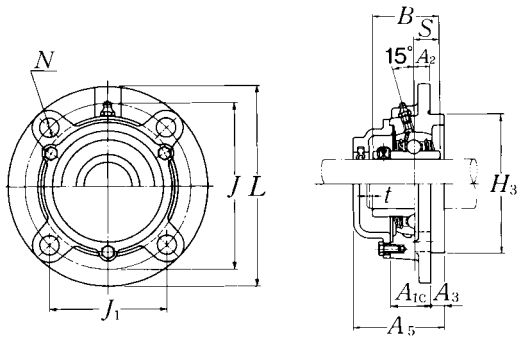

Pressed steel dust cover type
Open end: **S-UCFC···D1**
Closed end: **SM-UCFC···D1**

Cast dust cover type
Open end: **C-UCFC···D1**
Closed end: **CM-UCFC···D1**

Bearing number	Housing [1] number	Unit number pressed [1] steel dust cover type	Unit number [1] cast dust cover type	Nominal dimensions			Mass of unit		
				mm		inch	kg		lb
				t max.	A_4	A_5	UCFC	S(SM)	C(CM)
UC217D1	FC217D1	—	**C(CM)-UCFC217D1**	5	—	114	11	—	12
UC217-304D1	FC217D1	—	**C(CM)-UCFC217-304D1**	$^{13}/_{64}$	—	$4^{31}/_{64}$	24	—	26
UC217-305D1	FC217D1		**C(CM)-UCFC217-305D1**						
UC217-307D1	FC217D1		**C(CM)-UCFC217-307D1**						
UC218D1	FC218D1	—	**C(CM)-UCFC218D1**	5	—	122	13	—	15
UC218-308D1	FC218D1	—	**C(CM)-UCFC218-308D1**	$^{13}/_{64}$	—	$4^{51}/_{64}$	29	—	33

Round flanged units cast housing w/ spigot joint
Set screw type

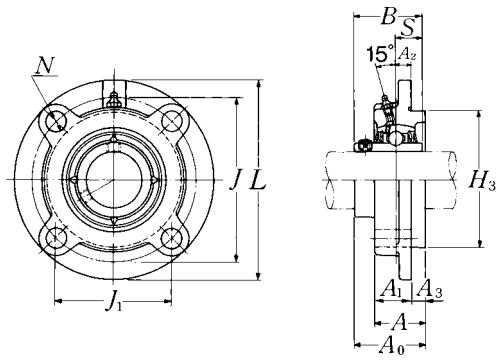

Shaft dia. mm / inch	Unit number [1]	Nominal dimensions mm / inch L	J	(J1)	A2	N	A3	A1	A	H3	A0	B	S	Bolt size mm / inch
25	UCFCX05D1	111	92	65.1	10	9.5	6	24	30	76	38.2	38.1	15.9	M 8
13/16	UCFCX05-013D1													
7/8	UCFCX05-014D1	4 3/8	3 5/8	2 9/16	25/64	3/8	1/4	15/16	1 3/16	2.9921	1 1/2	1.5000	0.626	5/16
15/16	UCFCX05-015D1													
1	UCFCX05-100D1													
30	UCFCX06D1	127	105	74.2	8	12	9.5	22.5	32	85	42.9	42.9	17.5	M10
1 1/16	UCFCX06-101D1													
1 1/8	UCFCX06-102D1	5	4 9/64	2 59/64	5/16	15/32	3/8	7/8	1 27/64	3.3465	1 11/16	1.6890	0.689	3/8
1 3/16	UCFCX06-103D1													
1 1/4	UCFCX06-104D1													
35	UCFCX07D1	133	111	78.5	9	12	11	26	37	92	50.2	49.2	19	M10
1 5/16	UCFCX07-105D1													
1 3/8	UCFCX07-106D1	5 1/4	4 3/8	3 3/32	23/64	15/32	7/16	1 1/32	1 29/64	3.6220	1 31/32	1.9370	0.748	3/8
1 7/16	UCFCX07-107D1													
40	UCFCX08D1	133	111	78.5	9	12	11	26	37	92	50.2	49.2	19	M10
1 1/2	UCFCX08-108D1	5 1/4	4 3/8	3 3/32	23/64	15/32	7/16	1 1/32	1 29/64	3.6220	1 31/32	1.9370	0.748	3/8
1 9/16	UCFCX08-109D1													
45	UCFCX09D1	155	130	91.9	8	14	12	25	37	108	52.6	51.6	19	M12
1 5/8	UCFCX09-110D1													
1 11/16	UCFCX09-111D1	6 3/32	5 1/8	3 5/8	5/16	35/64	15/32	31/32	1 29/64	4.2520	2 5/64	2.0315	0.748	7/16
1 3/4	UCFCX09-112D1													
1 13/16	UCFCX09-113D1													
50	UCFCX10D1	162	136	96.2	7	14	16	25	41	118	56.4	55.6	22.2	M12
1 7/8	UCFCX10-114D1													
1 15/16	UCFCX10-115D1	6 3/8	5 23/64	3 25/32	9/32	35/64	5/8	31/32	1 39/64	4.6457	2 7/32	2.1890	0.874	7/16
2	UCFCX10-200D1													

Remarks: 1) These numbers indicate relubricatable type. If maintenance free type is needed, please order without suffix "D1".
Note: Please refer to page 36 for size of grease fitting.

Bearing number	Housing [1)] number	Mass of unit kg lb
UCX05D1	FCX05D1	1.2
UCX05-013D1	FCX05D1	2.7
UCX05-014D1	FCX05D1	
UCX05-015D1	FCX05D1	
UCX05-100D1	FCX05D1	
UCX06D1	FCX06D1	1.7
UCX06-101D1	FCX06D1	3.8
UCX06-102D1	FCX06D1	
UCX06-103D1	FCX06D1	
UC207-104D1	FCX06D1	
UCX07D1	FCX07D1	1.9
UCX07-105D1	FCX07D1	4.2
UCX07-106D1	FCX07D1	
UCX07-107D1	FCX07D1	
UCX08D1	FCX08D1	2.0
UCX08-108D1	FCX08D1	4.4
UCX08-109D1	FCX08D1	
UCX09D1	FCX09D1	2.6
UCX09-110D1	FCX09D1	5.7
UCX09-111D1	FCX09D1	
UCX09-112D1	FCX09D1	
UC210-113D1	FCX09D1	
UCX10D1	FCX10D1	3.1
UCX10-114D1	FCX10D1	6.8
UCX10-115D1	FCX10D1	
UC211-200D1	FCX10D1	

Round flanged units cast housing w/ spigot joint
Set screw type

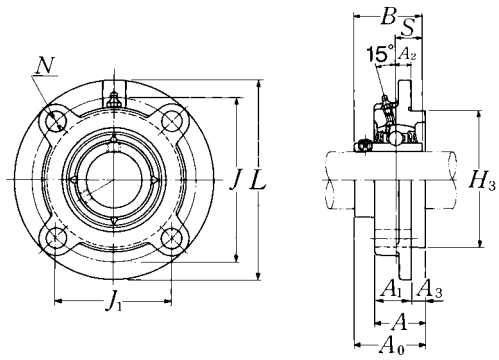

Shaft dia. mm / inch	Unit number [1]	Nominal dimensions L	J	(J1)	A2	N	A3 (mm)	A1 (mm)	A (inch)	H3	A0	B	S	Bolt size mm / inch
55	UCFCX11D1	180	152	107.5	4	16	22	26	48	127	65.7	65.1	25.4	M14
2 1/16	UCFCX11-201D1													
2 1/8	UCFCX11-202D1													
2 3/16	UCFCX11-203D1	7 3/32	5 63/64	4 15/64	5/32	5/8	55/64	1 1/32	1 57/64	5.0000	2 19/32	2.5630	1.000	1/2
2 1/4	UCFCX11-204D1													
2 5/16	UCFCX11-205D1													
60	UCFCX12D1	194	165	116.7	11	16	20	33	53	140	70.7	65.1	25.4	M14
2 3/8	UCFCX12-206D1	7 5/8	6 1/2	4 19/32	7/16	5/8	25/32	1 5/16	2 5/64	5.5118	2 25/32	2.5630	1.000	1/2
2 7/16	UCFCX12-207D1													
65	UCFCX13D1	194	165	116.7	11	16	20	33	53	140	75.4	74.6	30.2	M14
2 1/2	UCFCX13-208D1	7 5/8	6 1/2	4 19/32	7/16	5/8	25/32	1 5/16	2 5/64	5.5118	2 31/32	2.9370	1.189	1/2
2 9/16	UCFCX13-209D1													
70	UCFCX14D1	222	190	134.4	14	19	20	36	56	164	78.5	77.8	33.3	M16
2 5/8	UCFCX14-210D1													
2 11/16	UCFCX14-211D1	8 3/4	7 31/64	5 9/32	35/64	3/4	25/32	1 13/32	2 13/64	6.4567	3 3/32	3.0630	1.311	5/8
2 3/4	UCFCX14-212D1													
75	UCFCX15D1	222	190	134.4	12	19	22	35	57	164	83.3	82.6	33.3	M16
2 13/16	UCFCX15-213D1													
2 7/8	UCFCX15-214D1	8 3/4	7 31/64	5 9/32	15/32	3/4	55/64	1 3/8	2 1/4	6.4567	3 9/32	3.2520	1.311	5/8
2 15/16	UCFCX15-215D1													
3	UCFCX15-300D1													
80	UCFCX16D1	260	219	154.9	10	23	25	36	61	186	86.6	85.7	34.1	M20
3 1/16	UCFCX16-301D1													
3 1/8	UCFCX16-302D1	10 1/4	8 5/8	6 3/32	25/64	29/32	63/64	1 13/32	2 13/32	7.3228	3 13/32	3.3740	1.343	3/4
3 3/16	UCFCX16-303D1													
3 1/4	UCFCX16-304D1													
85	UCFCX17D1	260	219	154.9	10	23	25	36	61	186	91.3	96	39.7	M20
3 5/16	UCFCX17-305D1	10 1/4	8 5/8	6 3/32	25/64	29/32	63/64	1 13/32	2 13/32	7.3228	3 19/32	3.7795	1.563	3/4
3 7/16	UCFCX17-307D1													

Remarks: 1) These numbers indicate relubricatable type. If maintenance free type is needed, please order without suffix "D1".
Note: Please refer to page 36 for size of grease fitting.

Bearing number	Housing [1)] number	Mass of unit kg lb
UCX11D1	FCX11D1	4.2
UCX11-201D1	FCX11D1	
UCX11-202D1	FCX11D1	
UCX11-203D1	FCX11D1	9.3
UC212-204D1	FCX11D1	
UC212-205D1	FCX11D1	
UCX12D1	FCX12D1	5.5
UCX12-206D1	FCX12D1	12
UCX12-207D1	FCX12D1	
UCX13D1	FCX13D1	5.7
UCX13-208D1	FCX13D1	13
UCX13-209D1	FCX13D1	
UCX14D1	FCX14D1	7.3
UCX14-210D1	FCX14D1	
UCX14-211D1	FCX14D1	16
UCX14-212D1	FCX14D1	
UCX15D1	FCX15D1	8.0
UCX15-213D1	FCX15D1	
UCX15-214D1	FCX15D1	18
UCX15-215D1	FCX15D1	
UCX15-300D1	FCX15D1	
UCX16D1	FCX16D1	12
UCX16-301D1	FCX16D1	
UCX16-302D1	FCX16D1	26
UCX16-303D1	FCX16D1	
UC217-304D1	FCX16D1	
UCX17D1	FCX17D1	12
UCX17-305D1	FCX17D1	26
UCX17-307D1	FCX17D1	

Round flanged units cast housing w/ spigot joint
Set screw type

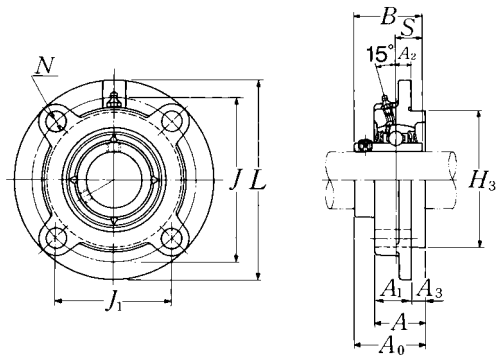

Shaft dia. mm / inch	Unit number [1]	Nominal dimensions mm / inch L	J	(J1)	A2	N	A3	A1	A	H3	A0	B	S	Bolt size mm / inch
90	UCFCX18D1	260	219	154.9	12	23	28	43	71	186	101.1	104	42.9	M20
3 7/16	UCFCX18-307D1	10 1/4	8 5/8	6 3/32	15/32	29/32	1 7/64	1 11/16	2 51/64	7.3228	3 63/64	4.0945	1.689	3/4
3 1/2	UCFCX18-308D1													
100	UCFCX20D1	276	238	168.3	22	23	28	66	94	206	118.3	117.5	49.2	M20
3 13/16	UCFCX20-313D1													
3 7/8	UCFCX20-314D1	10 7/8	9 3/8	6 5/8	55/64	29/32	1 7/64	2 19/32	3 45/64	8.1102	4 21/32	4.6260	1.937	3/4
3 15/16	UCFCX20-315D1													
4	UCFCX20-400D1													

Remarks: 1) These numbers indicate relubricatable type. If maintenance free type is needed, please order without suffix "D1".
Note: Please refer to page 36 for size of grease fitting.

Bearing number	Housing [1)] number	Mass of unit kg	lb
UCX18D1	FCX18D1	12	
UCX18-307D1	FCX18D1	26	
UCX18-308D1	FCX18D1		
UCX20D1	FCX20D1	18	
UCX20-313D1	FCX20D1	40	
UCX20-314D1	FCX20D1		
UCX20-315D1	FCX20D1		
UCX20-400D1	FCX20D1		

Round flanged units w/ spigot joint (Steel series)
Set screw type

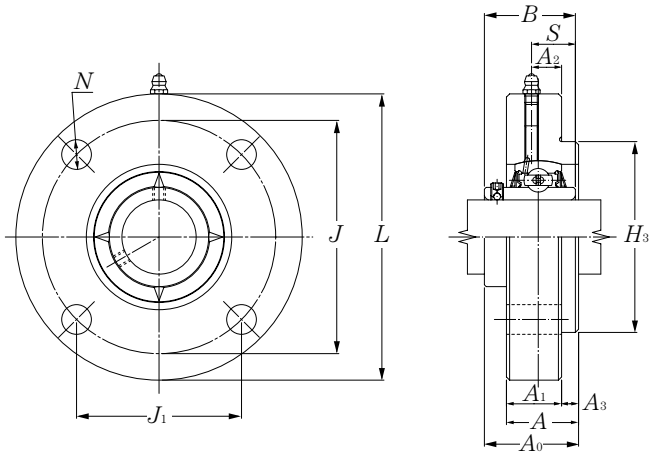

Shaft dia. mm	Unit number [1]	Nominal dimensions mm												Bolt size mm
		L	J	(J_1)	A_2	N	A_3	A_1	A	H_3	A_0	B	S	
12	UCFCG201D1	100	78	55.2	10	12	5	20.5	25.5	62	33.3	31	12.7	M10
15	UCFCG202D1	100	78	55.2	10	12	5	20.5	25.5	62	33.3	31	12.7	M10
17	UCFCG203D1	100	78	55.2	10	12	5	20.5	25.5	62	33.3	31	12.7	M10
20	UCFCG204D1	100	78	55.2	10	12	5	20.5	25.5	62	33.3	31	12.7	M10
25	UCFCG205D1	115	90	63.6	10	12	6	21	27	70	35.8	34.1	14.3	M10
30	UCFCG206D1	125	100	70.7	10	12	8	23	31	80	40.2	38.1	15.9	M10
35	UCFCG207D1	135	110	77.8	11	14	8	26	34	90	44.4	42.9	17.5	M12
40	UCFCG208D1	145	120	84.9	11	14	10	26	36	100	51.2	49.2	19	M12
45	UCFCG209D1	160	132	93.3	10	16	12	26	38	105	52.2	49.2	19	M14
50	UCFCG210D1	165	138	97.6	10	16	12	28	40	110	54.6	51.6	19	M14
55	UCFCG211D1	185	150	106.1	13	19	12	31	43	125	58.4	55.6	22.2	M16
60	UCFCG212D1	195	160	113.1	17	19	12	36	48	135	68.7	65.1	25.4	M16
65	UCFCG213D1	205	170	120.2	16	19	14	36	50	145	69.7	65.1	25.4	M16
70	UCFCG214D1	215	177	125.2	17	19	14	40	54	150	75.4	74.6	30.2	M16
75	UCFCG215D1	220	184	130.1	18	19	16	40	56	160	78.5	77.8	33.3	M16
80	UCFCG216D1	240	200	141.4	18	23	16	42	58	170	83.3	82.6	33.3	M20
85	UCFCG217D1	250	208	147.1	18	23	18	45	63	180	87.6	85.7	34.1	M20
90	UCFCG218D1	265	220	155.6	22	23	18	50	68	190	96.3	96	39.7	M20

Remarks: 1) These numbers indicate relubricatable type. If maintenance free type is needed, please order without suffix "D1".
Note: Please refer to page 36 for size of grease fitting.

Bearing number	Housing [1] number	Mass of unit kg
UC201D1	FCG204D1	1.2
UC202D1	FCG204D1	1.2
UC203D1	FCG204D1	1.1
UC204D1	FCG204D1	1.1
UC205D1	FCG205D1	1.6
UC206D1	FCG206D1	2.0
UC207D1	FCG207D1	2.6
UC208D1	FCG208D1	3.1
UC209D1	FCG209D1	3.8
UC210D1	FCG210D1	4.2
UC211D1	FCG211D1	5.8
UC212D1	FCG212D1	7.4
UC213D1	FCG213D1	8.1
UC214D1	FCG214D1	9.9
UC215D1	FCG215D1	10
UC216D1	FCG216D1	13
UC217D1	FCG217D1	15
UC218D1	FCG218D1	19

Rhombus flanged units cast housing
Set screw type

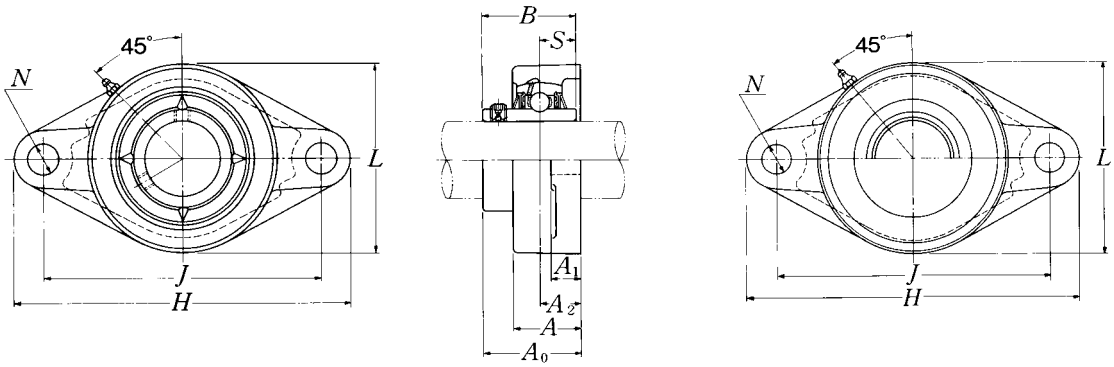

Pressed steel dust cover type
Open end: **S-UCFL···D1**
Closed end: **SM-UCFL···D1**

Shaft dia. mm / inch	Unit number [1]	Nominal dimensions (mm / inch) H	J	A_2	A_1	A	N	L	A_0	B	S	Bolt size mm / inch	Bearing number
12	UCFL201D1	113	90	15	11	25.5	12	60	33.3	31	12.7	M10	UC201D1
1/2	UCFL201-008D1	4 7/16	3 35/64	19/32	7/16	1	15/32	2 3/8	1 5/16	1.2205	0.500	3/8	UC201-008D1
15	UCFL202D1	113	90	15	11	25.5	12	60	33.3	31	12.7	M10	UC202D1
9/16	UCFL202-009D1	4 7/16	3 35/64	19/32	7/16	1	15/32	2 3/8	1 5/16	1.2205	0.500	3/8	UC202-009D1
5/8	UCFL202-010D1												UC202-010D1
17	UCFL203D1	113	90	15	11	25.5	12	60	33.3	31	12.7	M10	UC203D1
11/16	UCFL203-011D1	4 7/16	3 35/64	19/32	7/16	1	15/32	2 3/8	1 5/16	1.2205	0.500	3/8	UC203-011D1
20	UCFL204D1	113	90	15	11	25.5	12	60	33.3	31	12.7	M10	UC204D1
3/4	UCFL204-012D1	4 7/16	3 35/64	19/32	7/16	1	15/32	2 3/8	1 5/16	1.2205	0.500	3/8	UC204-012D1
25	UCFL205D1	130	99	16	13	27	16	68	35.8	34.1	14.3	M14	UC205D1
13/16	UCFL205-013D1												UC205-013D1
7/8	UCFL205-014D1	5 1/8	3 57/64	5/8	1/2	1 1/16	5/8	2 11/16	1 13/32	1.3425	0.563	1/2	UC205-014D1
15/16	UCFL205-015D1												UC205-015D1
1	UCFL205-100D1												UC205-100D1
30	UCFL206D1	148	117	18	13	31	16	80	40.2	38.1	15.9	M14	UC206D1
1 1/16	UCFL206-101D1												UC206-101D1
1 1/8	UCFL206-102D1	5 13/16	4 39/64	45/64	1/2	1 7/32	5/8	3 5/32	1 37/64	1.5000	0.626	1/2	UC206-102D1
1 3/16	UCFL206-103D1												UC206-103D1
1 1/4	UCFL206-104D1												UC206-104D1
35	UCFL207D1	161	130	19	15	34	16	90	44.4	42.9	17.5	M14	UC207D1
1 1/4	UCFL207-104D1												UC207-104D1
1 5/16	UCFL207-105D1	6 11/32	5 1/8	3/4	19/32	1 11/32	5/8	3 17/32	1 3/4	1.6890	0.689	1/2	UC207-105D1
1 3/8	UCFL207-106D1												UC207-106D1
1 7/16	UCFL207-107D1												UC207-107D1
40	UCFL208D1	175	144	21	15	36	16	100	51.2	49.2	19	M14	UC208D1
1 1/2	UCFL208-108D1	6 7/8	5 43/64	53/64	19/32	1 13/32	5/8	3 15/16	2 1/64	1.9370	0.748	1/2	UC208-108D1
1 9/16	UCFL208-109D1												UC208-109D1
45	UCFL209D1	188	148	22	16	38	19	108	52.2	49.2	19	M16	UC209D1
1 5/8	UCFL209-110D1												UC209-110D1
1 11/16	UCFL209-111D1	7 13/32	5 53/64	55/64	5/8	1 1/2	3/4	4 1/4	2 1/16	1.9370	0.748	5/8	UC209-111D1
1 3/4	UCFL209-112D1												UC209-112D1

Remarks: 1) These numbers indicate relubricatable type. If maintenance free type is needed, please order without suffix "D1".
Note: Please refer to page 36 for size of grease fitting.

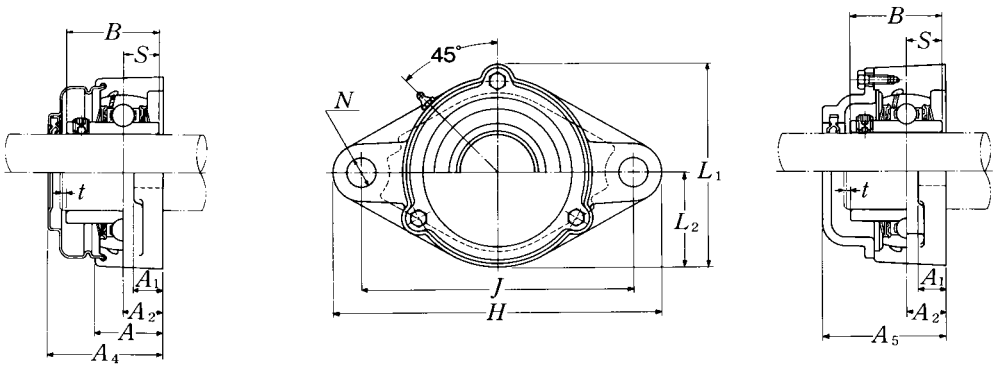

Cast dust cover type
Open end: **C-UCFL···D1**
Closed end: **CM-UCFL···D1**

Housing [1] number	Unit number [1] pressed steel dust cover type	Unit number [1] cast dust cover type	Nominal dimensions					Mass of unit		
			mm			inch		kg		lb
			t max.	A_4	A_5	L_1	L_2	UCFL	S(SM)	C(CM)
FL204D1	S(SM)-UCFL201D1	C(CM)-UCFL201D1	2	40.5	46	67	30	0.5	0.5	0.6
FL204D1	S(SM)-UCFL201-008D1	C(CM)-UCFL201-008D1	5/64	1 19/32	1 13/16	2 5/8	1 3/16	1.1	1.1	1.3
FL204D1	S(SM)-UCFL202D1	C(CM)-UCFL202D1	2	40.5	46	67	30	0.5	0.5	0.6
FL204D1	S(SM)-UCFL202-009D1	C(CM)-UCFL202-009D1	5/64	1 19/32	1 13/16	2 5/8	1 3/16	1.1	1.1	1.3
FL204D1	S(SM)-UCFL202-010D1	C(CM)-UCFL202-009D1								
FL204D1	S(SM)-UCFL203D1	C(CM)-UCFL203D1	2	40.5	46	67	30	0.5	0.5	0.6
FL204D1	S(SM)-UCFL203-011D1	C(CM)-UCFL203-011D1	5/64	1 19/32	1 13/32	2 5/8	1 3/16	1.1	1.1	1.3
FL204D1	S(SM)-UCFL204D1	C(CM)-UCFL204D1	2	40.5	46	67	30	0.4	0.4	0.6
FL204D1	S(SM)-UCFL204-012D1	C(CM)-UCFL204-012D1	5/64	1 19/32	1 13/16	2 5/8	1 3/16	0.9	0.9	1.3
FL205D1	S(SM)-UCFL205D1	C(CM)-UCFL205D1	2	44.5	51	74	34	0.6	0.6	0.8
FL205D1	S(SM)-UCFL205-013D1	C(CM)-UCFL205-013D1								
FL205D1	S(SM)-UCFL205-014D1	C(CM)-UCFL205-014D1	5/64	1 3/4	2	2 29/32	1 11/32	1.3	1.3	1.8
FL205D1	S(SM)-UCFL205-015D1	C(CM)-UCFL205-015D1								
FL205D1	S(SM)-UCFL205-100D1	C(CM)-UCFL205-100D1								
FL206D1	S(SM)-UCFL206D1	C(CM)-UCFL206D1	2	49	56	85	40	0.9	0.9	1.2
FL206D1	S(SM)-UCFL206-101D1	C(CM)-UCFL206-101D1								
FL206D1	S(SM)-UCFL206-102D1	C(CM)-UCFL206-102D1	5/64	1 15/16	2 7/32	3 11/32	1 9/16	2.0	2.0	2.6
FL206D1	S(SM)-UCFL206-103D1	C(CM)-UCFL206-103D1								
FL206D1	S(SM)-UCFL206-104D1	C(CM)-UCFL206-104D1								
FL207D1	S(SM)-UCFL207D1	C(CM)-UCFL207D1	3	55	59	97	45	1.2	1.2	1.4
FL207D1	S(SM)-UCFL207-104D1	C(CM)-UCFL207-104D1								
FL207D1	S(SM)-UCFL207-105D1	C(CM)-UCFL207-105D1	1/8	2 5/32	2 5/16	3 13/16	1 25/32	2.6	2.6	3.1
FL207D1	S(SM)-UCFL207-106D1	C(CM)-UCFL207-106D1								
FL207D1	S(SM)-UCFL207-107D1	C(CM)-UCFL207-107D1								
FL208D1	S(SM)-UCFL208D1	C(CM)-UCFL208D1	3	62	66	106	50	1.5	1.5	1.9
FL208D1	S(SM)-UCFL208-108D1	C(CM)-UCFL208-108D1	1/8	2 7/16	2 19/32	4 3/16	1 31/32	3.3	3.3	4.2
FL208D1	S(SM)-UCFL208-109D1	C(CM)-UCFL208-109D1								
FL209D1	S(SM)-UCFL209D1	C(CM)-UCFL209D1	3	63	70	113	54	1.8	1.9	2.3
FL209D1	S(SM)-UCFL209-110D1	C(CM)-UCFL209-110D1								
FL209D1	S(SM)-UCFL209-111D1	C(CM)-UCFL209-111D1	1/8	2 15/32	2 3/4	4 7/16	2 1/8	4.0	4.2	5.1
FL209D1	S(SM)-UCFL209-112D1	C(CM)-UCFL209-112D1								

Rhombus flanged units cast housing
Set screw type

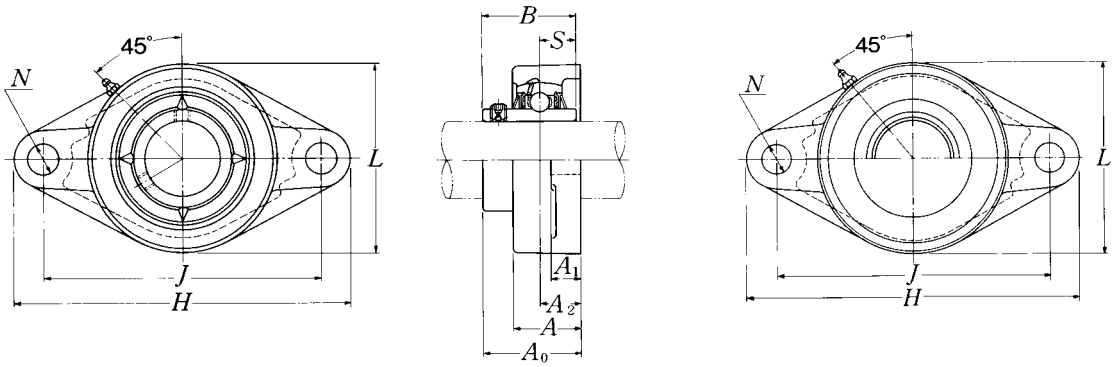

Pressed steel dust cover type
Open end: **S-UCFL···D1**
Closed end: **SM-UCFL···D1**

Shaft dia. mm / inch	Unit number [1]	Nominal dimensions mm / inch H	J	A2	A1	A	N	L	A0	B	S	Bolt size mm / inch	Bearing number
50	UCFL210D1	197	157	22	16	40	19	115	54.6	51.6	19	M16	UC210D1
1 13/16	UCFL210-113D1												UC210-113D1
1 7/8	UCFL210-114D1	7 3/4	6 3/16	55/64	5/8	1 9/16	3/4	4 17/32	2 5/32	2.0315	0.748	5/8	UC210-114D1
1 15/16	UCFL210-115D1												UC210-115D1
2	UCFL210-200D1												UC210-200D1
55	UCFL211D1	224	184	25	18	43	19	130	58.4	55.6	22.2	M16	UC211D1
2	UCFL211-200D1												UC211-200D1
2 1/16	UCFL211-201D1	8 13/16	7 1/4	63/64	23/32	1 11/16	3/4	5 1/8	2 19/64	2.1890	0.874	5/8	UC211-201D1
2 1/8	UCFL211-202D1												UC211-202D1
2 3/16	UCFL211-203D1												UC211-203D1
60	UCFL212D1	250	202	29	18	48	23	140	68.7	65.1	25.4	M20	UC212D1
2 1/4	UCFL212-204D1												UC212-204D1
2 5/16	UCFL212-205D1	9 27/32	7 61/64	1 9/64	23/32	1 7/8	29/32	5 1/2	2 45/64	2.5630	1.000	3/4	UC212-205D1
2 3/8	UCFL212-206D1												UC212-206D1
2 7/16	UCFL212-207D1												UC212-207D1
65	UCFL213D1	258	210	30	22	50	23	155	69.7	65.1	25.4	M20	UC213D1
2 1/2	UCFL213-208D1	10 5/32	8 17/64	1 3/16	7/8	1 31/32	29/32	6 3/32	2 3/4	2.5630	1.000	3/4	UC213-208D1
2 9/16	UCFL213-209D1												UC213-209D1
70	UCFL214D1	265	216	31	22	54	23	160	75.4	74.6	30.2	M20	UC214D1
2 5/8	UCFL214-210D1												UC214-210D1
2 11/16	UCFL214-211D1	10 7/16	8 1/2	1 7/32	7/8	2 1/8	29/32	6 5/16	2 31/32	2.9370	1.189	3/4	UC214-211D1
2 3/4	UCFL214-212D1												UC214-212D1
75	UCFL215D1	275	225	34	22	56	23	165	78.5	77.8	33.3	M20	UC215D1
2 13/16	UCFL215-213D1												UC215-213D1
2 7/8	UCFL215-214D1	10 13/16	8 55/64	1 11/32	7/8	2 7/32	29/32	6 1/2	3 3/32	3.0630	1.311	3/4	UC215-214D1
2 15/16	UCFL215-215D1												UC215-215D1
3	UCFL215-300D1												UC215-300D1
80	UCFL216D1	290	233	34	22	58	25	180	83.3	82.6	33.3	M22	UC216D1
3 1/16	UCFL216-301D1												UC216-301D1
3 1/8	UCFL216-302D1	11 13/32	9 11/64	1 11/32	7/8	2 9/32	63/64	7 3/32	3 9/32	3.2520	1.311	7/8	UC216-302D1
3 3/16	UCFL216-303D1												UC216-303D1

Remarks: 1) These numbers indicate relubricatable type. If maintenance free type is needed, please order without suffix "D1".
Note: Please refer to page 36 for size of grease fitting.

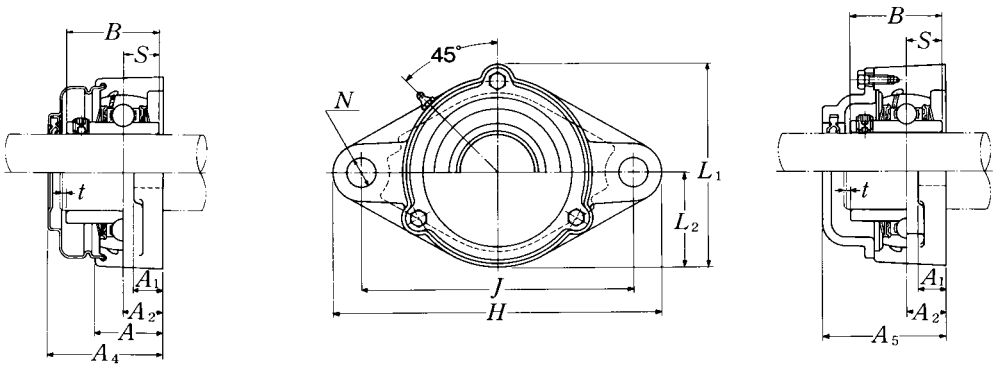

Cast dust cover type
Open end: **C-UCFL···D1**
Closed end: **CM-UCFL···D1**

Housing [1] number	Unit number [1] pressed steel dust cover type	Unit number [1] cast dust cover type	Nominal dimensions					Mass of unit		
			mm			inch		kg		lb
			t max.	A_4	A_5	L_1	L_2	UCFL	S(SM)	C(CM)
FL210D1	S(SM)-UCFL210D1	C(CM)-UCFL210D1	3	65.5	72	120	58	2.0	2.1	2.7
FL210D1	S(SM)-UCFL210-113D1	C(CM)-UCFL210-113D1								
FL210D1	S(SM)-UCFL210-114D1	C(CM)-UCFL210-114D1	1/8	2 19/32	2 27/32	4 23/32	2 9/32	4.4	4.6	6.0
FL210D1	S(SM)-UCFL210-115D1	C(CM)-UCFL210-115D1								
FL210D1	S(SM)-UCFL210-200D1	C(CM)-UCFL210-200D1								
FL211D1	S(SM)-UCFL211D1	C(CM)-UCFL211D1	4	71	75	133	65	2.9	3.0	3.4
FL211D1	S(SM)-UCFL211-200D1	C(CM)-UCFL211-200D1								
FL211D1	S(SM)-UCFL211-201D1	C(CM)-UCFL211-201D1	5/32	2 25/32	2 15/16	5 1/4	2 9/16	6.4	6.6	7.5
FL211D1	S(SM)-UCFL211-202D1	C(CM)-UCFL211-202D1								
FL211D1	S(SM)-UCFL211-203D1	C(CM)-UCFL211-203D1								
FL212D1	S(SM)-UCFL212D1	C(CM)-UCFL212D1	4	80	86	144	70	3.8	4.0	4.6
FL212D1	S(SM)-UCFL212-204D1	C(CM)-UCFL212-204D1								
FL212D1	S(SM)-UCFL212-205D1	C(CM)-UCFL212-205D1	5/32	3 5/32	3 3/8	5 21/32	2 3/4	8.4	8.8	10
FL212D1	S(SM)-UCFL212-206D1	C(CM)-UCFL212-206D1								
FL212D1	S(SM)-UCFL212-207D1	C(CM)-UCFL212-207D1								
FL213D1	S(SM)-UCFL213D1	C(CM)-UCFL213D1	4	83.5	90	157	78	4.8	4.9	5.8
FL213D1	S(SM)-UCFL213-208D1	C(CM)-UCFL213-208D1	5/32	3 9/32	3 17/32	6 3/16	3 1/16	11	11	15
FL213D1	S(SM)-UCFL213-209D1	C(CM)-UCFL213-209D1								
FL214D1	—	C(CM)-UCFL214D1	4	—	98	164	80	5.4	—	7.7
FL214D1		C(CM)-UCFL214-210D1								
FL214D1	—	C(CM)-UCFL214-211D1	5/32	—	3 27/32	6 15/32	3 5/32	12	—	17
FL214D1		C(CM)-UCFL214-212D1								
FL215D1	—	C(CM)-UCFL215D1	4	—	102	169	82	6.0	—	7.1
FL215D1		C(CM)-UCFL215-213D1								
FL215D1	—	C(CM)-UCFL215-214D1	5/32	—	4 1/32	6 21/32	3 7/32	13	—	16
FL215D1		C(CM)-UCFL215-215D1								
FL215D1		C(CM)-UCFL215-300D1								
FL216D1	—	C(CM)-UCFL216D1	4	—	106	183	90	7.4	—	8.6
FL216D1		C(CM)-UCFL216-301D1								
FL216D1	—	C(CM)-UCFL216-302D1	5/32	—	4 3/16	7 7/32	3 17/32	16	—	19
FL216D1		C(CM)-UCFL216-303D1								

Rhombus flanged units cast housing
Set screw type

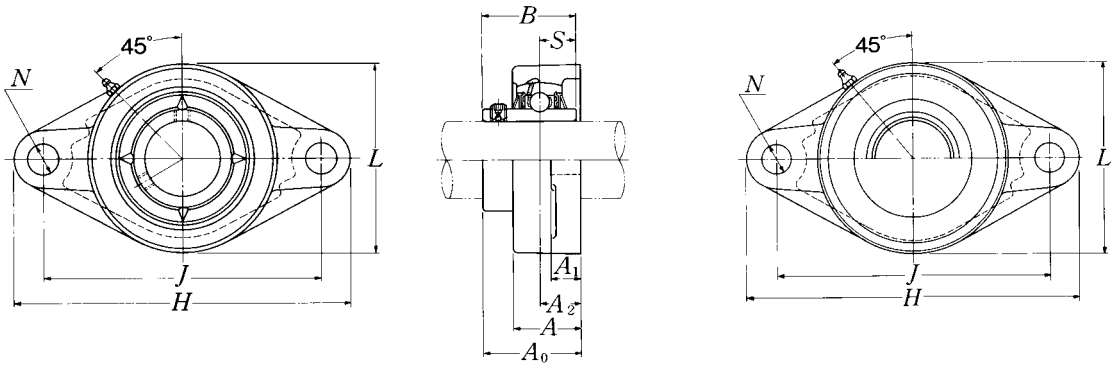

Pressed steel dust cover type
Open end: **S-UCFL···D1**
Closed end: **SM-UCFL···D1**

Shaft dia. mm / inch	Unit number [1]	Nominal dimensions (mm / inch) H	J	A2	A1	A	N	L	A0	B	S	Bolt size mm / inch	Bearing number
85	**UCFL217D1**	305	248	36	24	63	25	190	87.6	85.7	34.1	M22	UC217D1
3 1/4	**UCFL217-304D1**												UC217-304D1
3 5/16	**UCFL217-305D1**	12	9 49/64	1 27/64	15/16	2 15/32	63/64	7 15/32	3 29/64	3.3740	1.343	7/8	UC217-305D1
3 7/16	**UCFL217-307D1**												UC217-307D1
90	**UCFL218D1**	320	265	40	24	68	25	205	96.3	96	39.7	M22	UC218D1
3 1/2	**UCFL218-308D1**	12 19/32	10 7/16	1 37/64	15/16	2 11/16	63/64	8 1/16	3 51/64	3.7795	1.563	7/8	UC218-308D1

Remarks: 1) These numbers indicate relubricatable type. If maintenance free type is needed, please order without suffix "D1".
Note: Please refer to page 36 for size of grease fitting.

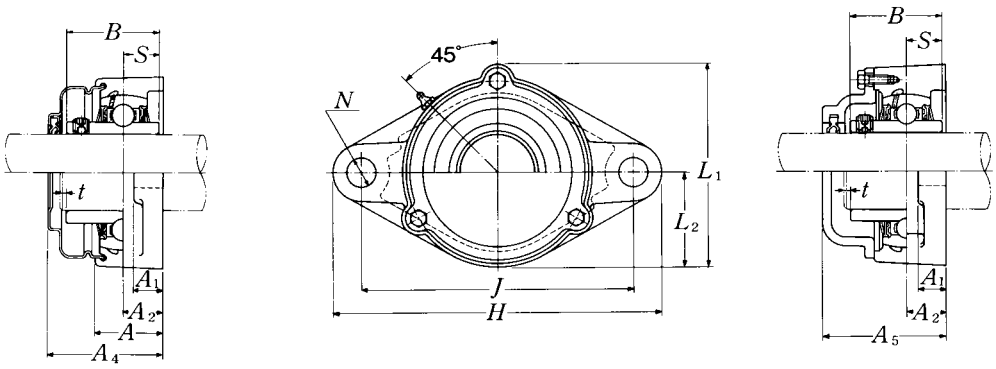

Cast dust cover type
Open end: **C-UCFL···D1**
Closed end: **CM-UCFL···D1**

Housing [1] number	Unit number [1] pressed steel dust cover type	Unit number [1] cast dust cover type	Nominal dimensions					Mass of unit		
			mm			inch		kg		lb
			t max.	A_4	A_5	L_1	L_2	UCFL	S(SM)	C(CM)
FL217D1	—	**C(CM)-UCFL217D1**	5	—	114	192	95	8.8	—	10
FL217D1	—	**C(CM)-UCFL217-304D1**	13/64	—	4 1/2	7 9/16	3 3/4	19	—	22
FL217D1		**C(CM)-UCFL217-305D1**								
FL217D1		**C(CM)-UCFL217-307D1**								
FL218D1	—	**C(CM)-UCFL218D1**	5	—	122	205	102	11	—	13
FL218D1	—	**C(CM)-UCFL218-308D1**	13/64	—	4 13/16	8 1/16	4 1/32	24	—	29

Rhombus flanged units cast housing
Set screw type

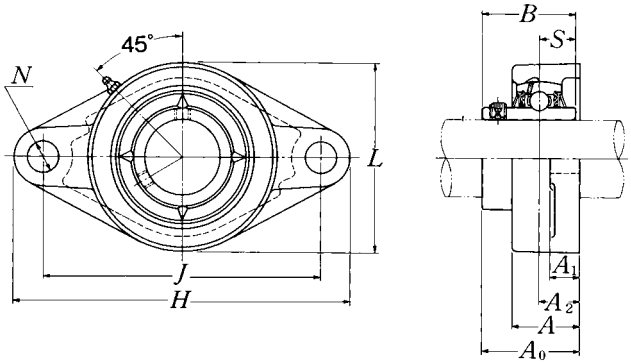

Shaft dia. mm / inch	Unit number [1]	Nominal dimensions H	J	A2	A1	A (mm)	N (inch)	L	A0	B	S	Bolt size mm / inch	Bearing number
25	UCFL305D1	150	113	16	13	29	19	80	39	38	15	M16	UC305D1
13/16	UCFL305-013D1												UC305-013D1
7/8	UCFL305-014D1	5 29/32	4 7/16	5/8	1/2	1 5/32	3/4	3 5/32	1 17/32	1.4961	0.591	5/8	UC305-014D1
15/16	UCFL305-015D1												UC305-015D1
1	UCFL305-100D1												UC305-100D1
30	UCFL306D1	180	134	18	15	32	23	90	44	43	17	M20	UC306D1
1 1/16	UCFL306-101D1												UC306-101D1
1 1/8	UCFL306-102D1	7 3/32	5 9/32	45/64	19/32	1 1/4	29/32	3 17/32	1 47/64	1.6929	0.669	3/4	UC306-102D1
1 3/16	UCFL306-103D1												UC306-103D1
35	UCFL307D1	185	141	20	16	36	23	100	49	48	19	M20	UC307D1
1 1/4	UCFL307-104D1												UC307-104D1
1 5/16	UCFL307-105D1	7 9/32	5 35/64	25/32	5/8	1 13/32	29/32	3 15/16	1 59/64	1.8898	0.748	3/4	UC307-105D1
1 3/8	UCFL307-106D1												UC307-106D1
1 7/16	UCFL307-107D1												UC307-107D1
40	UCFL308D1	200	158	23	17	40	23	112	56	52	19	M20	UC308D1
1 1/2	UCFL308-108D1	7 7/8	6 7/32	29/32	21/32	1 9/16	29/32	4 13/32	2 13/64	2.0472	0.748	3/4	UC308-108D1
1 9/16	UCFL308-109D1												UC308-109D1
45	UCFL309D1	230	177	25	18	44	25	125	60	57	22	M22	UC309D1
1 5/8	UCFL309-110D1												UC309-110D1
1 11/16	UCFL309-111D1	9 1/16	6 31/32	63/64	23/32	1 23/32	63/64	4 29/32	2 23/64	2.2441	0.866	7/8	UC309-111D1
1 3/4	UCFL309-112D1												UC309-112D1
50	UCFL310D1	240	187	28	19	48	25	140	67	61	22	M22	UC310D1
1 13/16	UCFL310-113D1												UC310-113D1
1 7/8	UCFL310-114D1	9 7/16	7 23/64	1 7/64	3/4	1 7/8	63/64	5 1/2	2 41/64	2.4016	0.866	7/8	UC310-114D1
1 15/16	UCFL310-115D1												UC310-115D1
55	UCFL311D1	250	198	30	20	52	25	150	71	66	25	M22	UC311D1
2	UCFL311-200D1												UC311-200D1
2 1/16	UCFL311-201D1	9 27/32	7 51/64	1 3/16	25/32	2 1/16	63/64	5 29/32	2 51/64	2.5984	0.984	7/8	UC311-201D1
2 1/8	UCFL311-202D1												UC311-202D1
2 3/16	UCFL311-203D1												UC311-203D1

Remarks: 1) These numbers indicate relubricatable type. If maintenance free type is needed, please order without suffix "D1".
Note: Please refer to page 36 for size of grease fitting.

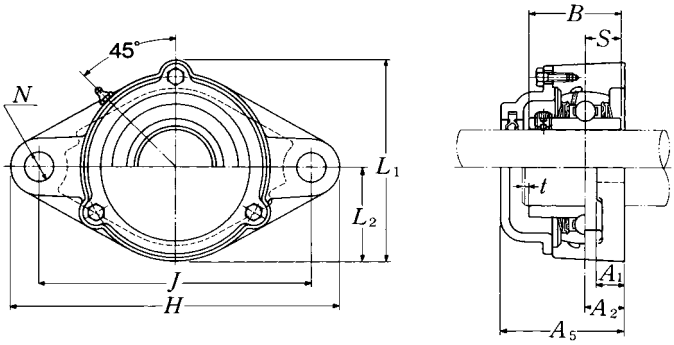

Cast dust cover type
Open end: **C-UCFL···D1**
Closed end: **CM-UCFL···D1**

Housing [1] number	Unit number [1] cast dust cover type	Nominal dimensions				Mass of unit	
		mm		inch		kg	lb
		t max.	A_5	L_1	L_2	UCFL	C(CM)
FL305D1	C(CM)-UCFL305D1	2	56	86	40	0.9	1.2
FL305D1	C(CM)-UCFL305-013D1						
FL305D1	C(CM)-UCFL305-014D1	5/64	2 7/32	3 3/8	1 9/16	2.0	2.7
FL305D1	C(CM)-UCFL305-015D1						
FL305D1	C(CM)-UCFL305-100D1						
FL306D1	C(CM)-UCFL306D1	2	60	101	45	1.4	1.7
FL306D1	C(CM)-UCFL306-101D1						
FL306D1	C(CM)-UCFL306-102D1	5/64	2 3/8	3 31/32	1 25/32	3.1	3.8
FL306D1	C(CM)-UCFL306-103D1						
FL307D1	C(CM)-UCFL307D1	3	68	110	50	1.7	2.1
FL307D1	C(CM)-UCFL307-104D1						
FL307D1	C(CM)-UCFL307-105D1	1/8	2 11/16	4 11/32	1 31/32	3.8	4.6
FL307D1	C(CM)-UCFL307-106D1						
FL307D1	C(CM)-UCFL307-107D1						
FL308D1	C(CM)-UCFL308D1	3	76	122	56	2.2	2.9
FL308D1	C(CM)-UCFL308-108D1	1/8	3	4 13/16	2 7/32	4.9	6.4
FL308D1	C(CM)-UCFL308-109D1						
FL309D1	C(CM)-UCFL309D1	3	80	135	62	3.0	3.8
FL309D1	C(CM)-UCFL309-110D1						
FL309D1	C(CM)-UCFL309-111D1	1/8	3 5/32	5 5/16	2 7/16	6.6	8.4
FL309D1	C(CM)-UCFL309-112D1						
FL310D1	C(CM)-UCFL310D1	3	88	152	70	4.1	5.0
FL310D1	C(CM)-UCFL310-113D1						
FL310D1	C(CM)-UCFL310-114D1	1/8	3 15/32	5 31/32	2 3/4	9.0	11
FL310D1	C(CM)-UCFL310-115D1						
FL311D1	C(CM)-UCFL311D1	4	92	162	75	4.6	5.9
FL311D1	C(CM)-UCFL311-200D1						
FL311D1	C(CM)-UCFL311-201D1	5/32	3 5/8	6 3/8	2 15/16	10	13
FL311D1	C(CM)-UCFL311-202D1						
FL311D1	C(CM)-UCFL311-203D1						

Rhombus flanged units cast housing
Set screw type

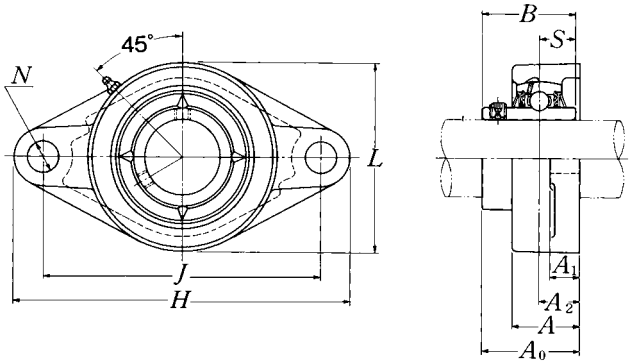

Shaft dia. mm / inch	Unit number [1]	Nominal dimensions mm / inch H	J	A2	A1	A	N	L	A0	B	S	Bolt size mm / inch	Bearing number
60	UCFL312D1	270	212	33	22	56	31	160	78	71	26	M27	UC312D1
2 1/4	UCFL312-204D1												UC312-204D1
2 5/16	UCFL312-205D1	10 5/8	8 11/32	1 19/64	7/8	2 7/32	1 7/32	6 5/16	3 5/64	2.7953	1.024	1	UC312-205D1
2 3/8	UCFL312-206D1												UC312-206D1
2 7/16	UCFL312-207D1												UC312-207D1
65	UCFL313D1	295	240	33	25	58	31	175	78	75	30	M27	UC313D1
2 1/2	UCFL313-208D1	11 5/8	9 29/64	1 19/64	31/32	2 9/32	1 7/32	6 7/8	3 5/64	2.9528	1.181	1	UC313-208D1
2 9/16	UCFL313-209D1												UC313-209D1
70	UCFL314D1	315	250	36	28	61	35	185	81	78	33	M30	UC314D1
2 5/8	UCFL314-210D1												UC314-210D1
2 11/16	UCFL314-211D1	12 13/32	9 27/32	1 27/64	1 3/32	2 13/32	1 3/8	7 9/32	3 3/16	3.0709	1.299	1 1/8	UC314-211D1
2 3/4	UCFL314-212D1												UC314-212D1
75	UCFL315D1	320	260	39	30	66	35	195	89	82	32	M30	UC315D1
2 13/16	UCFL315-213D1												UC315-213D1
2 7/8	UCFL315-214D1	12 19/32	10 15/64	1 17/32	1 3/16	2 19/32	1 3/8	7 11/16	3 1/2	3.2283	1.260	1 1/8	UC315-214D1
2 15/16	UCFL315-215D1												UC315-215D1
3	UCFL315-300D1												UC315-300D1
80	UCFL316D1	355	285	38	32	68	38	210	90	86	34	M33	UC316D1
3 1/16	UCFL316-301D1												UC316-301D1
3 1/8	UCFL316-302D1	13 31/32	11 7/32	1 1/2	1 1/4	2 11/16	1 1/2	8 9/32	3 35/64	3.3858	1.339	1 1/4	UC316-302D1
3 3/16	UCFL316-303D1												UC316-303D1
85	UCFL317D1	370	300	44	32	74	38	220	100	96	40	M33	UC317D1
3 1/4	UCFL317-304D1												UC317-304D1
3 5/16	UCFL317-305D1	14 9/16	11 13/16	1 47/64	1 1/4	2 29/32	1 1/2	8 21/32	3 15/16	3.7795	1.575	1 1/4	UC317-305D1
3 7/16	UCFL317-307D1												UC317-307D1
90	UCFL318D1	385	315	44	36	76	38	235	100	96	40	M33	UC318D1
3 7/16	UCFL318-307D1	15 5/32	12 13/32	1 47/64	1 13/32	3	1 1/2	9 1/4	3 15/16	3.7795	1.575	1 1/4	UC318-307D1
3 1/2	UCFL318-308D1												UC318-308D1

Remarks: 1) These numbers indicate relubricatable type. If maintenance free type is needed, please order without suffix "D1".
Note: Please refer to page 36 for size of grease fitting.

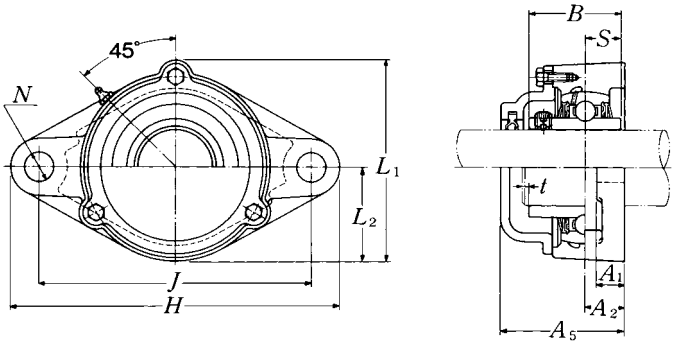

Cast dust cover type
Open end: **C-UCFL···D1**
Closed end: **CM-UCFL···D1**

Housing [1] number	Unit number [1] cast dust cover type	Nominal dimensions				Mass of unit	
		mm		inch		kg	lb
		t max.	A_5	L_1	L_2	UCFL	C(CM)
FL312D1	C(CM)-UCFL312D1	4	100	175	80	5.7	7.7
FL312D1	C(CM)-UCFL312-204D1						
FL312D1	C(CM)-UCFL312-205D1	5/32	3 15/16	6 7/8	3 5/32	13	17
FL312D1	C(CM)-UCFL312-206D1						
FL312D1	C(CM)-UCFL312-207D1						
FL313D1	C(CM)-UCFL313D1	4	103	189	88	7.6	9.9
FL313D1	C(CM)-UCFL313-208D1	5/32	4 1/16	7 7/16	3 15/32	17	22
FL313D1	C(CM)-UCFL313-209D1						
FL314D1	C(CM)-UCFL314D1	4	106	198	92	8.6	11
FL314D1	C(CM)-UCFL314-210D1						
FL314D1	C(CM)-UCFL314-211D1	5/32	4 3/16	7 25/32	3 5/8	19	24
FL314D1	C(CM)-UCFL314-212D1						
FL315D1	C(CM)-UCFL315D1	4	114	210	98	9.9	12
FL315D1	C(CM)-UCFL315-213D1						
FL315D1	C(CM)-UCFL315-214D1	5/32	4 1/2	8 9/32	3 27/32	22	26
FL315D1	C(CM)-UCFL315-215D1						
FL315D1	C(CM)-UCFL315-300D1						
FL316D1	C(CM)-UCFL316D1	4	116	222	105	13	16
FL316D1	C(CM)-UCFL316-301D1						
FL316D1	C(CM)-UCFL316-302D1	5/32	4 9/16	8 3/4	4 1/8	29	35
FL316D1	C(CM)-UCFL316-303D1						
FL317D1	C(CM)-UCFL317D1	5	127	234	110	15	18
FL317D1	C(CM)-UCFL317-304D1						
FL317D1	C(CM)-UCFL317-305D1	13/64	5	9 7/32	4 11/32	33	40
FL317D1	C(CM)-UCFL317-307D1						
FL318D1	C(CM)-UCFL318D1	5	129	247	118	17	21
FL318D1	C(CM)-UCFL318-307D1	13/64	5 3/32	9 23/32	4 21/32	37	46
FL318D1	C(CM)-UCFL318-308D1						

Rhombus flanged units cast housing
Set screw type

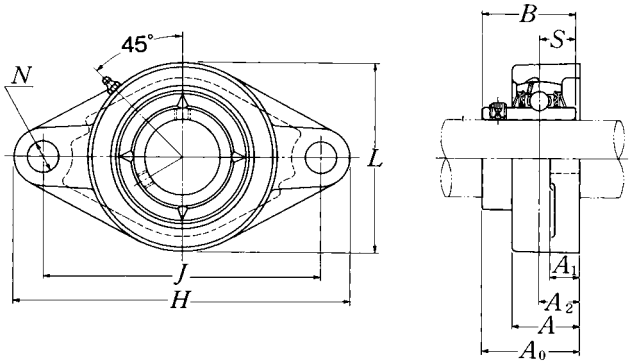

Shaft dia. mm / inch	Unit number [1]	Nominal dimensions										Bolt size mm / inch	Bearing number
						mm		inch					
		H	J	A_2	A_1	A	N	L	A_0	B	S		
95	**UCFL319D1**	405	330	59	40	94	41	250	121	103	41	M36	UC319D1
3 5/8	**UCFL319-310D1**												UC319-310D1
3 11/16	**UCFL319-311D1**	15 15/16	12 63/64	2 21/64	1 9/16	3 11/16	1 39/64	9 27/32	4 49/64	4.0551	1.614	1 3/8	UC319-311D1
3 3/4	**UCFL319-312D1**												UC319-312D1
100	**UCFL320D1**	440	360	59	40	94	44	270	125	108	42	M39	UC320D1
3 13/16	**UCFL320-313D1**												UC320-313D1
3 7/8	**UCFL320-314D1**	17 5/16	14 11/64	2 21/64	1 9/16	3 11/16	1 47/64	10 5/8	4 59/64	4.2520	1.654	1 1/2	UC320-314D1
3 15/16	**UCFL320-315D1**												UC320-315D1
4	**UCFL320-400D1**												UC320-400D1
105	**UCFL321D1**	440	360	59	40	94	44	270	127	112	44	M39	UC321D1
110	**UCFL322D1**	470	390	60	42	96	44	300	131	117	46	M39	UC322D1
120	**UCFL324D1**	520	430	65	48	110	47	330	140	126	51	M42	UC324D1
130	**UCFL326D1**	550	460	65	50	115	47	360	146	135	54	M42	UC326D1
140	**UCFL328D1**	600	500	75	60	125	51	400	161	145	59	M45	UC328D1

Remarks: 1) These numbers indicate relubricatable type. If maintenance free type is needed, please order without suffix "D1".
Note: Please refer to page 36 for size of grease fitting.

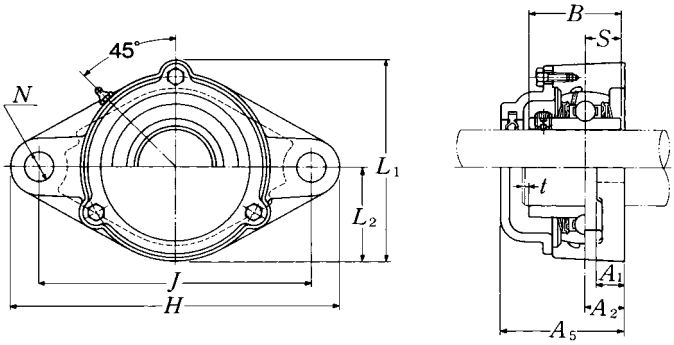

Cast dust cover type
Open end: **C-UCFL···D1**
Closed end: **CM-UCFL···D1**

Housing [1] number	Unit number [1] cast dust cover type	Nominal dimensions				Mass of unit	
		mm		inch		kg	lb
		t max.	A_5	L_1	L_2	UCFL	C(CM)
FL319D1	C(CM)-UCFL319D1	5	149	260	125	22	26
FL319D1	C(CM)-UCFL319-310D1						
FL319D1	C(CM)-UCFL319-311D1	13/64	5 7/8	10 1/4	4 29/32	49	57
FL319D1	C(CM)-UCFL319-312D1						
FL320D1	C(CM)-UCFL320D1	5	154	280	135	26	31
FL320D1	C(CM)-UCFL320-313D1						
FL320D1	C(CM)-UCFL320-314D1	13/64	6 1/16	11 1/32	5 5/16	57	68
FL320D1	C(CM)-UCFL320-315D1						
FL320D1	C(CM)-UCFL320-400D1						
FL321D1	C(CM)-UCFL321D1	5	156	287	135	27	32
FL322D1	C(CM)-UCFL322D1	5	160	315	150	34	39
FL324D1	C(CM)-UCFL324D1	5	172	342	165	48	52
FL326D1	C(CM)-UCFL326D1	6	178	376	180	58	64
FL328D1	C(CM)-UCFL328D1	6	192	410	200	81	90

Rhombus flanged units cast housing
Set screw type

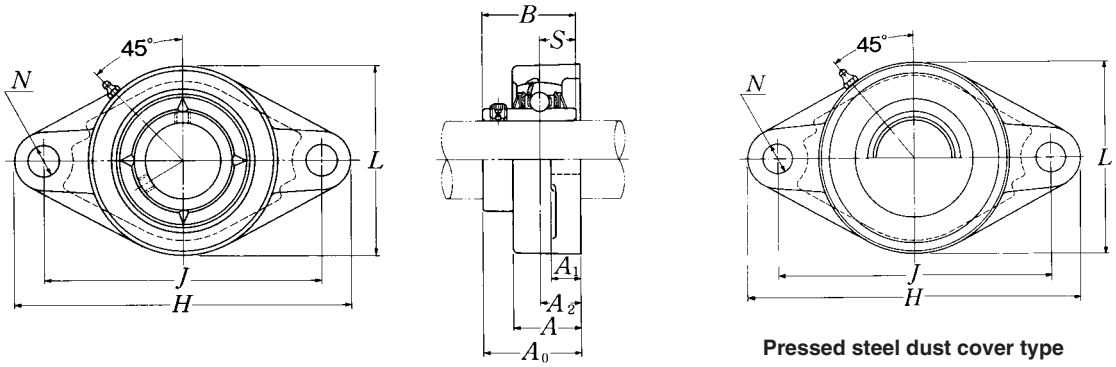

Pressed steel dust cover type
Open end: **S-UCFLX···D1**
Closed end: **SM-UCFLX···D1**

Shaft dia. mm / inch	Unit number [1]	Nominal dimensions H	J	A2	A1	A (mm)	N	L (inch)	A0	B	S	Bolt size mm / inch	Bearing number
25	**UCFLX05D1**	141	117	18	13	30	12	83	40.2	38.1	15.9	M10	UCX05D1
13/16	**UCFLX05-013D1**												UCX05-013D1
7/8	**UCFLX05-014D1**	5 9/16	4 39/64	45/64	1/2	1 3/16	15/32	3 9/32	1 37/64	1.5000	0.626	3/8	UCX05-014D1
15/16	**UCFLX05-015D1**												UCX05-015D1
1	**UCFLX05-100D1**												UCX05-100D1
30	**UCFLX06D1**	156	130	19	15	34	16	95	44.4	42.9	17.5	M14	UCX06D1
1 1/16	**UCFLX06-101D1**												UCX06-101D1
1 1/8	**UCFLX06-102D1**	6 5/32	5 1/8	3/4	19/32	1 11/32	5/8	3 3/4	1 3/4	1.6890	0.689	1/2	UCX06-102D1
1 3/16	**UCFLX06-103D1**												UCX06-103D1
1 1/4	**UCFLX06-104D1**												UC207-104D1
35	**UCFLX07D1**	171	144	21	16	38	16	105	51.2	49.2	19	M14	UCX07D1
1 5/16	**UCFLX07-105D1**												UCX07-105D1
1 3/8	**UCFLX07-106D1**	6 23/32	5 43/64	53/64	5/8	1 1/2	5/8	4 1/8	2 1/64	1.9370	0.748	1/2	UCX07-106D1
1 7/16	**UCFLX07-107D1**												UCX07-107D1
40	**UCFLX08D1**	179	148	22	16	40	16	111	52.2	49.2	19	M14	UCX08D1
1 1/2	**UCFLX08-108D1**	7 1/16	5 53/64	55/64	5/8	1 9/16	5/8	4 3/8	2 1/16	1.9370	0.748	1/2	UCX08-108D1
1 9/16	**UCFLX08-109D1**												UCX08-109D1
45	**UCFLX09D1**	189	157	23	16	40	16	116	55.6	51.6	19	M14	UCX09D1
1 5/8	**UCFLX09-110D1**												UCX09-110D1
1 11/16	**UCFLX09-111D1**	7 7/16	6 3/16	29/32	5/8	1 9/16	5/8	4 9/16	2 3/16	2.0315	0.748	1/2	UCX09-111D1
1 3/4	**UCFLX09-112D1**												UCX09-112D1
1 13/16	**UCFLX09-113D1**												UC210-113D1
50	**UCFLX10D1**	216	184	26	18	44	19	133	59.4	55.6	22.2	M16	UCX10D1
1 7/8	**UCFLX10-114D1**												UCX10-114D1
1 15/16	**UCFLX10-115D1**	8 1/2	7 1/4	1 1/32	23/32	1 23/32	3/4	5 1/4	2 11/32	2.1890	0.874	5/8	UCX10-115D1
2	**UCFLX10-200D1**												UC211-200D1

Remarks: 1) These numbers indicate relubricatable type. If maintenance free type is needed, please order without suffix "D1".
Note: Please refer to page 36 for size of grease fitting.

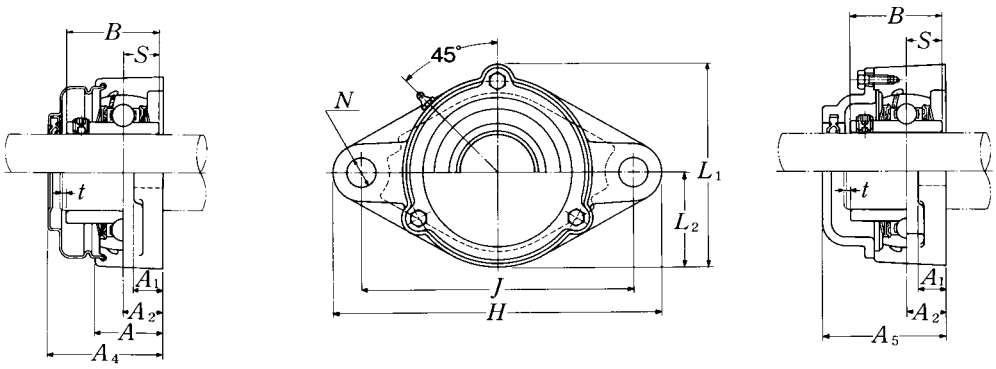

Cast dust cover type
Open end: **C-UCFLX···D1**
Closed end: **CM-UCFLX···D1**

Housing [1] number	Unit number [1] pressed steel dust cover type	Unit number [1] cast dust cover type	Nominal dimensions					Mass of unit		
			mm			inch		kg		lb
			t max.	A_4	A_5	L_1	L_2	UCFLX	S(SM)	C(CM)
FLX05D1	S(SM)-UCFLX05D1	C(CM)-UCFLX05D1	2	49	56	86	41.5	1.0	1.0	1.2
FLX05D1	S(SM)-UCFLX05-013D1	C(CM)-UCFLX05-013D1								
FLX05D1	S(SM)-UCFLX05-014D1	C(CM)-UCFLX05-014D1	5/64	1 15/16	2 7/32	3 3/8	1 5/8	2.2	2.2	2.7
FLX05D1	S(SM)-UCFLX05-015D1	C(CM)-UCFLX05-015D1								
FLX05D1	S(SM)-UCFLX05-100D1	C(CM)-UCFLX05-100D1								
FLX06D1	S(SM)-UCFLX06D1	C(CM)-UCFLX06D1	2	55	59	98.5	47.5	1.5	1.6	1.8
FLX06D1	S(SM)-UCFLX06-101D1	C(CM)-UCFLX06-101D1								
FLX06D1	S(SM)-UCFLX06-102D1	C(CM)-UCFLX06-102D1	5/64	2 5/32	2 5/16	3 7/8	1 7/8	3.3	3.5	4.0
FLX06D1	S(SM)-UCFLX06-103D1	C(CM)-UCFLX06-103D1								
FLX06D1	S(SM)-UCFLX06-104D1	C(CM)-UCFLX06-104D1								
FLX07D1	S(SM)-UCFLX07D1	C(CM)-UCFLX07D1	3	62	66	108.5	52.5	1.8	1.9	2.2
FLX07D1	S(SM)-UCFLX07-105D1	C(CM)-UCFLX07-105D1								
FLX07D1	S(SM)-UCFLX07-106D1	C(CM)-UCFLX07-106D1	1/8	2 7/16	2 19/32	4 9/32	2 1/16	4.0	4.2	4.9
FLX07D1	S(SM)-UCFLX07-107D1	C(CM)-UCFLX07-107D1								
FLX08D1	S(SM)-UCFLX08D1	C(CM)-UCFLX08D1	3	63	70	114.5	55.5	2.0	2.1	2.4
FLX08D1	S(SM)-UCFLX08-108D1	C(CM)-UCFLX08-108D1	1/8	2 15/32	2 3/4	4 1/2	2 3/16	4.4	4.6	5.3
FLX08D1	S(SM)-UCFLX08-109D1	C(CM)-UCFLX08-109D1								
FLX09D1	S(SM)-UCFLX09D1	C(CM)-UCFLX09D1	3	65.5	73	119.5	58	2.2	2.3	2.7
FLX09D1	S(SM)-UCFLX09-110D1	C(CM)-UCFLX09-110D1								
FLX09D1	S(SM)-UCFLX09-111D1	C(CM)-UCFLX09-111D1	1/8	2 19/32	2 7/8	4 23/32	2 9/32	4.9	5.1	6.0
FLX09D1	S(SM)-UCFLX09-112D1	C(CM)-UCFLX09-112D1								
FLX09D1	S(SM)-UCFLX09-113D1	C(CM)-UCFLX09-113D1								
FLX10D1	S(SM)-UCFLX10D1	C(CM)-UCFLX10D1	3	71	76	133.5	66.5	3.0	3.2	3.6
FLX10D1	S(SM)-UCFLX10-114D1	C(CM)-UCFLX10-114D1								
FLX10D1	S(SM)-UCFLX10-115D1	C(CM)-UCFLX10-115D1	1/8	2 25/32	3	5 1/4	2 5/8	6.6	7.1	7.9
FLX10D1	S(SM)-UCFLX10-200D1	C(CM)-UCFLX10-200D1								

Rhombus flanged units (Steel series)
Set screw type

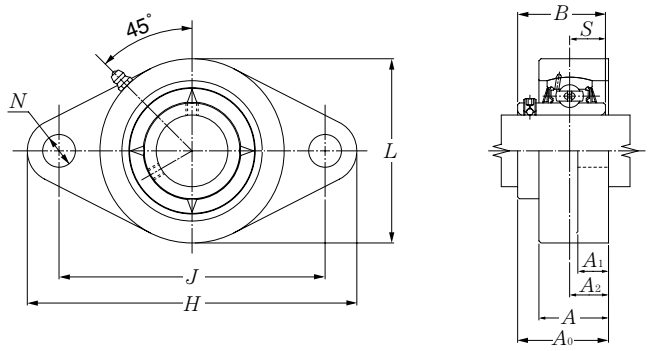

Shaft dia. mm	Unit number [1]	Nominal dimensions mm										Bolt size mm	Bearing number
		H	J	A_2	A_1	A	N	L	A_0	B	S		
12	UCFLG201D1	113	90	15	11	25.5	12	60	33.3	31	12.7	M10	UC201D1
15	UCFLG202D1	113	90	15	11	25.5	12	60	33.3	31	12.7	M10	UC202D1
17	UCFLG203D1	113	90	15	11	25.5	12	60	33.3	31	12.7	M10	UC203D1
20	UCFLG204D1	113	90	15	11	25.5	12	60	33.3	31	12.7	M10	UC204D1
25	UCFLG205D1	130	99	16	13	27	16	68	35.8	34.1	14.3	M14	UC205D1
30	UCFLG206D1	148	117	18	13	31	16	80	40.2	38.1	15.9	M14	UC206D1
35	UCFLG207D1	161	130	19	15	34	16	90	44.4	42.9	17.5	M14	UC207D1
40	UCFLG208D1	175	144	21	15	36	16	100	51.2	49.2	19	M14	UC208D1
45	UCFLG209D1	188	148	22	16	38	19	108	52.2	49.2	19	M16	UC209D1
50	UCFLG210D1	197	157	22	16	40	19	115	54.6	51.6	19	M16	UC210D1
55	UCFLG211D1	224	184	25	18	43	19	130	58.4	55.6	22.2	M16	UC211D1
60	UCFLG212D1	250	202	29	18	48	23	140	68.7	65.1	25.4	M20	UC212D1
65	UCFLG213D1	258	210	30	22	50	23	155	69.7	65.1	25.4	M20	UC213D1
70	UCFLG214D1	265	216	31	22	54	23	160	75.4	74.6	30.2	M20	UC214D1
75	UCFLG215D1	275	225	34	22	56	23	165	78.5	77.8	33.3	M20	UC215D1
80	UCFLG216D1	290	233	34	22	58	25	180	83.3	82.6	33.3	M22	UC216D1
85	UCFLG217D1	305	248	36	24	63	25	190	87.6	85.7	34.1	M22	UC217D1
90	UCFLG218D1	320	265	40	24	68	25	205	96.3	96	39.7	M22	UC218D1

Remarks: 1) These numbers indicate relubricatable type. If maintenance free type is needed, please order without suffix "D1".
Note: Please refer to page 36 for size of grease fitting.

Housing [1)] number	Mass of unit kg
FLG204D1	0.5
FLG204D1	0.5
FLG204D1	0.5
FLG204D1	0.5
FLG205D1	0.7
FLG206D1	1.1
FLG207D1	1.4
FLG208D1	1.8
FLG209D1	2.4
FLG210D1	2.6
FLG211D1	3.6
FLG212D1	4.7
FLG213D1	6.0
FLG214D1	6.6
FLG215D1	7.2
FLG216D1	8.8
FLG217D1	11
FLG218D1	13

Rhombus flanged units (Steel series)
Set screw type

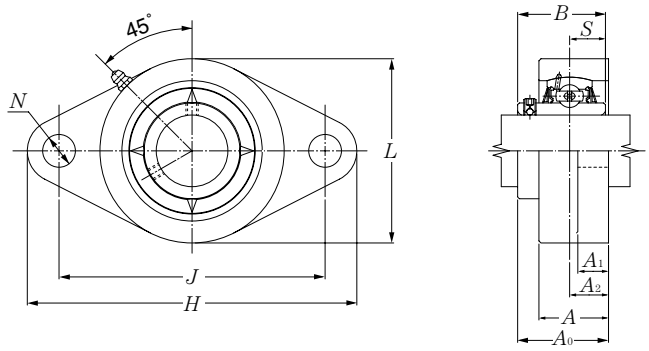

Shaft dia. mm	Unit number [1]	Nominal dimensions mm										Bolt size mm	Bearing number
		H	J	A_2	A_1	A	N	L	A_0	B	S		
25	**UCFLG305D1**	150	113	16	13	29	19	80	39	38	15	M16	UC305D1
30	**UCFLG306D1**	180	134	18	15	32	23	90	44	43	17	M20	UC306D1
35	**UCFLG307D1**	185	141	20	16	36	23	100	49	48	19	M20	UC307D1
40	**UCFLG308D1**	200	158	23	17	40	23	112	56	52	19	M20	UC308D1
45	**UCFLG309D1**	230	177	25	18	44	25	125	60	57	22	M22	UC309D1
50	**UCFLG310D1**	240	187	28	19	48	25	140	67	61	22	M22	UC310D1
55	**UCFLG311D1**	250	198	30	20	52	25	150	71	66	25	M22	UC311D1
60	**UCFLG312D1**	270	212	33	22	56	31	160	78	71	26	M27	UC312D1
65	**UCFLG313D1**	295	240	33	25	58	31	175	78	75	30	M27	UC313D1
70	**UCFLG314D1**	315	250	36	28	61	35	185	81	78	33	M30	UC314D1
75	**UCFLG315D1**	320	260	39	30	66	35	195	89	82	32	M30	UC315D1
80	**UCFLG316D1**	355	285	38	32	68	38	210	90	86	34	M33	UC316D1
85	**UCFLG317D1**	370	300	44	32	74	38	220	100	96	40	M33	UC317D1
90	**UCFLG318D1**	385	315	44	36	76	38	235	100	96	40	M33	UC318D1
95	**UCFLG319D1**	405	330	59	40	94	41	250	121	103	41	M36	UC319D1
100	**UCFLG320D1**	440	360	59	40	94	44	270	125	108	42	M39	UC320D1
105	**UCFLG321D1**	440	360	59	40	94	44	270	127	112	44	M39	UC321D1
110	**UCFLG322D1**	470	390	60	42	96	44	300	131	117	46	M39	UC322D1
120	**UCFLG324D1**	520	430	65	48	110	47	330	140	126	51	M42	UC324D1
130	**UCFLG326D1**	550	460	65	50	115	47	360	146	135	54	M42	UC326D1
140	**UCFLG328D1**	600	500	75	60	125	51	400	161	145	59	M45	UC328D1

Remarks: 1) These numbers indicate relubricatable type. If maintenance free type is needed, please order without suffix "D1".
Note: Please refer to page 36 for size of grease fitting.

Housing [1)] number	Mass of unit kg
FLG305D1	1.1
FLG306D1	1.6
FLG307D1	2.0
FLG308D1	2.6
FLG309D1	3.7
FLG310D1	4.8
FLG311D1	5.7
FLG312D1	6.9
FLG313D1	8.9
FLG314D1	11
FLG315D1	12
FLG316D1	15
FLG317D1	17
FLG318D1	21
FLG319D1	27
FLG320D1	32
FLG321D1	31
FLG322D1	40
FLG324D1	56
FLG326D1	69
FLG328D1	96

Rhombus flanged units (Stainless series)
Set screw type

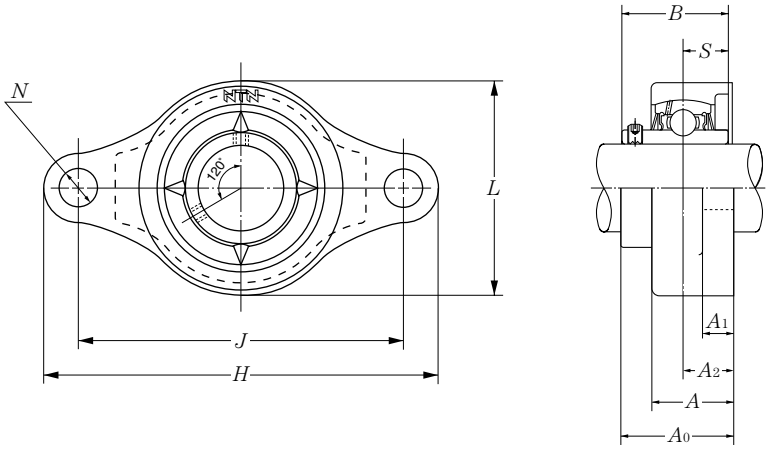

Shaft dia. mm	Unit number	Nominal dimensions mm										Bolt size mm
		H	J	A_2	A_1	A	N	L	A_0	B	S	
20	F-UCFM204/LP03	112	90	15	10	25.5	12	60	33.3	31	12.7	M10
25	F-UCFM205/LP03	127	99	16	10	26.5	16	68	35.8	34.1	14.3	M14
30	F-UCFM206/LP03	145	117	18	10	30	16	80	40.2	38.1	15.9	M14
35	F-UCFM207/LP03	158	130	19	12	32	16	90	44.4	42.9	17.5	M14
40	F-UCFM208/LP03	172	144	21	12	35	16	100	51.2	49.2	19	M14
45	F-UCFM209/LP03	180	148	22	13	36	19	108	52.2	49.2	19	M16
50	F-UCFM210/LP03	189	157	22	13	37	19	115	54.6	51.6	19	M16

Remark: 1) This series uses solid grease in the bearings as standard. A stainless steel bearing unit packed with a food grade grease or heat resistance grease is also available.
2) The basic dynamic load rating C_r of the bearing is different from a bearing made with standard bearing steel.

Bearing number	Basic load ratings dynamic kN C_r	Basic load ratings static kN C_{or}	Housing number	Mass of unit kg
F-UC204D1/LP03	9.9	6.65	FM204	0.4
F-UC205D1/LP03	10.8	7.85	FM205	0.6
F-UC206D1/LP03	15.0	11.3	FM206	0.8
F-UC207D1/LP03	19.7	15.3	FM207	1.1
F-UC208D1/LP03	22.4	17.8	FM208	1.4
F-UC209D1/LP03	25.2	20.4	FM209	1.8
F-UC210D1/LP03	27.0	23.2	FM210	1.9

Rhombus flanged units (Plastic housing series)
Set screw type

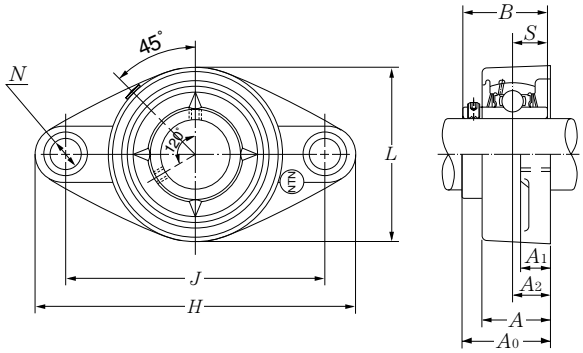

Shaft dia. mm	Unit number	Nominal dimensions mm										Bolt size mm
		H	J	A_2	A_1	A	N	L	A_0	B	S	
20	F-UCFLR204/LP03	113	90	15.4	11.4	26.5	11 ※	64	33.7	31	12.7	M10
25	F-UCFLR205/LP03	130	99	17	13.5	29.1	11 ※	68	36.8	34.1	14.3	M10 ※
30	F-UCFLR206/LP03	148	117	19	13.3	30.5	11 ※	80	41.2	38.1	15.9	M10 ※
35	F-UCFLR207/LP03	163	130	18	16.1	32.8	13 ※	90	43.4	42.9	17.5	M12 ※
40	F-UCFLR208/LP03	175	144	21.5	20	37.5	14 ※	100	51.7	49.2	19	M12 ※

Remark: 1) This series uses solid grease in the bearings as standard. Ball bearings packed with a food grade grease are also available.
2) Some dimensions are different from those for a cast iron housings (JIS product). (Main parts are shown with " ※ ")
3) The basic dynamic load rating C_r of the bearing is different from a bearing made with standard bearing steel.

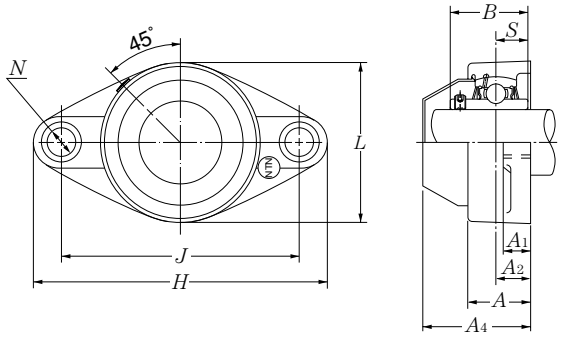

Resin dust cover type

Bearing number	Basic load ratings dynamic kN C_r	Basic load ratings static kN C_{or}	Housing number	Unit number resin dust cover type	Nominal dimension mm A_4	Mass of unit kg F-UCFLR	Mass of unit kg F-RM-UCFLR
F-UC204D1/LP03	9.9	6.65	FLR204	**F-RM-UCFLR204/LP03**	47	0.3	0.3
F-UC205D1/LP03	10.8	7.85	FLR205	**F-RM-UCFLR205/LP03**	51	0.3	0.3
F-UC206D1/LP03	15.0	11.3	FLR206	**F-RM-UCFLR206/LP03**	59	0.5	0.5
F-UC207D1/LP03	19.7	15.3	FLR207	**F-RM-UCFLR207/LP03**	61	0.7	0.7
F-UC208D1/LP03	22.4	17.8	FLR208	**F-RM-UCFLR208/LP03**	71	0.9	1.0

Modified rhombus flanged units cast housing
Set screw type

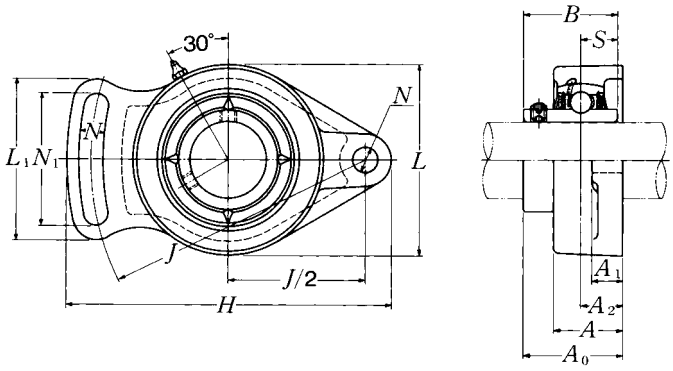

Shaft dia. mm / inch	Unit number [1]	Nominal dimensions (mm / inch) H	J	A2	A1	A	N	N1	L	L1	A0	B	S	Bolt size mm / inch
12	UCFA201D1	98	78	15	12	25.5	10	40	60	50	33.3	31	12.7	M 8
1/2	UCFA201-008D1	3 27/32	3 1/16	19/32	15/32	1	25/64	1 9/16	2 3/8	1 31/32	1 5/16	1.2205	0.500	5/16
15	UCFA202D1	98	78	15	12	25.5	10	40	60	50	33.3	31	12.7	M 8
9/16	UCFA202-009D1	3 27/32	3 1/16	19/32	15/32	1	25/64	1 9/16	2 3/8	1 31/32	1 5/16	1.2205	0.500	5/16
5/8	UCFA202-010D1													
17	UCFA203D1	98	78	15	12	25.5	10	40	60	50	33.3	31	12.7	M 8
11/16	UCFA203-011D1	3 27/32	3 1/16	19/32	15/32	1	25/64	1 9/16	2 3/8	1 31/32	1 5/16	1.2205	0.500	5/16
20	UCFA204D1	98	78	15	12	25.5	10	40	60	50	33.3	31	12.7	M 8
3/4	UCFA204-012D1	3 27/32	3 1/16	19/32	15/32	1	25/64	1 9/16	2 3/8	1 31/32	1 5/16	1.2205	0.500	5/16
25	UCFA205D1	124	96	15	14	26.5	13	49	70	64	34.8	34.1	14.3	M10
13/16	UCFA205-013D1													
7/8	UCFA205-014D1	4 7/8	3 25/32	19/32	9/16	1 1/32	33/64	1 15/16	2 3/4	2 17/32	1 3/8	1.3425	0.563	3/8
15/16	UCFA205-015D1													
1	UCFA205-100D1													
30	UCFA206D1	141	115	18	14	31	13	53	80	68	40.2	38.1	15.9	M10
1 1/16	UCFA206-101D1													
1 1/8	UCFA206-102D1	5 9/16	4 17/32	45/64	9/16	1 7/32	33/64	2 3/32	3 5/32	2 11/16	1 37/64	1.5000	0.626	3/8
1 3/16	UCFA206-103D1													
1 1/4	UCFA206-104D1													
35	UCFA207D1	155	128	20	16	34	15	60	90	75	45.4	42.9	17.5	M12
1 1/4	UCFA207-104D1													
1 5/16	UCFA207-105D1	6 3/32	5 1/32	25/32	5/8	1 11/32	19/32	2 3/8	3 17/32	2 15/16	1 25/32	1.6890	0.689	7/16
1 3/8	UCFA207-106D1													
1 7/16	UCFA207-107D1													
40	UCFA208D1	171	142	22	16	36	15	69	100	84	52.2	49.2	19	M12
1 1/2	UCFA208-108D1	6 23/32	5 19/32	55/64	5/8	1 13/32	19/32	2 23/32	3 15/16	3 5/16	2 1/16	1.9370	0.748	7/16
1 9/16	UCFA208-109D1													

Remarks: 1) These numbers indicate relubricatable type. If maintenance free type is needed, please order without suffix "D1".
Note: Please refer to page 36 for size of grease fitting.

Bearing number	Housing [1)] number	Mass of unit kg lb
UC201D1	FA204D1	0.5
UC201-008D1	FA204D1	1.1
UC202D1	FA204D1	0.5
UC202-009D1	FA204D1	1.1
UC202-010D1	FA204D1	
UC203D1	FA204D1	0.5
UC203-011D1	FA204D1	1.1
UC204D1	FA204D1	0.5
UC204-012D1	FA204D1	1.1
UC205D1	FA205D1	0.7
UC205-013D1	FA205D1	1.5
UC205-014D1	FA205D1	
UC205-015D1	FA205D1	
UC205-100D1	FA205D1	
UC206D1	FA206D1	0.9
UC206-101D1	FA206D1	2.0
UC206-102D1	FA206D1	
UC206-103D1	FA206D1	
UC206-104D1	FA206D1	
UC207D1	FA207D1	1.2
UC207-104D1	FA207D1	2.7
UC207-105D1	FA207D1	
UC207-106D1	FA207D1	
UC207-107D1	FA207D1	
UC208D1	FA208D1	1.5
UC208-108D1	FA208D1	3.3
UC208-109D1	FA208D1	

Modified rhombus flanged units cast housing
Set screw type

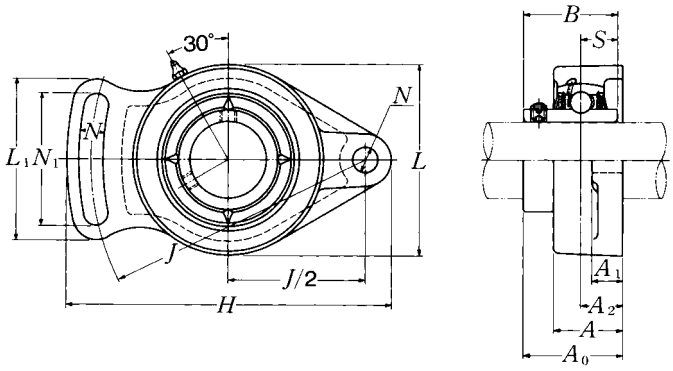

Shaft dia. mm / inch	Unit number [1]	Nominal dimensions												Bolt size mm / inch
							mm		inch					
		H	J	A_2	A_1	A	N	N_1	L	L_1	A_0	B	S	
45	UCFA209D1	179	146	22	18	38	17	72	110	88	52.2	49.2	19	M14
1 5/8	UCFA209-110D1													
1 11/16	UCFA209-111D1	7 1/16	5 3/4	55/64	23/32	1 1/2	43/64	2 27/32	4 11/32	3 15/32	2 1/16	1.9370	0.748	1/2
1 3/4	UCFA209-112D1													
50	UCFA210D1	189	155	22	18	40	17	75	115	92	54.6	51.6	19	M14
1 13/16	UCFA210-113D1													
1 7/8	UCFA210-114D1	7 7/16	6 3/32	55/64	23/32	1 9/16	43/64	2 15/16	4 17/32	3 5/8	2 5/32	2.0315	0.748	1/2
1 15/16	UCFA210-115D1													
2	UCFA210-200D1													
55	UCFA211D1	216	182	26	20	43	17	85	130	102	59.4	55.6	22.2	M14
2	UCFA211-200D1													
2 1/16	UCFA211-201D1	8 1/8	7 5/32	1 1/32	25/32	1 11/16	43/64	3 11/32	5 1/8	4 1/32	2 11/32	2.1890	0.874	1/2
2 1/8	UCFA211-202D1													
2 3/16	UCFA211-203D1													

Remarks: 1) These numbers indicate relubricatable type. If maintenance free type is needed, please order without suffix "D1".
Note: Please refer to page 36 for size of grease fitting.

Bearing number	Housing [1)] number	Mass of unit kg lb
UC209D1	FA209D1	1.9
UC209-110D1	FA209D1	
UC209-111D1	FA209D1	4.2
UC209-112D1	FA209D1	
UC210D1	FA210D1	2.2
UC210-113D1	FA210D1	
UC210-114D1	FA210D1	4.9
UC210-115D1	FA210D1	
UC210-200D1	FA210D1	
UC211D1	FA211D1	2.9
UC211-200D1	FA211D1	
UC211-201D1	FA211D1	6.4
UC211-202D1	FA211D1	
UC211-203D1	FA211D1	

Modified flanged units cast housing
Set screw type

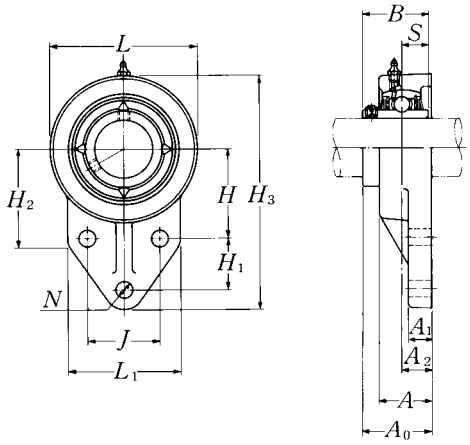

Shaft dia. mm / inch	Unit number [1]	Nominal dimensions mm / inch													
		H_3	J	A_2	A_1	A	N	H	H_1	L_1	H_2	L	A_0	B	S
12	UCFH201D1	110	32	15	13	25.5	10	42	27	52	52	62	33.3	31	12.7
1/2	UCFH201-008D1	4 11/32	1 17/64	19/32	1/2	1	25/64	1 21/32	1 1/16	2 1/16	2 1/16	2 7/16	1 5/16	1.2205	0.500
15	UCFH202D1	110	32	15	13	25.5	10	42	27	52	52	62	33.3	31	12.7
9/16	UCFH202-009D1	4 11/32	1 17/64	19/32	1/2	1	25/64	1 21/32	1 1/16	2 1/16	2 1/16	2 7/16	1 5/16	1.2205	0.500
5/8	UCFH202-010D1														
17	UCFH203D1	110	32	15	13	25.5	10	42	27	52	52	62	33.3	31	12.7
11/16	UCFH203-011D1	4 11/32	1 17/64	19/32	1/2	1	25/64	1 21/32	1 1/16	2 1/16	2 1/16	2 7/16	1 5/16	1.2205	0.500
20	UCFH204D1	110	32	15	13	25.5	10	42	27	52	52	62	33.3	31	12.7
3/4	UCFH204-012D1	4 11/32	1 17/64	19/32	1/2	1	25/64	1 21/32	1 1/16	2 1/16	2 1/16	2 7/16	1 5/16	1.2205	0.500
25	UCFH205D1	116	34	16	13	27	10	45	27	56	52	68	35.8	34.1	14.3
13/16	UCFH205-013D1														
7/8	UCFH205-014D1	4 9/16	1 11/32	5/8	1/2	1 1/16	25/64	1 49/64	1 1/16	2 7/32	2 1/16	2 11/16	1 13/32	1.3425	0.563
15/16	UCFH205-015D1														
1	UCFH205-100D1														
30	UCFH206D1	130	40	18	13	31	10	50	29	65	55	78	40.2	38.1	15.9
1 1/16	UCFH206-101D1														
1 1/8	UCFH206-102D1	5 1/8	37/64	45/64	1/2	1 7/32	25/64	1 31/32	1 9/64	2 9/16	2 5/32	3 1/16	1 37/64	1.5000	0.626
1 3/16	UCFH206-103D1														
1 1/4	UCFH206-104D1														
35	UCFH207D1	144	46	19	15	34	10	55	32	70	62	90	44.4	42.9	17.5
1 1/4	UCFH207-104D1														
1 5/16	UCFH207-105D1	5 21/32	1 13/16	3/4	19/32	1 11/32	25/64	2 11/64	1 17/64	2 3/4	2 7/16	3 17/32	1 3/4	1.6890	0.689
1 3/8	UCFH207-106D1														
1 7/16	UCFH207-107D1														
40	UCFH208D1	164	50	21	16	36	12	60	41	78	72	100	51.2	49.2	19
1 1/2	UCFH208-108D1	6 15/32	1 31/32	53/64	5/8	1 13/32	15/32	2 23/64	1 39/64	3 1/16	2 27/32	3 15/16	2 1/64	1.9370	0.748
1 9/16	UCFH208-109D1														
45	UCFH209D1	174	54	22	18	38	12	65	43	80	76	106	52.2	49.2	19
1 5/8	UCFH209-110D1														
1 11/16	UCFH209-111D1	6 27/32	2 1/8	55/64	23/32	1 1/2	15/32	2 9/16	1 11/16	3 5/32	3	4 3/16	2 1/16	1.9370	0.748
1 3/4	UCFH209-112D1														

Remarks: 1) These numbers indicate relubricatable type. If maintenance free type is needed, please order without suffix "D1".
Note: Please refer to page 36 for size of grease fitting.

Bolt size mm inch	Bearing number	Housing [1)] number	Mass of unit kg lb
M 8 5/16	UC201D1 UC201-008D1	FH204D1 FH204D1	0.6 1.3
M 8 5/16	UC202D1 UC202-009D1 UC202-010D1	FH204D1 FH204D1 FH204D1	0.6 1.3
M 8 5/16	UC203D1 UC203-011D1	FH204D1 FH204D1	0.6 1.3
M 8 5/16	UC204D1 UC204-012D1	FH204D1 FH204D1	0.6 1.3
M 8 5/16	UC205D1 UC205-013D1 UC205-014D1 UC205-015D1 UC205-100D1	FH205D1 FH205D1 FH205D1 FH205D1 FH205D1	0.7 1.5
M 8 5/16	UC206D1 UC206-101D1 UC206-102D1 UC206-103D1 UC206-104D1	FH206D1 FH206D1 FH206D1 FH206D1 FH206D1	0.9 2.0
M 8 5/16	UC207D1 UC207-104D1 UC207-105D1 UC207-106D1 UC207-107D1	FH207D1 FH207D1 FH207D1 FH207D1 FH207D1	1.3 2.9
M10 3/8	UC208D1 UC208-108D1 UC208-109D1	FH208D1 FH208D1 FH208D1	1.8 4.0
M10 3/8	UC209D1 UC209-110D1 UC209-111D1 UC209-112D1	FH209D1 FH209D1 FH209D1 FH209D1	2.1 4.6

Modified flanged units cast housing
Set screw type

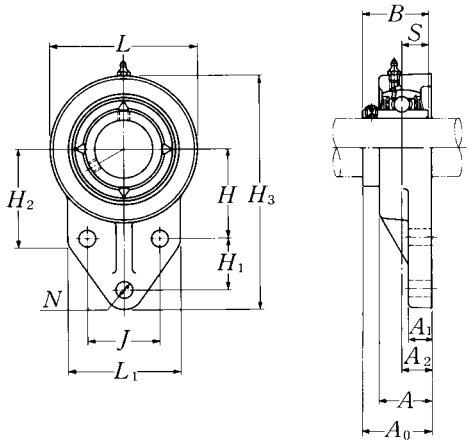

Shaft dia. mm / inch	Unit number [1]	Nominal dimensions mm / inch													
		H_3	J	A_2	A_1	A	N	H	H_1	L_1	H_2	L	A_0	B	S
50	UCFH210D1	184	58	22	18	40	12	68	46	86	82	112	54.6	51.6	19
1 13/16	UCFH210-113D1														
1 7/8	UCFH210-114D1	7 1/4	2 9/32	55/64	23/32	1 9/16	15/32	2 43/64	1 13/16	3 3/8	3 7/32	4 13/32	2 5/32	2.0315	0.748
1 15/16	UCFH210-115D1														
2	UCFH210-200D1														

Remarks: 1) These numbers indicate relubricatable type. If maintenance free type is needed, please order without suffix "D1".
Note: Please refer to page 36 for size of grease fitting.

Bolt size mm inch	Bearing number	Housing [1)] number	Mass of unit kg lb
M10	UC210D1	FH210D1	2.4
3/8	UC210-113D1	FH210D1	5.3
	UC210-114D1	FH210D1	
	UC210-115D1	FH210D1	
	UC210-200D1	FH210D1	

Light rhombus flanged units cast housing
Set screw type

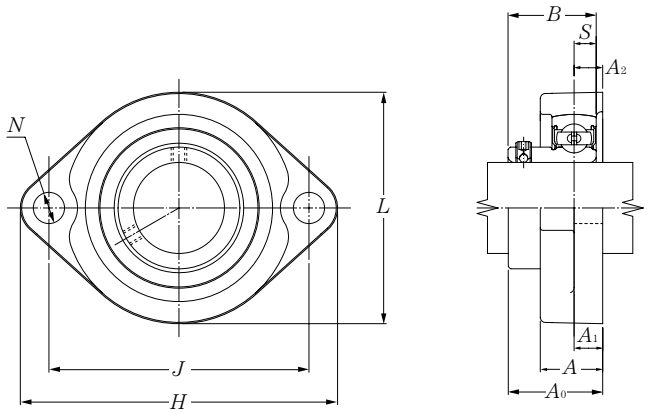

Shaft dia. mm / inch	Unit number [1]	Nominal dimensions (mm / inch) H	J	A2	A1	A	N	L	A0	B	S	Bolt size mm / inch	Bearing number[1]
12	ASFB201	81	63.5	9.5	9.5	18	7	56	25.5	22	6	M6	AS201
1/2	ASFB201-008	3 3/16	2 1/2	3/8	3/8	23/32	9/32	2 7/32	1	0.8661	0.236	1/4	AS201-008
15	ASFB202	81	63.5	9.5	9.5	18	7	56	25.5	22	6	M6	AS202
9/16	ASFB202-009	3 3/16	2 1/2	3/8	3/8	23/32	9/32	2 7/32	1	0.8661	0.236	1/4	AS202-009
5/8	ASFB202-010												AS202-010
17	ASFB203	81	63.5	9.5	9.5	18	7	56	25.5	22	6	M6	AS203
11/16	ASFB203-011	3 3/16	2 1/2	3/8	3/8	23/32	9/32	2 7/32	1	0.8661	0.236	1/4	AS203-011
20	ASFB204	90	71.5	11	11	20	10	61	29	25	7	M8	AS204
3/4	ASFB204-012	3 35/64	2 13/16	7/16	7/16	25/32	25/64	2 13/32	1 9/64	0.9843	0.276	5/16	AS204-012
25	ASFB205	95	76	11	11	20	10	64	30.5	27	7.5	M8	AS205
13/16	ASFB205-013												AS205-013
7/8	ASFB205-014	3 3/4	2 63/64	7/16	7/16	25/32	25/64	2 17/32	1 13/64	1.0630	0.295	5/16	AS205-014
15/16	ASFB205-015												AS205-015
1	ASFB205-100												AS205-100
30	ASFB206	113	90.5	12	12	22.5	12	76	33	29	8	M10	AS206
1 1/16	ASFB206-101												AS206-101
1 1/8	ASFB206-102	4 7/16	3 9/16	15/32	15/32	7/8	15/32	3	1 19/64	1.1417	0.315	3/8	AS206-102
1 3/16	ASFB206-103												AS206-103
1 1/4	ASFB206-104												AS206-104
35	ASFB207	122	100	11	13	24	12	89	36.5	34	8.5	M10	AS207
1 1/4	ASFB207-104												AS207-104
1 5/16	ASFB207-105	4 51/64	3 15/16	7/16	1/2	15/16	15/32	3 1/2	1 7/16	1.3386	0.335	3/8	AS207-105
1 3/8	ASFB207-106												AS207-106
1 7/16	ASFB207-107												AS207-107

Remarks: 1) If relubricatable type is needed, please order with suffix "D1".

Housing[1)] number	Mass of unit kg	lb
FB201	0.3	
FB201	0.7	
FB201	0.3	
FB201	0.7	
FB201	0.2	
FB201	0.4	
FB204	0.3	
FB204	0.7	
FB205	0.3	
FB205	0.7	
FB206	0.5	
FB206	1.1	
FB207	0.8	
FB207	1.8	

Light rhombus flanged units cast housing
Set screw type

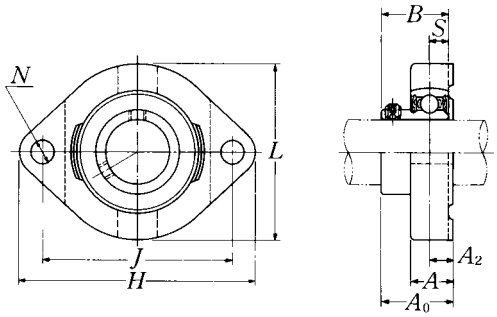

Shaft dia. mm / inch	Unit number [1]	Nominal dimensions mm / inch H	J	A2	A	N	L	A0	B	S	Bolt size mm / inch	Bearing number[1]
12	ASFD201	81	63	8.5	15	7	59	24.5	22	6	M6	AS201
1/2	ASFD201-008	3 3/16	2 31/64	21/64	19/32	9/32	2 5/16	31/32	0.8661	0.236	1/4	AS201-008
15	ASFD202	81	63	8.5	15	7	59	24.5	22	6	M6	AS202
9/16	ASFD202-009	3 3/16	2 31/64	21/64	19/32	9/32	2 5/16	31/32	0.8661	0.236	1/4	AS202-009
5/8	ASFD202-010											AS202-010
17	ASFD203	81	63	8.5	15	7	59	24.5	22	6	M6	AS203
11/16	ASFD203-011	3 3/16	2 31/64	21/64	19/32	9/32	2 5/16	31/32	0.8661	0.236	1/4	AS203-011
20	ASFD204	90	71	9.5	17	10	67	27.5	25	7	M8	AS204
3/4	ASFD204-012	3 35/64	2 51/64	3/8	21/32	25/64	2 5/8	1 5/64	0.9843	0.276	5/16	AS204-012
25	ASFD205	95	76	9.5	17	10	71	29	27	7.5	M8	AS205
13/16	ASFD205-013											AS205-013
7/8	ASFD205-014	3 3/4	2 63/64	3/8	21/32	25/64	2 25/32	1 9/64	1.0630	0.295	5/16	AS205-014
15/16	ASFD205-015											AS205-015
1	ASFD205-100											AS205-100
30	ASFD206	113	90	12	21	12	84	33	29	8	M10	AS206
1 1/16	ASFD206-101											AS206-101
1 1/8	ASFD206-102	4 7/16	3 35/64	15/32	13/16	15/32	3 5/16	1 19/64	1.1417	0.315	3/8	AS206-102
1 3/16	ASFD206-103											AS206-103
1 1/4	ASFD206-104											AS206-104
35	ASFD207	125	100	12.5	22	12	94	38	34	8.5	M10	AS207
1 1/4	ASFD207-104											AS207-104
1 5/16	ASFD207-105	4 29/32	3 15/16	31/64	7/8	15/32	3 11/16	1 1/2	1.3386	0.335	3/8	AS207-105
1 3/8	ASFD207-106											AS207-106
1 7/16	ASFD207-107											AS207-107
40	ASFD208	148	119	14.5	25	13.5	104	43.5	38	9	M12	AS208
1 1/2	ASFD208-108	5 53/64	4 11/16	37/64	31/32	17/32	4 3/32	1 23/32	1.4961	0.354	7/16	AS208-108
1 9/16	ASFD208-109											AS208-109

Remarks: 1) If relubricatable type is needed, please order with prefix "A-" and suffix "D1".
Example: A-ASFD201D1

Housing[1)] number	Mass of unit kg	lb
FD201	0.3	
FD201		0.7
FD201	0.3	
FD201		0.7
FD201		
FD201	0.3	
FD201		0.7
FD204	0.4	
FD204		0.9
FD205	0.5	
FD205		
FD205		1.1
FD205		
FD205		
FD206	0.8	
FD206		
FD206		1.8
FD206		
FD206		
FD207	0.9	
FD207		
FD207		2.0
FD207		
FD207		
FD208	1.3	
FD208		2.9
FD208		

Rhombus flanged units ductile cast housing (Ductile series)
Set screw type

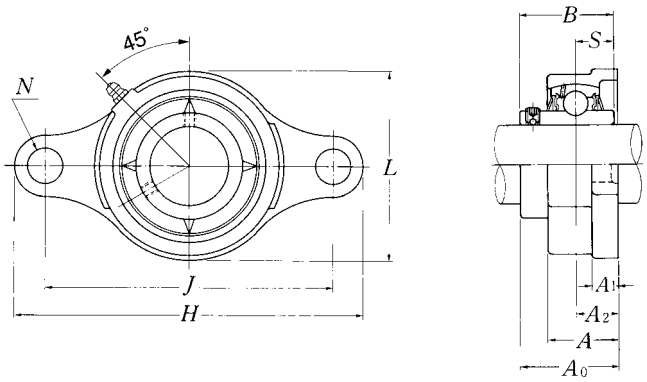

Shaft dia. mm	Unit number [1]	Nominal dimensions mm										Bolt size mm	Bearing number
		H	J	A_2	A_1	A	N	L	A_0	B	S		
12	**UCFE201D1**	112	90	15	10	25	12	57	33.3	31	12.7	M10	UC201D1
15	**UCFE202D1**	112	90	15	10	25	12	57	33.3	31	12.7	M10	UC202D1
17	**UCFE203D1**	112	90	15	10	25	12	57	33.3	31	12.7	M10	UC203D1
20	**UCFE204D1**	112	90	15	10	25	12	57	33.3	31	12.7	M10	UC204D1
25	**UCFE205D1**	127	99	16	10	26	16	62	35.8	34.1	14.3	M14	UC205D1
30	**UCFE206D1**	145	117	18	10	30	16	73	40.2	38.1	15.9	M14	UC206D1
35	**UCFE207D1**	158	130	19	12	32	16	86	44.4	42.9	17.5	M14	UC207D1
40	**UCFE208D1**	172	144	21	12	35	16	95	51.2	49.2	19	M14	UC208D1
45	**UCFE209D1**	180	148	22	13	36	19	101	52.2	49.2	19	M16	UC209D1
50	**UCFE210D1**	189	157	22	13	37	19	106	54.6	51.6	19	M16	UC210D1
55	**UCFE211D1**	216	184	25	18	41	19	118	58.4	55.6	22.2	M16	UC211D1
60	**UCFE212D1**	241	202	29	18	46	23	129	68.7	65.1	25.4	M20	UC212D1

Remarks: 1) These numbers indicate relubricatable type. If maintenance free type is needed, please order without suffix "D1".
Note: Please refer to page 36 for size of grease fitting.

Housing[1)] number	Mass of unit kg
FE204D1	0.4
FE204D1	0.4
FE204D1	0.4
FE204D1	0.4
FE205D1	0.4
FE206D1	0.6
FE207D1	0.9
FE208D1	1.2
FE209D1	1.3
FE210D1	1.5
FE211D1	2.1
FE212D1	2.8

Round flanged units pressed steel housing
Set screw type

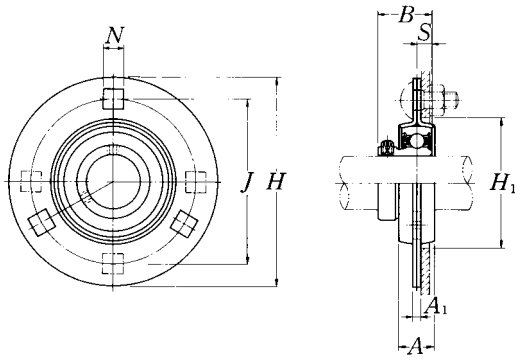

Shaft dia. mm / inch	Unit number	Nominal dimensions mm / inch: H	J	A1	N1)	A	B	S	H1 min.	Bolt size mm / inch	Max. load recommended N radial	lbf axial	Bearing number
12	ASPF201	81	63.5	4	7.1	14	22	6	49	M6	2 700	1 350	AS201
1/2	ASPF201-008	3 3/16	2 1/2	0.157	9/32	9/16	0.8661	0.236	1 59/64	1/4	600	300	AS201-008
15	ASPF202	81	63.5	4	7.1	14	22	6	49	M6	2 700	1 350	AS202
9/16	ASPF202-009	3 3/16	2 1/2	0.157	9/32	9/16	0.8661	0.236	1 59/64	1/4	600	300	AS202-009
5/8	ASPF202-010												AS202-010
17	ASPF203	81	63.5	4	7.1	14	22	6	49	M6	2 700	1 350	AS203
11/16	ASPF203-011	3 3/16	2 1/2	0.157	9/32	9/16	0.8661	0.236	1 59/64	1/4	600	300	AS203-011
20	ASPF204	90	71.5	4	9	16	25	7	56	M8	3 000	1 500	AS204
3/4	ASPF204-012	3 35/64	2 13/16	0.157	23/64	5/8	0.9843	0.276	2 13/64	5/16	660	330	AS204-012
25	ASPF205	95	76	4	9	18	27	7.5	60	M8	4 000	2 000	AS205
13/16	ASPF205-013												AS205-013
7/8	ASPF205-014	3 3/4	2 63/64	0.157	23/64	23/32	1.0630	0.295	2 23/64	5/16	880	440	AS205-014
15/16	ASPF205-015												AS205-015
1	ASPF205-100												AS205-100
30	ASPF206	113	90.5	5.2	11	18	29	8	71	M10	5 000	2 500	AS206
1 1/16	ASPF206-101												AS206-101
1 1/8	ASPF206-102	4 7/16	3 9/16	0.205	7/16	23/32	1.1417	0.315	2 51/64	3/8	1 100	550	AS206-102
1 3/16	ASPF206-103												AS206-103
1 1/4	ASPF206-104												AS206-104
35	ASPF207	122	100	5.2	11	20	34	8.5	81	M10	6 000	3 000	AS207
1 1/4	ASPF207-104												AS207-104
1 5/16	ASPF207-105	4 13/16	3 15/16	0.205	7/16	25/32	1.3386	0.335	3 3/16	3/8	1 300	650	AS207-105
1 3/8	ASPF207-106												AS207-106
1 7/16	ASPF207-107												AS207-107
40	ASPF208	148	119	6.8	13.5	21	38	9	91	M12	7 000	3 500	AS208
1 1/2	ASPF208-108	5 13/16	4 11/16	0.268	17/32	13/16	1.4961	0.354	3 37/64	1/2	1 500	750	AS208-108
1 9/16	ASPF208-109												AS208-109

Remarks: 1) ASPF208 has four bolt holes.
2) The permissible load only applies in applications where the load is stable and the speed is 2400 min^{-1} or less.

Housing number	Mass of unit kg lb
PF203 PF203	0.2 0.4
PF203 PF203 PF203	0.2 0.4
PF203 PF203	0.2 0.4
PF204 PF204	0.2 0.4
PF205 PF205 PF205 PF205 PF205	0.3 0.7
PF206 PF206 PF206 PF206 PF206	0.4 0.9
PF207 PF207 PF207 PF207 PF207	0.6 1.3
PF208 PF208 PF208	0.9 2.0

Round flanged units pressed steel housing with rubber ring
Set screw type

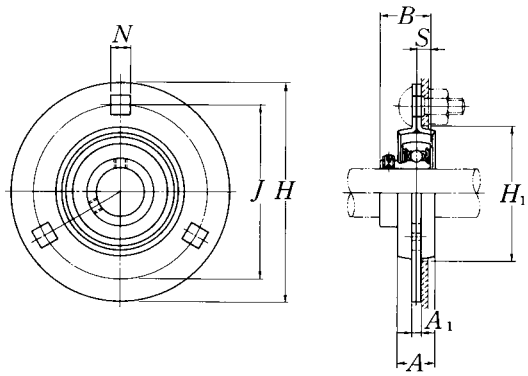

Shaft dia. mm / inch	Unit number	Nominal dimensions mm / inch: H	J	A1	N	A	B	S	H1 min.	Bolt size mm / inch	Max. load recommended N radial	lbf axial	Bearing number
12	**ASRPF201**	90	71.5	4	9	16	22	6	56	M 8	1 000	200	AS201
1/2	**ASRPF201-008**	3 17/32	2 13/16	0.157	2 3/64	5/8	0.8661	0.236	2 13/64	5/16	220	40	AS201-008
15	**ASRPF202**	90	71.5	4	9	16	22	6	56	M 8	1 000	200	AS202
9/16	**ASRPF202-009**	3 17/32	2 13/16	0.157	23/64	5/8	0.8661	0.236	2 13/64	5/16	220	40	AS202-009
5/8	**ASRPF202-010**												AS202-010
17	**ASRPF203**	90	71.5	4	9	16	22	6	56	M 8	1 000	200	AS203
11/16	**ASRPF203-011**	3 17/32	2 13/16	0.157	23/64	5/8	0.8661	0.236	2 13/64	5/16	220	40	AS203-011
20	**ASRPF204**	95	76	4	9	18	25	7	60	M 8	1 150	200	AS204
3/4	**ASRPF204-012**	3 3/4	2 63/64	0.157	23/64	23/32	0.9843	0.276	2 23/64	5/16	250	40	AS204-012
25	**ASRPF205**	113	90.5	5.2	11	18	27	7.5	71	M10	1 300	200	AS205
13/16	**ASRPF205-013**												AS205-013
7/8	**ASRPF205-014**	4 7/16	3 9/16	0.205	7/16	23/32	1.0630	0.295	2 51/64	3/8	280	40	AS205-014
15/16	**ASRPF205-015**												AS205-015
1	**ASRPF205-100**												AS205-100
30	**ASRPF206**	122	100	5.2	11	20	29	8	81	M10	1 500	200	AS206
1 1/16	**ASRPF206-101**												AS206-101
1 1/8	**ASRPF206-102**	4 13/16	3 15/16	0.205	7/16	25/32	1.1417	0.315	3 3/16	3/8	330	40	AS206-102
1 3/16	**ASRPF206-103**												AS206-103
1 1/4	**ASRPF206-104**												AS206-104

Remarks: 1) The permissible load only applies in applications where the load is stable and the speed is 2400 min^{-1} or less.
2) When an anti-vibration rubber ring is used, the self alignment capability will be reduce.

Housing number		Mass of unit
		kg lb
rubber ring	steel	
R201	PF204	0.2
R201	PF204	0.4
R201	PF204	0.2
R201	PF204	0.4
R201	PF204	
R201	PF204	0.2
R201	PF204	0.4
R204	PF205	0.2
R204	PF205	0.4
R205	PF206	0.3
R205	PF206	
R205	PF206	0.7
R205	PF206	
R205	PF206	
R206	PF207	0.5
R206	PF207	
R206	PF207	1.1
R206	PF207	
R206	PF207	

Rhombus flanged units pressed steel housing
Set screw type

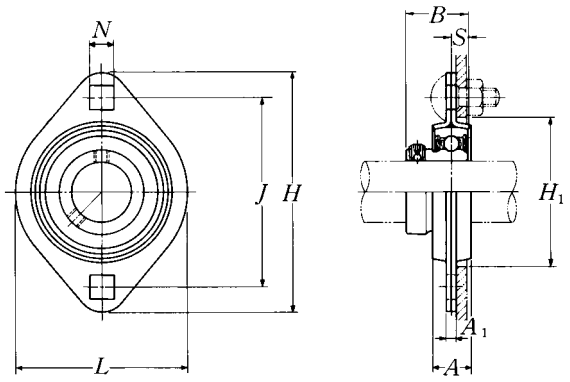

Shaft dia. mm / inch	Unit number	Nominal dimensions mm / inch: H	J	A1	N	A	L	B	S	H1 min.	Bolt size mm / inch	Max. load recommended N radial	lbf axial	Bearing number
12	ASPFL201	81	63.5	4	7.1	14	59	22	6	49	M 6	2 700	1 350	AS201
1/2	ASPFL201-008	3 3/16	2 1/2	0.157	9/32	9/16	2 5/16	0.8661	0.236	1 59/64	1/4	600	300	AS201-008
15	ASPFL202	81	63.5	4	7.1	14	59	22	6	49	M 6	2 700	1 350	AS202
9/16	ASPFL202-009	3 3/16	2 1/2	0.157	9/32	9/16	2 5/16	0.8661	0.236	1 59/64	1/4	600	300	AS202-009
5/8	ASPFL202-010													AS202-010
17	ASPFL203	81	63.5	4	7.1	14	59	22	6	49	M 6	2 700	1 350	AS203
11/16	ASPFL203-011	3 3/16	2 1/2	0.157	9/32	9/16	2 5/16	0.8661	0.236	1 59/64	1/4	600	300	AS203-011
20	ASPFL204	90	71.5	4	9	16	67	25	7	56	M 8	3 000	1 500	AS204
3/4	ASPFL204-012	3 17/32	2 13/16	0.157	23/64	5/8	2 5/8	0.9843	0.276	2 13/64	5/16	660	330	AS204-012
25	ASPFL205	95	76	4	9	18	71	27	7.5	60	M 8	4 000	2 000	AS205
13/16	ASPFL205-013													AS205-013
7/8	ASPFL205-014	3 3/4	2 63/64	0.157	23/64	23/32	2 25/32	1.0630	0.295	2 23/64	5/16	880	440	AS205-014
15/16	ASPFL205-015													AS205-015
1	ASPFL205-100													AS205-100
30	ASPFL206	113	90.5	5.2	11	18	84	29	8	71	M10	5 000	2 500	AS206
1 1/16	ASPFL206-101													AS206-101
1 1/8	ASPFL206-102	4 7/16	3 9/16	0.205	7/16	23/32	3 5/16	1.1417	0.315	2 51/64	3/8	1 100	550	AS206-102
1 3/16	ASPFL206-103													AS206-103
1 1/4	ASPFL206-104													AS206-104
35	ASPFL207	122	100	5.2	11	20	94	34	8.5	81	M10	6 000	3 000	AS207
1 1/4	ASPFL207-104													AS207-104
1 5/16	ASPFL207-105	4 13/16	3 15/16	0.205	7/16	25/32	3 11/16	1.3386	0.335	3 3/16	3/8	1 300	650	AS207-105
1 3/8	ASPFL207-106													AS207-106
1 7/16	ASPFL207-107													AS207-107
40	ASPFL208	148	119	6.8	13.5	21	100	38	9	91	M12	6 000	3 000	AS208
1 1/2	ASPFL208-108	5 53/64	4 11/16	0.268	17/32	53/64	3 15/16	1.4961	0.354	3 37/64	1/2	1 300	650	AS208-108
1 9/16	ASPFL208-109													AS208-109

Remarks: 1) The permissible load only applies in applications where the load is stable and the speed is 2400 min^{-1} or less.

Housing number	Mass of unit kg	lb
PFL203	0.2	
PFL203	0.4	
PFL203	0.2	
PFL203	0.4	
PFL203		
PFL203	0.2	
PFL203	0.4	
PFL204	0.2	
PFL204	0.4	
PFL205	0.3	
PFL205		
PFL205	0.7	
PFL205		
PFL205		
PFL206	0.4	
PFL206		
PFL206	0.9	
PFL206		
PFL206		
PFL207	0.6	
PFL207		
PFL207	1.3	
PFL207		
PFL207		
PFL208	0.8	
PFL208	1.4	
PFL208		

Hanger units cast housing
Set screw type

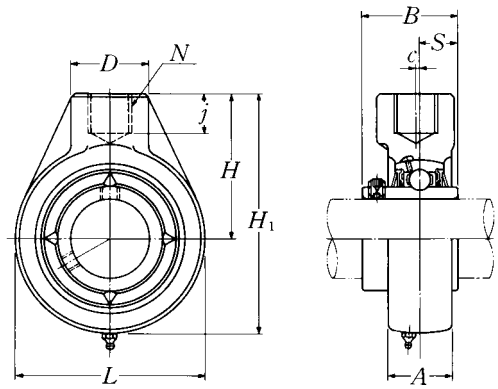

Shaft dia. mm / inch	Unit number [1]	Nominal dimensions L	H1	c	A	H (mm / inch)	N	D	j	B	S	Bearing number
12	UCHB201D1	64	96	0	21	64	RP3/4	40	19	31	12.7	UC201D1
1/2	UCHB201-008D1	2 17/32	3 25/32	0	13/16	2 33/64	RP3/4	1 9/16	3/4	1.2205	0.500	UC201-008D1
15	UCHB202D1	64	96	0	21	64	RP3/4	40	19	31	12.7	UC202D1
9/16	UCHB202-009D1	2 17/32	3 25/32	0	13/16	2 33/64	RP3/4	1 9/16	3/4	1.2205	0.500	UC202-009D1
5/8	UCHB202-010D1											UC202-010D1
17	UCHB203D1	64	96	0	21	64	RP3/4	40	19	31	12.7	UC203D1
11/16	UCHB203-011D1	2 17/32	3 25/32	0	13/16	2 33/64	RP3/4	1 9/16	3/4	1.2205	0.500	UC203-011D1
20	UCHB204D1	64	96	0	21	64	RP3/4	40	19	31	12.7	UC204D1
3/4	UCHB204-012D1	2 17/32	3 25/32	0	13/16	2 33/64	RP3/4	1 9/16	3/4	1.2205	0.500	UC204-012D1
25	UCHB205D1	78	103	0	24	64	RP3/4	40	19	34.1	14.3	UC205D1
13/16	UCHB205-013D1											UC205-013D1
7/8	UCHB205-014D1	3 1/16	4 1/16	0	15/16	2 33/64	RP3/4	1 9/16	3/4	1.3425	0.563	UC205-014D1
15/16	UCHB205-015D1											UC205-015D1
1	UCHB205-100D1											UC205-100D1
30	UCHB206D1	78	103	0	28	64	RP3/4	40	19	38.1	15.9	UC206D1
1 1/16	UCHB206-101D1											UC206-101D1
1 1/8	UCHB206-102D1	3 1/16	4 1/16	0	1 3/32	2 33/64	RP3/4	1 9/16	3/4	1.5000	0.626	UC206-102D1
1 3/16	UCHB206-103D1											UC206-103D1
1 1/4	UCHB206-104D1											UC206-104D1
35	UCHB207D1	92	116	0	30	70	RP3/4	40	19	42.9	17.5	UC207D1
1 1/4	UCHB207-104D1											UC207-104D1
1 5/16	UCHB207-105D1	3 5/8	4 9/16	0	1 3/16	2 3/4	RP3/4	1 9/16	3/4	1.6890	0.689	UC207-105D1
1 3/8	UCHB207-106D1											UC207-106D1
1 7/16	UCHB207-107D1											UC207-107D1
40	UCHB208D1	96	121	2	33	73	RP3/4	40	19	49.2	19	UC208D1
1 1/2	UCHB208-108D1	3 25/32	4 3/4	3/32	1 5/16	2 7/8	RP3/4	1 9/16	3/4	1.9370	0.748	UC208-108D1
1 9/16	UCHB208-109D1											UC208-109D1
45	UCHB209D1	108	136	5	35	82	RP1	48	21	49.2	19	UC209D1
1 5/8	UCHB209-110D1											UC209-110D1
1 11/16	UCHB209-111D1	4 1/4	5 11/32	3/16	1 3/8	3 15/64	RP1	1 7/8	13/16	1.9370	0.748	UC209-111D1
1 3/4	UCHB209-112D1											UC209-112D1

Remarks: 1) These numbers indicate relubricatable type. If maintenance free type is needed, please order without suffix "D1".
Note: Please refer to page 36 for size of grease fitting.

Housing [1)] number	Mass of unit kg	lb
HB204D1	1.0	
HB204D1	2.2	
HB204D1	0.9	
HB204D1	2.0	
HB204D1		
HB204D1	0.9	
HB204D1	2.0	
HB204D1	0.9	
HB204D1	2.0	
HB205D1	0.9	
HB205D1		
HB205D1	2.0	
HB205D1		
HB205D1		
HB206D1	0.8	
HB206D1		
HB206D1	1.8	
HB206D1		
HB206D1		
HB207D1	1.2	
HB207D1		
HB207D1	2.7	
HB207D1		
HB207D1		
HB208D1	1.3	
HB208D1	2.9	
HB208D1		
HB209D1	1.8	
HB209D1		
HB209D1	4.0	
HB209D1		

Nominal Designation of Thread	Nominal dimensions mm		
	Major Diameter of Internal Thread	Pitch Diameter	Minor Diameter of Internal Thread
Rp3/4 (PS3/4)	26.441	25.279	24.117
Rp1(PS1)	33.249	31.770	30.291
Rp1 1/4 (PS1 1/4)	41.910	40.431	38.952
Rp1 1/2 (PS1 1/2)	47.803	46.324	44.845

Hanger units cast housing
Set screw type

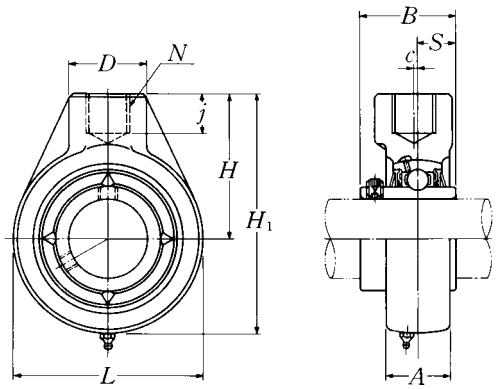

Shaft dia. mm / inch	Unit number [1]	Nominal dimensions L	H1	c	A	H (mm)	N (inch)	D	j	B	S	Bearing number
50	UCHB210D1	118	142	5	37	83	RP1	48	21	51.6	19	UC210D1
1 13/16	UCHB210-113D1											UC210-113D1
1 7/8	UCHB210-114D1	4 21/32	5 19/32	3/16	1 15/32	3 17/64	RP1	1 7/8	13/16	2.0315	0.748	UC210-114D1
1 15/16	UCHB210-115D1											UC210-115D1
2	UCHB210-200D1											UC210-200D1
55	UCHB211D1	126	158	7	38	95	RP1 1/4	60	25	55.6	22.2	UC211D1
2	UCHB211-200D1											UC211-200D1
2 1/16	UCHB211-201D1	4 31/32	6 7/32	9/32	1 1/2	3 47/64	RP1 1/4	2 3/8	31/32	2.1890	0.874	UC211-201D1
2 1/8	UCHB211-202D1											UC211-202D1
2 3/16	UCHB211-203D1											UC211-203D1
60	UCHB212D1	142	173	9	42	102	RP1 1/4	60	28	65.1	25.4	UC212D1
2 1/4	UCHB212-204D1											UC212-204D1
2 5/16	UCHB212-205D1	5 19/32	6 13/16	11/32	1 21/32	4 1/64	RP1 1/4	2 3/8	1 3/32	2.5630	1.000	UC212-205D1
2 3/8	UCHB212-206D1											UC212-206D1
2 7/16	UCHB212-207D1											UC212-207D1
65	UCHB213D1	166	200	9.5	44	117	RP1 1/2	70	32	65.1	25.4	UC213D1
2 1/2	UCHB213-208D1	6 17/32	7 7/8	3/8	1 23/32	4 39/64	RP1 1/2	2 3/4	1 1/4	2.5630	1.000	UC213-208D1

Remarks: 1) These numbers indicate relubricatable type. If maintenance free type is needed, please order without suffix "D1".
Note: Please refer to page 36 for size of grease fitting.

Housing [1)] number	Mass of unit kg	lb
HB210D1	2.2	
HB210D1		
HB210D1	4.9	
HB210D1		
HB210D1		
HB211D1	2.8	
HB211D1		
HB211D1	6.2	
HB211D1		
HB211D1		
HB212D1	3.7	
HB212D1		
HB212D1	8.2	
HB212D1		
HB212D1		
HB213D1	5.7	
HB213D1	12.6	

Nominal Designation of Thread	Nominal dimensions mm		
	Major Diameter of Internal Thread	Pitch Diameter	Minor Diameter of Internal Thread
Rp3/4 (PS3/4)	26.441	25.279	24.117
Rp1(PS1)	33.249	31.770	30.291
Rp1 1/4 (PS1 1/4)	41.910	40.431	38.952
Rp1 1/2 (PS1 1/2)	47.803	46.324	44.845

Take-up units cast housing
Set screw type

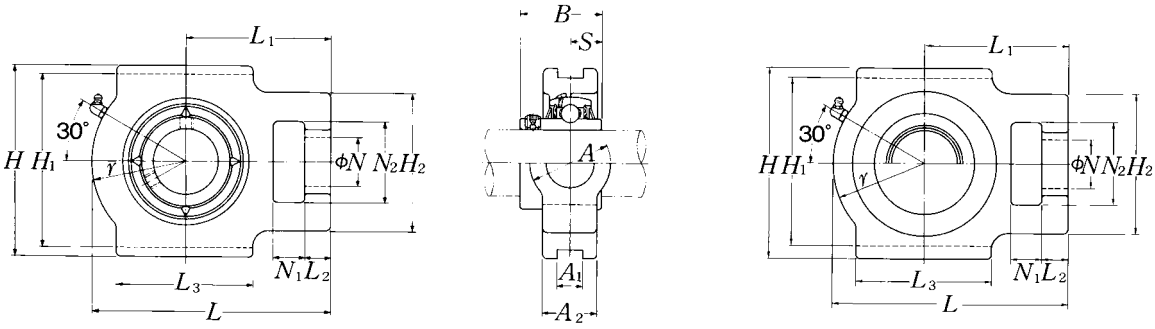

Pressed steel dust cover type
Open end: **S-UCT···D1**
Closed end: **SM-UCT···D1**

Shaft dia. mm / inch	Unit number [1]	Nominal dimensions (mm / inch) N_1	L_2	H_2	N_2	N	L_3	A_1	H_1	H	L	A_2	A	r	L_1	B	S
12	UCT201D1	16	12	51	32	19	51	12	76	89	94	21	32	33	61	31	12.7
1/2	UCT201-008D1	5/8	15/32	2	1 1/4	3/4	2	0.472	2 63/64	3 1/2	3 11/16	13/16	1 1/4	1 5/16	2 13/32	1.2205	0.500
15	UCT202D1	16	12	51	32	19	51	12	76	89	94	21	32	33	61	31	12.7
9/16	UCT202-009D1	5/8	15/32	2	1 1/4	3/4	2	0.472	2 63/64	3 1/2	3 11/16	13/16	1 1/4	1 5/16	2 13/32	1.2205	0.500
5/8	UCT202-010D1																
17	UCT203D1	16	12	51	32	19	51	12	76	89	94	21	32	33	61	31	12.7
11/16	UCT203-011D1	5/8	15/32	2	1 1/4	3/4	2	0.472	2 63/64	3 1/2	3 11/16	13/16	1 1/4	1 5/16	2 13/32	1.2205	0.500
20	UCT204D1	16	12	51	32	19	51	12	76	89	94	21	32	33	61	31	12.7
3/4	UCT204-012D1	5/8	15/32	2	1 1/4	3/4	2	0.472	2 63/64	3 1/2	3 11/16	13/16	1 1/4	1 5/16	2 13/32	1.2205	0.500
25	UCT205D1	16	12	51	32	19	51	12	76	89	97	24	32	35	62	34.1	14.3
13/16	UCT205-013D1																
7/8	UCT205-014D1	5/8	15/32	2	1 1/4	3/4	2	0.472	2 63/64	3 1/2	3 13/16	15/16	1 1/4	1 3/8	2 7/16	1.3425	0.563
15/16	UCT205-015D1																
1	UCT205-100D1																
30	UCT206D1	16	12	56	37	22	57	12	89	102	113	28	37	43	70	38.1	15.9
1 1/16	UCT206-101D1																
1 1/8	UCT206-102D1	5/8	15/32	2 7/32	1 15/32	7/8	2 1/4	0.472	3 1/2	4 1/32	4 7/16	1 3/32	1 15/32	1 11/16	2 3/4	1.5000	0.626
1 3/16	UCT206-103D1																
1 1/4	UCT206-104D1																
35	UCT207D1	16	15	64	37	22	64	12	89	102	129	30	37	51	78	42.9	17.5
1 1/4	UCT207-104D1																
1 5/16	UCT207-105D1	5/8	19/32	2 17/32	1 15/32	7/8	2 17/32	0.472	3 1/2	4 1/32	5 3/32	1 3/16	1 15/32	2	3 1/16	1.6890	0.689
1 3/8	UCT207-106D1																
1 7/16	UCT207-107D1																
40	UCT208D1	19	18	83	49	29	83	16	102	114	144	33	49	56	88	49.2	19
1 1/2	UCT208-108D1	3/4	23/32	3 9/32	1 15/16	1 5/32	3 9/32	0.630	4 1/64	4 1/2	5 21/32	1 5/16	1 15/16	2 7/32	3 15/32	1.9370	0.748
1 9/16	UCT208-109D1																
45	UCT209D1	19	18	83	49	29	83	16	102	117	145	35	49	57	88	49.2	19
1 5/8	UCT209-110D1																
1 11/16	UCT209-111D1	3/4	23/32	3 9/32	1 15/16	1 5/32	3 9/32	0.630	4 1/64	4 19/32	5 23/32	1 3/8	1 15/16	2 1/4	3 15/32	1.9370	0.748
1 3/4	UCT209-112D1																

Remarks: 1) These numbers indicate relubricatable type. If maintenance free type is needed, please order without suffix "D1".
Note: Please refer to page 36 for size of grease fitting.

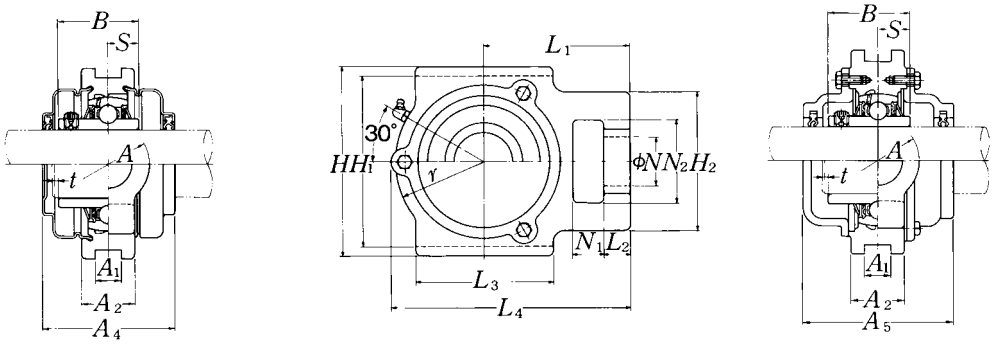

Cast dust cover type
Open end: **C-UCT···D1**
Closed end: **CM-UCT···D1**

Bearing number	Housing number [1]	Unit number [1] pressed steel dust cover type	Unit number [1] cast dust cover type	Nominal dimensions mm / inch: t max.	A_4	L_4	A_5	Mass of unit kg / lb: UCT	S(SM)	C(CM)
UC201D1	T204D1	S(SM)-UCT201D1	C(CM)-UCT201D1	2	51	97	62	0.6	0.8	1.1
UC201-008D1	T204D1	S(SM)-UCT201-008D1	C(CM)-UCT201-008D1	5/64	2	3 13/16	2 7/16	1.3	1.8	2.4
UC202D1	T204D1	S(SM)-UCT202D1	C(CM)-UCT202D1	2	51	97	62	0.6	0.8	1.1
UC202-009D1	T204D1	S(SM)-UCT202-009D1	C(CM)-UCT202-009D1	5/64	2	3 13/16	2 7/16	1.3	1.8	2.4
UC202-010D1	T204D1	S(SM)-UCT202-010D1	C(CM)-UCT202-010D1							
UC203D1	T204D1	S(SM)-UCT203D1	C(CM)-UCT203D1	2	51	97	62	0.6	0.8	1.0
UC203-011D1	T204D1	S(SM)-UCT203-011D1	C(CM)-UCT203-011D1	5/64	2	3 13/16	2 7/16	1.3	1.8	2.2
UC204D1	T204D1	S(SM)-UCT204D1	C(CM)-UCT204D1	2	51	97	62	0.6	0.8	1.0
UC204-012D1	T204D1	S(SM)-UCT204-012D1	C(CM)-UCT204-012D1	5/64	2	3 13/16	2 7/16	1.3	1.8	2.2
UC205D1	T205D1	S(SM)-UCT205D1	C(CM)-UCT205D1	2	57	100.5	70	0.8	0.9	1.1
UC205-013D1	T205D1	S(SM)-UCT205-013D1	C(CM)-UCT205-013D1							
UC205-014D1	T205D1	S(SM)-UCT205-014D1	C(CM)-UCT205-014D1	5/64	2 1/4	3 31/32	2 3/4	1.8	2.0	2.4
UC205-015D1	T205D1	S(SM)-UCT205-015D1	C(CM)-UCT205-015D1							
UC205-100D1	T205D1	S(SM)-UCT205-100D1	C(CM)-UCT205-100D1							
UC206D1	T206D1	S(SM)-UCT206D1	C(CM)-UCT206D1	2	62	113.5	75	1.3	1.3	1.7
UC206-101D1	T206D1	S(SM)-UCT206-101D1	C(CM)-UCT206-101D1							
UC206-102D1	T206D1	S(SM)-UCT206-102D1	C(CM)-UCT206-102D1	5/64	2 7/16	4 15/32	2 15/16	2.9	2.9	3.8
UC206-103D1	T206D1	S(SM)-UCT206-103D1	C(CM)-UCT206-103D1							
UC206-104D1	T206D1	S(SM)-UCT206-104D1	C(CM)-UCT206-104D1							
UC207D1	T207D1	S(SM)-UCT207D1	C(CM)-UCT207D1	3	72	129	80	1.6	1.7	2.1
UC207-104D1	T207D1	S(SM)-UCT207-104D1	C(CM)-UCT207-104D1							
UC207-105D1	T207D1	S(SM)-UCT207-105D1	C(CM)-UCT207-105D1	1/8	2 27/32	5 3/32	3 5/32	3.5	3.7	4.6
UC207-106D1	T207D1	S(SM)-UCT207-106D1	C(CM)-UCT207-106D1							
UC207-107D1	T207D1	S(SM)-UCT207-107D1	C(CM)-UCT207-107D1							
UC208D1	T208D1	S(SM)-UCT208D1	C(CM)-UCT208D1	3	82	144	90	2.4	2.5	3.1
UC208-108D1	T208D1	S(SM)-UCT208-108D1	C(CM)-UCT208-108D1	1/8	3 7/32	5 21/32	3 17/32	5.3	5.5	6.8
UC208-109D1	T208D1	S(SM)-UCT208-109D1	C(CM)-UCT208-109D1							
UC209D1	T209D1	S(SM)-UCT209D1	C(CM)-UCT209D1	3	82	145.5	95	2.4	2.5	3.3
UC209-110D1	T209D1	S(SM)-UCT209-110D1	C(CM)-UCT209-110D1							
UC209-111D1	T209D1	S(SM)-UCT209-111D1	C(CM)-UCT209-111D1	1/8	3 7/32	5 23/32	3 3/4	5.3	5.5	7.3
UC209-112D1	T209D1	S(SM)-UCT209-112D1	C(CM)-UCT209-112D1							

Take-up units cast housing
Set screw type

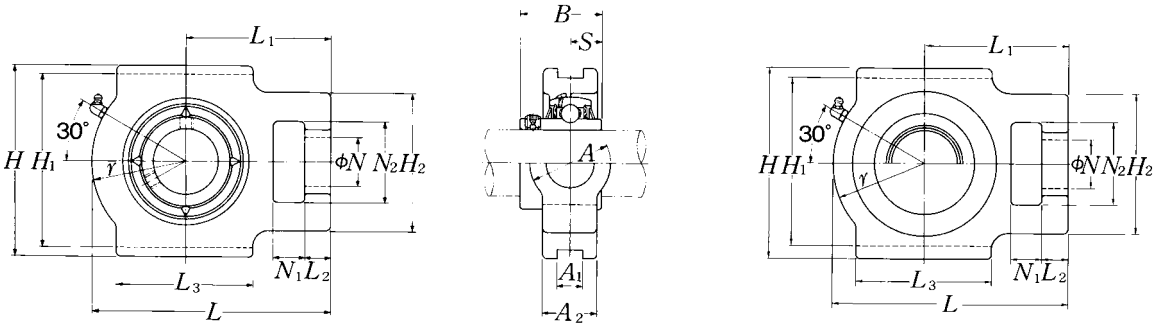

Pressed steel dust cover type
Open end: **S-UCT···D1**
Closed end: **SM-UCT···D1**

Shaft dia. mm / inch	Unit number [1]	Nominal dimensions (mm / inch) N_1	L_2	H_2	N_2	N	L_3	A_1	H_1	H	L	A_2	A	r	L_1	B	S
50	**UCT210D1**	19	18	83	49	29	86	16	102	117	151	37	49	59	92	51.6	19
1 13/16	**UCT210-113D1**																
1 7/8	**UCT210-114D1**	3/4	23/32	3 9/32	1 15/16	1 5/32	3 3/8	0.630	4 1/64	4 19/32	5 15/16	1 15/32	1 15/16	2 5/16	3 5/8	2.0315	0.748
1 15/16	**UCT210-115D1**																
2	**UCT210-200D1**																
55	**UCT211D1**	25	21	102	64	35	95	22	130	146	171	38	64	65	106	55.6	22.2
2	**UCT211-200D1**																
2 1/16	**UCT211-201D1**	31/32	13/16	4 1/32	2 17/32	1 3/8	3 3/4	0.866	5 1/8	5 3/4	6 23/32	1 1/2	2 17/32	2 9/16	4 3/16	2.1890	0.874
2 1/8	**UCT211-202D1**																
2 3/16	**UCT211-203D1**																
60	**UCT212D1**	32	21	102	64	35	102	22	130	146	194	42	64	75	119	65.1	25.4
2 1/4	**UCT212-204D1**																
2 5/16	**UCT212-205D1**	1 1/4	13/16	4 1/32	2 17/32	1 3/8	4 1/32	0.866	5 1/8	5 3/4	7 5/8	1 21/32	2 17/32	2 15/16	4 11/16	2.5630	1.000
2 3/8	**UCT212-206D1**																
2 7/16	**UCT212-207D1**																
65	**UCT213D1**	32	23	111	70	41	121	26	151	167	224	44	70	87	137	65.1	25.4
2 1/2	**UCT213-208D1**	1 1/4	29/32	4 3/8	2 3/4	1 5/8	4 3/4	1.024	5 15/16	6 9/16	8 13/16	1 23/32	2 3/4	3 7/16	5 13/32	2.5630	1.000
2 9/16	**UCT213-209D1**																
70	**UCT214D1**	32	23	111	70	41	121	26	151	167	224	46	70	87	137	74.6	30.2
2 5/8	**UCT214-210D1**																
2 11/16	**UCT214-211D1**	1 1/4	29/32	4 3/8	2 3/4	1 5/8	4 3/4	1.024	5 15/16	6 9/16	8 13/16	1 13/16	2 3/4	3 7/16	5 13/32	2.9370	1.189
2 3/4	**UCT214-212D1**																
75	**UCT215D1**	32	23	111	70	41	121	26	151	167	232	48	70	92	140	77.8	33.3
2 13/16	**UCT215-213D1**																
2 7/8	**UCT215-214D1**	1 1/4	29/32	4 3/8	2 3/4	1 5/8	4 3/4	1.024	5 15/16	6 9/16	9 1/8	1 7/8	2 3/4	3 5/8	5 1/2	3.0630	1.311
2 15/16	**UCT215-215D1**																
3	**UCT215-300D1**																
80	**UCT216D1**	32	23	111	70	41	121	26	165	184	235	51	70	95	140	82.6	33.3
3 1/16	**UCT216-301D1**																
3 1/8	**UCT216-302D1**	1 1/4	29/32	4 3/8	2 3/4	1 5/8	4 3/4	1.024	6 1/2	7 1/4	9 1/4	2	2 3/4	3 3/4	5 1/2	3.2520	1.311
3 3/16	**UCT216-303D1**																

Remarks: 1) These numbers indicate relubricatable type. If maintenance free type is needed, please order without suffix "D1".
Note: Please refer to page 36 for size of grease fitting.

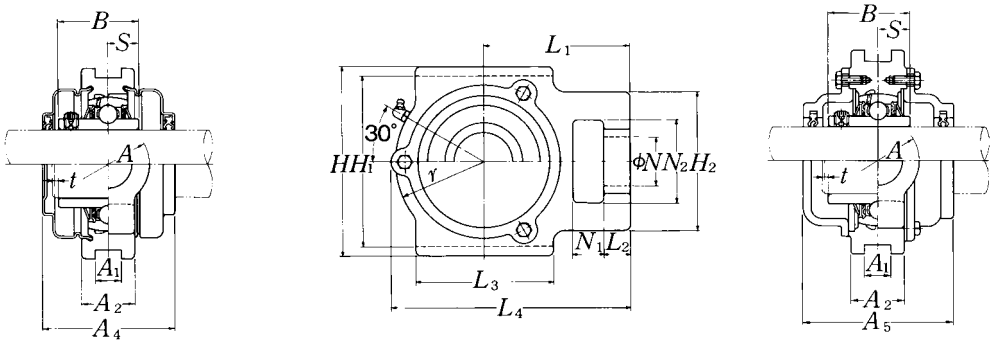

Cast dust cover type
Open end: **C-UCT···D1**
Closed end: **CM-UCT···D1**

Bearing number	Housing [1] number	Unit number [1] pressed steel dust cover type	Unit number [1] cast dust cover type	Nominal dimensions mm / inch: t max.	A_4	L_4	A_5	Mass of unit kg / lb: UCT	S(SM)	C(CM)
UC210D1	T210D1	S(SM)-UCT210D1	C(CM)-UCT210D1	3	87	152	100	2.6	2.7	3.6
UC210-113D1	T210D1	S(SM)-UCT210-113D1	C(CM)-UCT210-113D1							
UC210-114D1	T210D1	S(SM)-UCT210-114D1	C(CM)-UCT210-114D1	1/8	3 7/16	5 31/32	3 15/16	5.7	6.0	7.9
UC210-115D1	T210D1	S(SM)-UCT210-115D1	C(CM)-UCT210-115D1							
UC210-200D1	T210D1	S(SM)-UCT210-200D1	C(CM)-UCT210-200D1							
UC211D1	T211D1	S(SM)-UCT211D1	C(CM)-UCT211D1	4	92	171.5	100	3.9	4.1	5.0
UC211-200D1	T211D1	S(SM)-UCT211-200D1	C(CM)-UCT211-200D1							
UC211-201D1	T211D1	S(SM)-UCT211-201D1	C(CM)-UCT211-201D1	5/32	3 5/8	6 3/4	3 15/16	8.6	9.0	11
UC211-202D1	T211D1	S(SM)-UCT211-202D1	C(CM)-UCT211-202D1							
UC211-203D1	T211D1	S(SM)-UCT211-203D1	C(CM)-UCT211-203D1							
UC212D1	T212D1	S(SM)-UCT212D1	C(CM)-UCT212D1	4	102	194	115	4.8	5.1	6.1
UC212-204D1	T212D1	S(SM)-UCT212-204D1	C(CM)-UCT212-204D1							
UC212-205D1	T212D1	S(SM)-UCT212-205D1	C(CM)-UCT212-205D1	5/32	4 1/32	7 5/8	4 17/32	11	11	13
UC212-206D1	T212D1	S(SM)-UCT212-206D1	C(CM)-UCT212-206D1							
UC212-207D1	T212D1	S(SM)-UCT212-207D1	C(CM)-UCT212-207D1							
UC213D1	T213D1	S(SM)-UCT213D1	C(CM)-UCT213D1	4	107	224	120	7.0	7.3	8.4
UC213-208D1	T213D1	S(SM)-UCT213-208D1	C(CM)-UCT213-208D1	5/32	4 7/32	8 13/16	4 23/32	15	16	19
UC213-209D1	T213D1	S(SM)-UCT213-209D1	C(CM)-UCT213-209D1							
UC214D1	T214D1	—	C(CM)-UCT214D1	4	—	224	135	7.0	—	9.1
UC214-210D1	T214D1		C(CM)-UCT214-210D1							
UC214-211D1	T214D1	—	C(CM)-UCT214-211D1	5/32	—	8 13/16	5 5/16	15	—	20
UC214-212D1	T214D1		C(CM)-UCT214-212D1							
UC215D1	T215D1	—	C(CM)-UCT215D1	4	—	232	135	7.4	—	9.8
UC215-213D1	T215D1		C(CM)-UCT215-213D1							
UC215-214D1	T215D1	—	C(CM)-UCT215-214D1	5/32	—	9 1/8	5 5/16	16	—	22
UC215-215D1	T215D1		C(CM)-UCT215-215D1							
UC215-300D1	T215D1		C(CM)-UCT215-300D1							
UC216D1	T216D1	—	C(CM)-UCT216D1	4	—	235	145	8.2	—	11
UC216-301D1	T216D1		C(CM)-UCT216-301D1							
UC216-302D1	T216D1	—	C(CM)-UCT216-302D1	5/32	—	9 1/4	5 23/32	18	—	24
UC216-303D1	T216D1		C(CM)-UCT216-303D1							

Take-up units cast housing
Set screw type

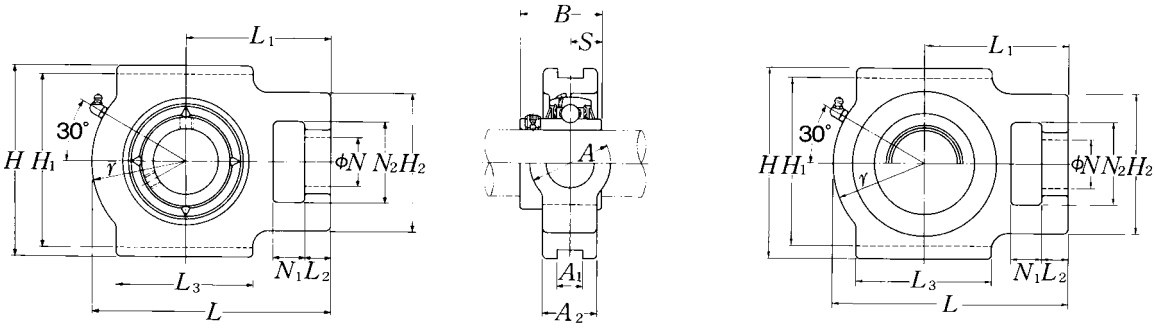

Pressed steel dust cover type
Open end: **S-UCT···D1**
Closed end: **SM-UCT···D1**

Shaft dia. mm / inch	Unit number [1]	Nominal dimensions															
		mm									inch						
		N_1	L_2	H_2	N_2	N	L_3	A_1	H_1	H	L	A_2	A	r	L_1	B	S
85	**UCT217D1**	38	31	124	73	48	157	30	173	198	260	54	73	98	162	85.7	34.1
3 1/4	**UCT217-304D1**																
3 5/16	**UCT217-305D1**	1 1/2	1 7/32	4 7/8	2 7/8	1 7/8	6 3/16	1.181	6 13/16	7 25/32	10 1/4	2 1/8	2 7/8	3 27/32	6 3/8	3.3740	1.343
3 7/16	**UCT217-307D1**																

Remarks: 1) These numbers indicate relubricatable type. If maintenance free type is needed, please order without suffix "D1".
Note: Please refer to page 36 for size of grease fitting.

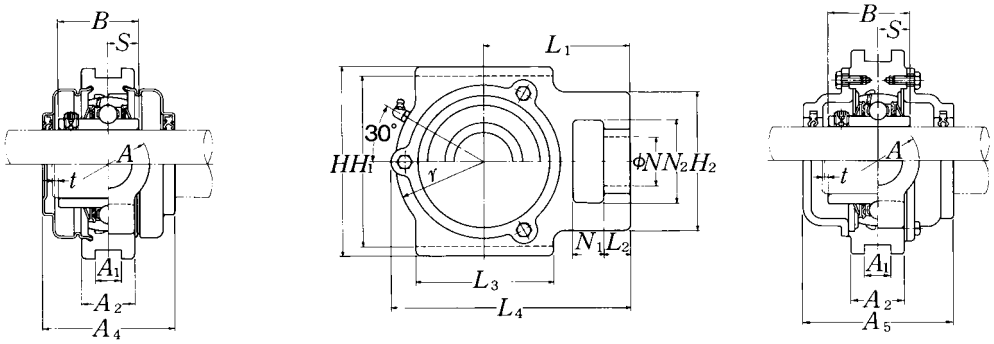

Cast dust cover type
Open end: **C-UCT…D1**
Closed end: **CM-UCT…D1**

Bearing number	Housing number [1)]	Unit number [1)] pressed steel dust cover type	Unit number [1)] cast dust cover type	Nominal dimensions				Mass of unit		
				mm			inch	kg		lb
				t max.	A_4	L_4	A_5	UCT	S(SM)	C(CM)
UC217D1	T217D1	—	**C(CM)-UCT217D1**	5	—	260	155	11	—	14
UC217-304D1	T217D1		**C(CM)-UCT217-304D1**							
UC217-305D1	T217D1	—	**C(CM)-UCT217-305D1**	13/64	—	10 1/4	6 3/32	24	—	31
UC217-307D1	T217D1		**C(CM)-UCT217-307D1**							

Take-up units cast housing
Set screw type

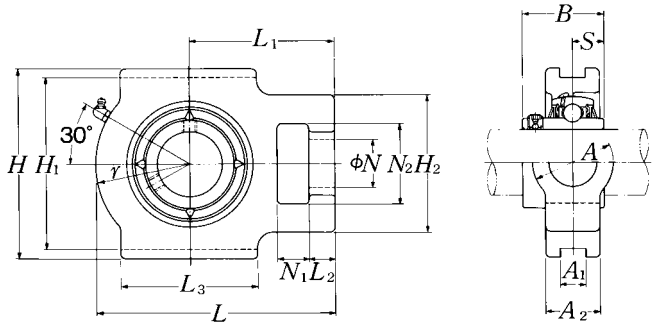

Shaft dia. mm / inch	Unit number [1]	Nominal dimensions															
									mm		inch						
		N_1	L_2	H_2	N_2	N	L_3	A_1	H_1	H	L	A_2	A	r	L_1	B	S
25	UCT305D1	16	14	62	36	26	65	12	80	89	122	26	36	46	76	38	15
13/16	UCT305-013D1																
7/8	UCT305-014D1	5/8	9/16	2 7/16	1 13/32	1 1/32	2 9/16	0.472	3 5/32	3 1/2	4 13/16	1 1/32	1 13/32	1 13/16	3	1.4961	0.591
15/16	UCT305-015D1																
1	UCT305-100D1																
30	UCT306D1	18	16	70	41	28	74	16	90	100	137	28	41	52	85	43	17
1 1/16	UCT306-101D1																
1 1/8	UCT306-102D1	23/32	5/8	2 3/4	1 5/8	1 3/32	2 29/32	0.630	3 35/64	3 15/16	5 13/32	1 3/32	1 5/8	2 1/16	3 11/32	1.6929	0.669
1 3/16	UCT306-103D1																
35	UCT307D1	20	17	75	45	30	80	16	100	111	150	32	45	56	94	48	19
1 1/4	UCT307-104D1																
1 5/16	UCT307-105D1	25/32	21/32	2 15/16	1 25/32	1 3/16	3 5/32	0.630	3 15/16	4 3/8	5 29/32	1 1/4	1 25/32	2 7/32	3 11/16	1.8898	0.748
1 3/8	UCT307-106D1																
1 7/16	UCT307-107D1																
40	UCT308D1	22	19	83	50	32	89	18	112	124	162	34	50	62	100	52	19
1 1/2	UCT308-108D1	7/8	3/4	3 9/32	1 31/32	1 1/4	3 1/2	0.709	4 13/32	4 7/8	6 3/8	1 11/32	1 31/32	2 7/16	3 15/16	2.0472	0.748
1 9/16	UCT308-109D1																
45	UCT309D1	24	20	90	55	34	97	18	125	138	178	38	55	68	110	57	22
1 5/8	UCT309-110D1																
1 11/16	UCT309-111D1	15/16	25/32	3 17/32	2 5/32	1 11/32	3 13/16	0.709	4 59/64	5 7/16	7	1 1/2	2 5/32	2 11/16	4 11/32	2.2441	0.866
1 3/4	UCT309-112D1																
50	UCT310D1	27	22	98	61	37	106	20	140	151	192	40	61	74	118	61	22
1 13/16	UCT310-113D1																
1 7/8	UCT310-114D1	1 1/16	7/8	3 27/32	2 13/32	1 15/32	4 3/16	0.787	5 33/64	5 15/16	7 9/16	1 9/16	2 13/32	2 29/32	4 21/32	2.4016	0.866
1 15/16	UCT310-115D1																
55	UCT311D1	29	23	105	66	39	115	22	150	163	207	44	66	80	127	66	25
2	UCT311-200D1																
2 1/16	UCT311-201D1	1 5/32	29/32	4 1/8	2 19/32	1 17/32	4 17/32	0.866	5 29/32	6 13/32	8 5/32	1 23/32	2 19/32	3 5/32	5	2.5984	0.984
2 1/8	UCT311-202D1																
2 3/16	UCT311-203D1																

Remarks: 1) These numbers indicate relubricatable type. If maintenance free type is needed, please order without suffix "D1".
Note: Please refer to page 36 for size of grease fitting.

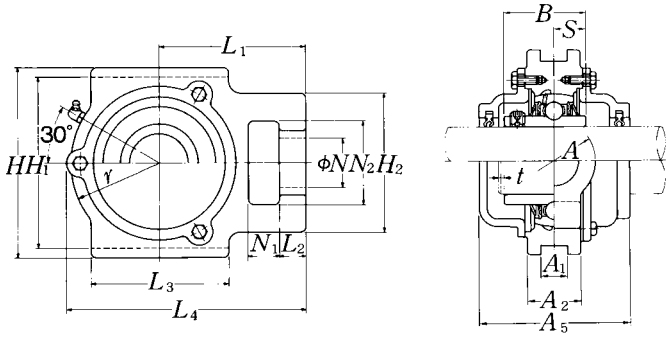

Cast dust cover type
Open end: **C-UCT···D1**
Closed end: **CM-UCT···D1**

Bearing number	Housing [1] number	Unit number [1] cast dust cover type	Nominal dimensions mm t max.	L_4	inch A_5	Mass of unit kg UCT	lb C(CM)
UC305D1	T305D1	C(CM)-UCT305D1	2	122	80	1.4	1.7
UC305-013D1	T305D1	C(CM)-UCT305-013D1					
UC305-014D1	T305D1	C(CM)-UCT305-014D1	5/64	4 13/16	3 5/32	3.1	3.8
UC305-015D1	T305D1	C(CM)-UCT305-015D1					
UC305-100D1	T305D1	C(CM)-UCT305-100D1					
UC306D1	T306D1	C(CM)-UCT306D1	2	139	85	1.8	2.4
UC306-101D1	T306D1	C(CM)-UCT306-101D1					
UC306-102D1	T306D1	C(CM)-UCT306-102D1	5/64	5 31/32	3 11/32	4.0	5.3
UC306-103D1	T306D1	C(CM)-UCT306-103D1					
UC307D1	T307D1	C(CM)-UCT307D1	3	152	95	2.3	3.2
UC307-104D1	T307D1	C(CM)-UCT307-104D1					
UC307-105D1	T307D1	C(CM)-UCT307-105D1	1/8	5 31/32	3 3/4	5.1	7.1
UC307-106D1	T307D1	C(CM)-UCT307-106D1					
UC307-107D1	T307D1	C(CM)-UCT307-107D1					
UC308D1	T308D1	C(CM)-UCT308D1	3	164	105	3.0	4.2
UC308-108D1	T308D1	C(CM)-UCT308-108D1	1/8	6 15/32	4 1/8	6.6	9.3
UC308-109D1	T308D1	C(CM)-UCT308-109D1					
UC309D1	T309D1	C(CM)-UCT309D1	3	181	110	4.0	5.4
UC309-110D1	T309D1	C(CM)-UCT309-110D1					
UC309-111D1	T309D1	C(CM)-UCT309-111D1	1/8	7 1/8	4 11/32	8.8	12
UC309-112D1	T309D1	C(CM)-UCT309-112D1					
UC310D1	T310D1	C(CM)-UCT310D1	3	197	120	5.0	7.0
UC310-113D1	T310D1	C(CM)-UCT310-113D1					
UC310-114D1	T310D1	C(CM)-UCT310-114D1	1/8	7 3/4	4 23/32	11	15
UC310-115D1	T310D1	C(CM)-UCT310-115D1					
UC311D1	T311D1	C(CM)-UCT311D1	4	211	125	6.3	8.4
UC311-200D1	T311D1	C(CM)-UCT311-200D1					
UC311-201D1	T311D1	C(CM)-UCT311-201D1	5/32	8 5/16	4 29/32	14	19
UC311-202D1	T311D1	C(CM)-UCT311-202D1					
UC311-203D1	T311D1	C(CM)-UCT311-203D1					

Take-up units cast housing
Set screw type

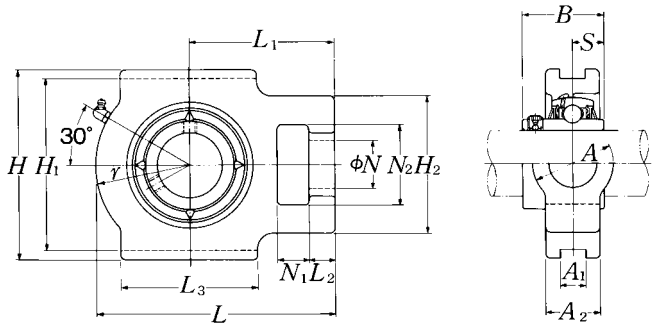

Shaft dia. mm / inch	Unit number [1]	Nominal dimensions															
		mm									inch						
		N_1	L_2	H_2	N_2	N	L_3	A_1	H_1	H	L	A_2	A	r	L_1	B	S
60	UCT312D1	31	25	113	71	41	123	22	160	178	220	46	71	85	135	71	26
2 1/4	UCT312-204D1																
2 5/16	UCT312-205D1	1 7/32	31/32	4 7/16	2 25/32	1 5/8	4 27/32	0.866	6 19/64	7	8 21/32	1 13/16	2 25/32	3 11/32	5 5/16	2.7953	1.024
2 3/8	UCT312-206D1																
2 7/16	UCT312-207D1																
65	UCT313D1	32	27	116	70	43	134	26	170	190	238	50	80	92	146	75	30
2 1/2	UCT313-208D1	1 1/4	1 1/16	4 9/16	2 3/4	1 11/16	5 9/32	1.024	6 11/16	7 15/32	9 3/8	1 31/32	3 5/32	3 5/8	5 3/4	2.9528	1.181
2 9/16	UCT313-209D1																
70	UCT314D1	36	27	130	85	46	140	26	180	202	252	52	90	97	155	78	33
2 5/8	UCT314-210D1																
2 11/16	UCT314-211D1	1 13/32	1 1/16	5 1/8	3 11/32	1 13/16	5 1/2	1.024	7 3/32	7 15/16	9 29/32	2 1/16	3 17/32	3 13/16	6 3/32	3.0709	1.299
2 3/4	UCT314-212D1																
75	UCT315D1	36	27	132	85	46	150	26	192	216	262	55	90	102	160	82	32
2 13/16	UCT315-213D1																
2 7/8	UCT315-214D1	1 13/32	1 1/16	5 3/16	3 11/32	1 13/16	5 29/32	1.024	7 9/16	8 1/2	10 5/16	2 5/32	3 17/32	4 1/32	6 5/16	3.2283	1.260
2 15/16	UCT315-215D1																
3	UCT315-300D1																
80	UCT316D1	42	30	150	98	53	160	30	204	230	282	60	102	108	174	86	34
3 1/16	UCT316-301D1																
3 1/8	UCT316-302D1	1 21/32	1 3/16	5 29/32	3 27/32	2 3/32	6 5/16	1.181	8 1/32	9 1/16	11 3/32	2 3/8	4 1/32	4 1/4	6 27/32	3.3858	1.339
3 3/16	UCT316-303D1																
85	UCT317D1	42	32	152	98	53	170	32	214	240	298	64	102	115	183	96	40
3 1/4	UCT317-304D1																
3 5/16	UCT317-305D1	1 21/32	1 1/4	5 31/32	3 27/32	2 3/32	6 11/16	1.260	8 27/64	9 7/16	11 23/32	2 17/32	4 1/32	4 17/32	7 7/32	3.7795	1.575
3 7/16	UCT317-307D1																
90	UCT318D1	46	32	160	106	57	175	32	228	255	312	66	110	120	192	96	40
3 7/16	UCT318-307D1	1 13/16	1 1/4	6 5/16	4 3/16	2 1/4	6 7/8	1.260	8 31/32	10 1/32	12 9/32	2 19/32	4 11/32	4 23/32	7 9/16	3.7795	1.575
3 1/2	UCT318-308D1																

Remarks: 1) These numbers indicate relubricatable type. If maintenance free type is needed, please order without suffix "D1".
Note: Please refer to page 36 for size of grease fitting.

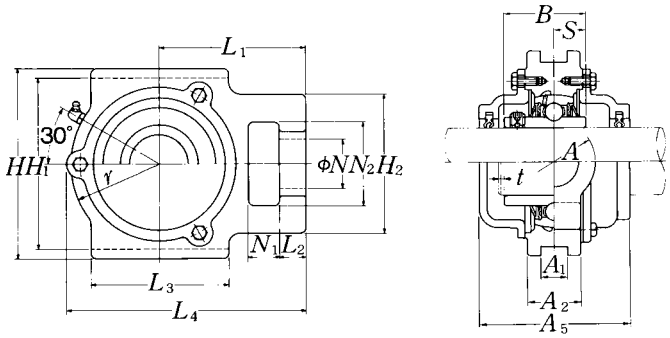

Cast dust cover type
Open end: **C-UCT···D1**
Closed end: **CM-UCT···D1**

Bearing number	Housing [1] number	Unit number [1] cast dust cover type	Nominal dimensions mm t max.	L_4	A_5	Nominal dimensions inch t max.	L_4	A_5	Mass of unit kg UCT	Mass of unit lb C(CM)
UC312D1	T312D1	C(CM)-UCT312D1	4	227	135	5/32	8 15/16	5 5/16	7.6	10
UC312-204D1	T312D1	C(CM)-UCT312-204D1								
UC312-205D1	T312D1	C(CM)-UCT312-205D1							17	22
UC312-206D1	T312D1	C(CM)-UCT312-206D1								
UC312-207D1	T312D1	C(CM)-UCT312-207D1								
UC313D1	T313D1	C(CM)-UCT313D1	4	244	140	5/32	9 19/32	5 1/2	9.4	12
UC313-208D1	T313D1	C(CM)-UCT313-208D1							21	26
UC313-209D1	T313D1	C(CM)-UCT313-209D1								
UC314D1	T314D1	C(CM)-UCT314D1	4	258	140	5/32	10 5/32	5 1/2	11	14
UC314-210D1	T314D1	C(CM)-UCT314-210D1								
UC314-211D1	T314D1	C(CM)-UCT314-211D1							24	31
UC314-212D1	T314D1	C(CM)-UCT314-212D1								
UC315D1	T315D1	C(CM)-UCT315D1	4	268	150	5/32	10 9/16	5 29/32	13	17
UC315-213D1	T315D1	C(CM)-UCT315-213D1								
UC315-214D1	T315D1	C(CM)-UCT315-214D1							29	37
UC315-215D1	T315D1	C(CM)-UCT315-215D1								
UC315-300D1	T315D1	C(CM)-UCT315-300D1								
UC316D1	T316D1	C(CM)-UCT316D1	4	287	155	5/32	11 5/16	6 3/32	16	20
UC316-301D1	T316D1	C(CM)-UCT316-301D1								
UC316-302D1	T316D1	C(CM)-UCT316-302D1							35	44
UC316-303D1	T316D1	C(CM)-UCT316-303D1								
UC317D1	T317D1	C(CM)-UCT317D1	5	303	170	13/64	11 15/16	6 11/16	19	25
UC317-304D1	T317D1	C(CM)-UCT317-304D1								
UC317-305D1	T317D1	C(CM)-UCT317-305D1							42	55
UC317-307D1	T317D1	C(CM)-UCT317-307D1								
UC318D1	T318D1	C(CM)-UCT318D1	5	317	170	13/64	12 15/32	6 11/16	21	27
UC318-307D1	T318D1	C(CM)-UCT318-307D1							46	60
UC318-308D1	T318D1	C(CM)-UCT318-308D1								

Take-up units cast housing
Set screw type

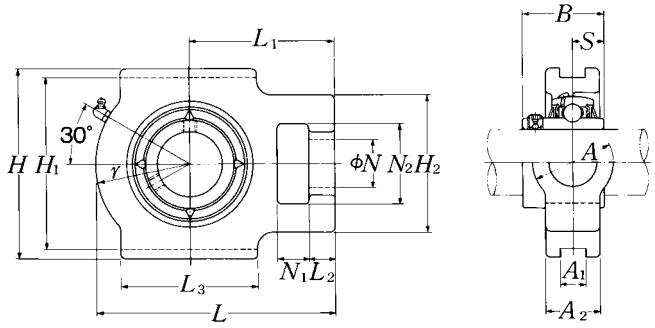

Shaft dia. mm / inch	Unit number [1]	Nominal dimensions mm / inch															
		N_1	L_2	H_2	N_2	N	L_3	A_1	H_1	H	L	A_2	A	r	L_1	B	S
95	UCT319D1	46	33	165	106	57	180	35	240	270	322	72	110	125	197	103	41
3 5/8	UCT319-310D1																
3 11/16	UCT319-311D1	1 13/16	1 5/16	6 1/2	4 3/16	2 1/4	7 3/32	1.378	9 29/64	10 5/8	12 11/16	2 27/32	4 11/32	4 29/32	7 3/4	4.0551	1.614
3 3/4	UCT319-312D1																
100	UCT320D1	48	34	175	115	59	200	35	260	290	345	75	120	135	210	108	42
3 13/16	UCT320-313D1																
3 7/8	UCT320-314D1	1 7/8	1 11/32	6 7/8	4 17/32	2 5/16	7 7/8	1.378	10 15/64	11 13/32	13 19/32	2 15/16	4 23/32	5 5/16	8 9/32	4.2520	1.654
3 15/16	UCT320-315D1																
4	UCT320-400D1																
105	UCT321D1	48	34	175	115	59	200	35	260	290	347	75	120	135	212	112	44
110	UCT322D1	52	40	185	125	65	215	38	285	320	385	80	130	150	235	117	46
120	UCT324D1	60	44	210	140	70	230	45	320	355	432	90	140	165	267	126	51
130	UCT326D1	65	47	220	150	75	240	50	350	385	465	100	150	180	285	135	54
140	UCT328D1	70	52	230	160	80	255	50	380	415	515	100	155	200	315	145	59

Remarks: 1) These numbers indicate relubricatable type. If maintenance free type is needed, please order without suffix "D1".
Note: Please refer to page 36 for size of grease fitting.

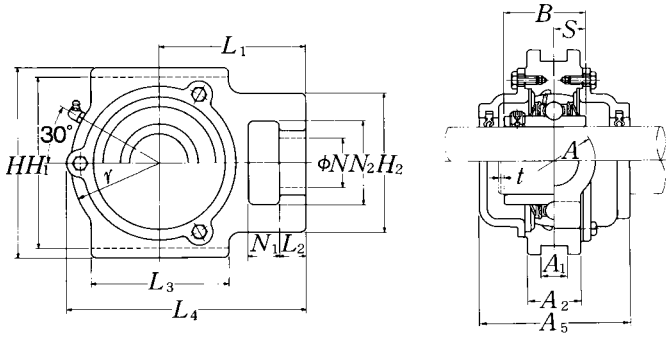

Cast dust cover type
Open end: **C-UCT···D1**
Closed end: **CM-UCT···D1**

Bearing number	Housing [1] number	Unit number [1] cast dust cover type	Nominal [1] dimensions mm		inch	Mass of unit kg	lb
			t max.	L_4	A_5	UCT	C(CM)
UC319D1	T319D1	**C(CM)-UCT319D1**	5	327	180	24	31
UC319-310D1	T319D1	**C(CM)-UCT319-310D1**					
UC319-311D1	T319D1	**C(CM)-UCT319-311D1**	13/64	12 7/8	7 3/32	53	68
UC319-312D1	T319D1	**C(CM)-UCT319-312D1**					
UC320D1	T320D1	**C(CM)-UCT320D1**	5	350	190	30	38
UC320-313D1	T320D1	**C(CM)-UCT320-313D1**					
UC320-314D1	T320D1	**C(CM)-UCT320-314D1**	13/64	13 25/32	7 15/32	66	84
UC320-315D1	T320D1	**C(CM)-UCT320-315D1**					
UC320-400D1	T320D1	**C(CM)-UCT320-400D1**					
UC321D1D1	T321D1	**C(CM)-UCT321D1**	5	359	195	32	43
UC322D1D1	T322D1	**C(CM)-UCT322D1**	5	395	200	40	55
UC324D1D1	T324D1	**C(CM)-UCT324D1**	5	439	215	55	71
UC326D1D1	T326D1	**C(CM)-UCT326D1**	6	476	225	69	92
UC328D1D1	T328D1	**C(CM)-UCT328D1**	6	519	235	84	111

Take-up units cast housing
Set screw type

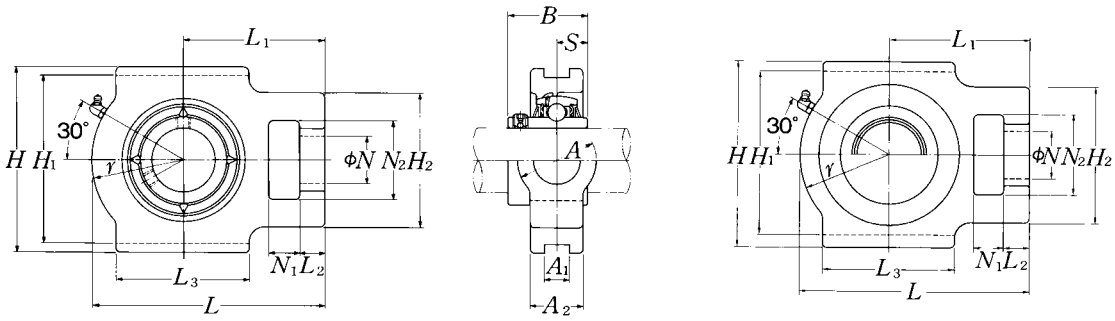

Pressed steel dust cover type
Open end: **S-UCTX···D1**
Closed end: **SM-UCTX···D1**

Shaft dia. mm / inch	Unit number [1]	Nominal dimensions (mm / inch) N_1	L_2	H_2	N_2	N	L_3	A_1	H_1	H	L	A_2	A	r	L_1	B	S
25	UCTX05D1	16	12	56	37	22	57	12	89	102	113	28	37	43	70	38.1	15.9
13/16	UCTX05-013D1																
7/8	UCTX05-014D1	5/8	15/32	2 7/32	1 15/32	7/8	2 1/4	0.472	3 1/2	4 1/32	4 7/16	1 3/32	1 15/32	1 11/16	2 3/4	1.5000	0.626
15/16	UCTX05-015D1																
1	UCTX05-100D1																
30	UCTX06D1	16	15	64	37	22	64	12	89	102	129	30	37	51	78	42.9	17.5
1 1/16	UCTX06-101D1																
1 1/8	UCTX06-102D1	5/8	19/32	2 17/32	1 15/32	7/8	2 17/32	0.472	3 1/2	4 1/32	5 3/32	1 3/16	1 15/32	2	3 1/16	1.6890	0.689
1 3/16	UCTX06-103D1																
1 1/4	UCTX06-104D1																
35	UCTX07D1	19	17	83	49	29	83	16	102	114	144	36	49	56	88	49.2	19
1 5/16	UCTX07-105D1																
1 3/8	UCTX07-106D1	3/4	21/32	3 9/32	1 15/16	1 5/32	3 9/32	0.630	4 1/64	4 1/2	5 21/32	1 13/32	1 15/16	2 7/32	3 15/32	1.9370	0.748
1 7/16	UCTX07-107D1																
40	UCTX08D1	19	17	83	49	29	83	16	102	117	144	36	49	57	87	49.2	19
1 1/2	UCTX08-108D1	3/4	21/32	3 9/32	1 15/16	1 5/32	3 9/32	0.630	4 1/64	4 19/32	5 21/32	1 13/32	1 15/16	2 1/4	3 7/16	1.9370	0.748
1 9/16	UCTX08-109D1																
45	UCTX09D1	19	18	83	49	29	86	16	102	117	151	38	49	59	92	51.6	19
1 5/8	UCTX09-110D1																
1 11/16	UCTX09-111D1	3/4	23/32	3 9/32	1 15/16	1 5/32	3 3/8	0.630	4 1/64	4 19/32	5 15/16	1 1/2	1 15/16	2 5/16	3 5/8	2.0315	0.748
1 3/4	UCTX09-112D1																
1 13/16	UCTX09-113D1																
50	UCTX10D1	25	21	102	64	35	95	22	130	146	171	42	64	65	106	55.6	22.2
1 7/8	UCTX10-114D1																
1 15/16	UCTX10-115D1	31/32	13/16	4 1/32	2 17/32	1 3/8	3 3/4	0.866	5 1/8	5 3/4	6 23/32	1 21/32	2 17/32	2 9/16	4 3/16	2.1890	0.874
2	UCTX10-200D1																

Remarks: 1) These numbers indicate relubricatable type. If maintenance free type is needed, please order without suffix "D1".
Note: Please refer to page 36 for size of grease fitting.

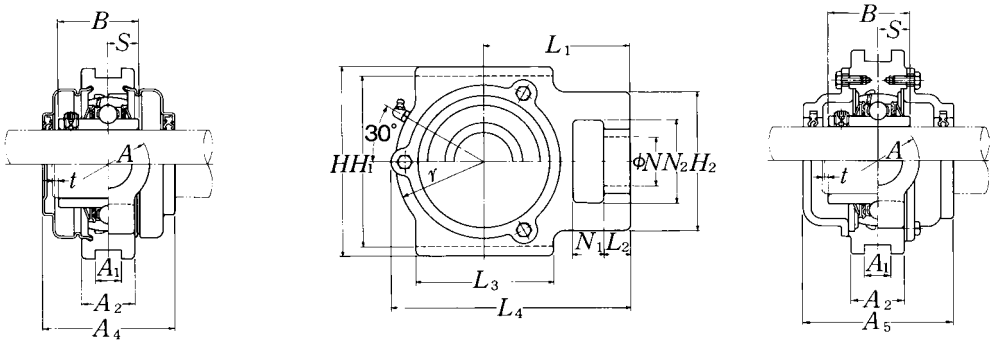

Cast dust cover type
Open end: **C-UCTX···D1**
Closed end: **CM-UCTX···D1**

Bearing number	Housing number [1]	Unit number [1] pressed steel dust cover type	Unit number [1] cast dust cover type	Nominal dimensions mm / inch: t max.	A_4	L_4	A_5	Mass of unit kg / lb: UCTX	S(SM)	C(CM)
UCX05D1	TX05D1	S(SM)-UCTX05D1	C(CM)-UCTX05D1	2	62	113.5	75	1.4	1.5	1.8
UCX05-013D1	TX05D1	S(SM)-UCTX05-013D1	C(CM)-UCTX05-013D1							
UCX05-014D1	TX05D1	S(SM)-UCTX05-014D1	C(CM)-UCTX05-014D1	5/64	2 7/16	4 15/32	2 15/16	3.1	3.3	4.0
UCX05-015D1	TX05D1	S(SM)-UCTX05-015D1	C(CM)-UCTX05-015D1							
UCX05-100D1	TX05D1	S(SM)-UCTX05-100D1	C(CM)-UCTX05-100D1							
UCX06D1	TX06D1	S(SM)-UCTX06D1	C(CM)-UCTX06D1	2	72	129	80	1.8	2.0	2.3
UCX06-101D1	TX06D1	S(SM)-UCTX06-101D1	C(CM)-UCTX06-101D1							
UCX06-102D1	TX06D1	S(SM)-UCTX06-102D1	C(CM)-UCTX06-102D1	5/64	2 27/32	5 3/32	3 5/32	4.0	4.4	5.1
UCX06-103D1	TX06D1	S(SM)-UCTX06-103D1	C(CM)-UCTX06-103D1							
UCX06-104D1	TX06D1	S(SM)-UCTX06-104D1	C(CM)-UCTX06-104D1							
UCX07D1	TX07D1	S(SM)-UCTX07D1	C(CM)-UCTX07D1	3	82	144	90	2.6	2.8	3.5
UCX07-105D1	TX07D1	S(SM)-UCTX07-105D1	C(CM)-UCTX07-105D1							
UCX07-106D1	TX07D1	S(SM)-UCTX07-106D1	C(CM)-UCTX07-106D1	1/8	3 7/32	5 21/32	3 17/32	5.7	6.2	7.7
UCX07-107D1	TX07D1	S(SM)-UCTX07-107D1	C(CM)-UCTX07-107D1							
UCX08D1	TX08D1	S(SM)-UCTX08D1	C(CM)-UCTX08D1	3	82	144.5	95	2.6	2.8	3.5
UCX08-108D1	TX08D1	S(SM)-UCTX08-108D1	C(CM)-UCTX08-108D1	1/8	3 7/32	5 11/16	3 3/4	5.7	6.2	7.7
UCX08-109D1	TX08D1	S(SM)-UCTX08-109D1	C(CM)-UCTX08-109D1							
UCX09D1	TX09D1	S(SM)-UCTX09D1	C(CM)-UCTX09D1	3	87	152	100	2.7	3.0	3.7
UCX09-110D1	TX09D1	S(SM)-UCTX09-110D1	C(CM)-UCTX09-110D1							
UCX09-111D1	TX09D1	S(SM)-UCTX09-111D1	C(CM)-UCTX09-111D1	1/8	3 7/16	5 31/32	3 15/16	6.0	6.6	8.2
UCX09-112D1	TX09D1	S(SM)-UCTX09-112D1	C(CM)-UCTX09-112D1							
UCX09-113D1	TX09D1	S(SM)-UCTX09-113D1	C(CM)-UCTX09-113D1							
UCX10D1	TX10D1	S(SM)-UCTX10D1	C(CM)-UCTX10D1	3	92	171.5	100	4.2	4.6	5.4
UCX10-114D1	TX10D1	S(SM)-UCTX10-114D1	C(CM)-UCTX10-114D1							
UCX10-115D1	TX10D1	S(SM)-UCTX10-115D1	C(CM)-UCTX10-115D1	1/8	3 5/8	6 3/4	3 15/16	9.3	10	12
UCX10-200D1	TX10D1	S(SM)-UCTX10-200D1	C(CM)-UCTX10-200D1							

Take-up units cast housing
Set screw type

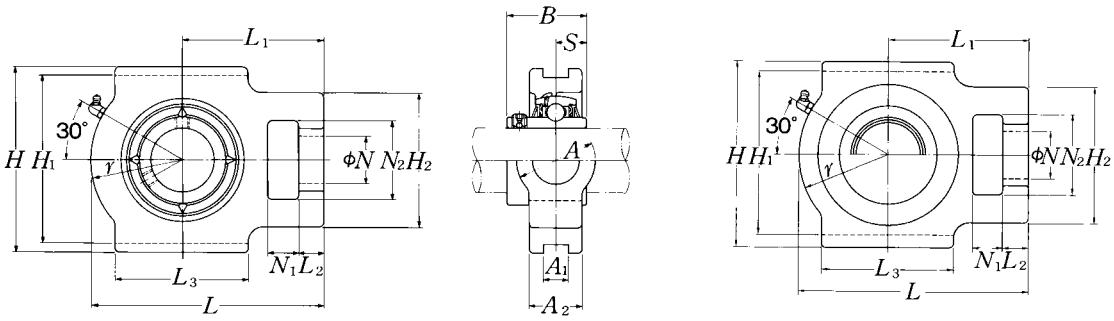

Pressed steel dust cover type
Open end: **S-UCTX···D1**
Closed end: **SM-UCTX···D1**

Shaft dia. mm / inch	Unit number [1]	Nominal dimensions (mm / inch) N_1	L_2	H_2	N_2	N	L_3	A_1	H_1	H	L	A_2	A	r	L_1	B	S
55	UCTX11D1	32	21	102	64	35	102	22	130	146	194	44	64	75	119	65.1	25.4
2 1/16	UCTX11-201D1																
2 1/8	UCTX11-202D1																
2 3/16	UCTX11-203D1	1 1/4	13/16	4 1/32	2 17/32	1 3/8	4 1/32	0.866	5 1/8	5 3/4	7 5/8	1 23/32	2 17/32	2 15/16	4 11/16	2.5630	1.000
2 1/4	UCTX11-204D1																
2 5/16	UCTX11-205D1																
60	UCTX12D1	32	23	111	70	41	121	26	151	167	224	48	70	87	137	65.1	25.4
2 3/8	UCTX12-206D1	1 1/4	29/32	4 3/8	2 3/4	1 5/8	4 3/4	1.024	5 15/16	6 9/16	8 13/16	1 7/8	2 3/4	3 7/16	5 13/32	2.5630	1.000
2 7/16	UCTX12-207D1																
65	UCTX13D1	32	23	111	70	41	121	26	151	167	224	48	70	87	137	74.6	30.2
2 1/2	UCTX13-208D1	1 1/4	29/32	4 3/8	2 3/4	1 5/8	4 3/4	1.024	5 15/16	6 9/16	8 13/16	1 7/8	2 3/4	3 7/16	5 13/32	2.9370	1.189
2 9/16	UCTX13-209D1																
70	UCTX14D1	32	23	111	70	41	121	26	151	167	232	48	70	92	140	77.8	33.3
2 5/8	UCTX14-210D1																
2 11/16	UCTX14-211D1	1 1/4	29/32	4 3/8	2 3/4	1 5/8	4 3/4	1.024	5 15/16	6 9/16	9 1/8	1 7/8	2 3/4	3 5/8	5 1/2	3.0630	1.311
2 3/4	UCTX14-212D1																
75	UCTX15D1	32	23	111	70	41	121	28	165	184	235	48	70	95	140	82.6	33.3
2 13/16	UCTX15-213D1																
2 7/8	UCTX15-214D1	1 1/4	29/32	4 3/8	2 3/4	1 5/8	4 3/4	1.102	6 1/2	7 1/4	9 1/4	1 7/8	2 3/4	3 3/4	5 1/2	3.2520	1.311
2 15/16	UCTX15-215D1																
3	UCTX15-300D1																
80	UCTX16D1	38	30	124	73	48	157	28	173	198	260	54	73	98	162	85.7	34.1
3 1/16	UCTX16-301D1																
3 1/8	UCTX16-302D1	1 1/2	1 3/16	4 7/8	2 7/8	1 7/8	6 3/16	1.102	6 13/16	7 25/32	10 1/4	2 1/8	2 7/8	3 27/32	6 3/8	3.3740	1.343
3 3/16	UCTX16-303D1																
3 1/4	UCTX16-304D1																
85	UCTX17D1	38	30	124	73	48	157	28	173	198	260	54	73	98	162	96	39.7
3 5/16	UCTX17-305D1	1 1/2	1 3/16	4 7/8	2 7/8	1 7/8	6 3/16	1.102	6 13/16	7 25/32	10 1/4	2 1/8	2 7/8	3 27/32	6 3/8	3.7795	1.563
3 7/16	UCTX17-307D1																

Remarks: 1) These numbers indicate relubricatable type. If maintenance free type is needed, please order without suffix "D1".
Note: Please refer to page 36 for size of grease fitting.

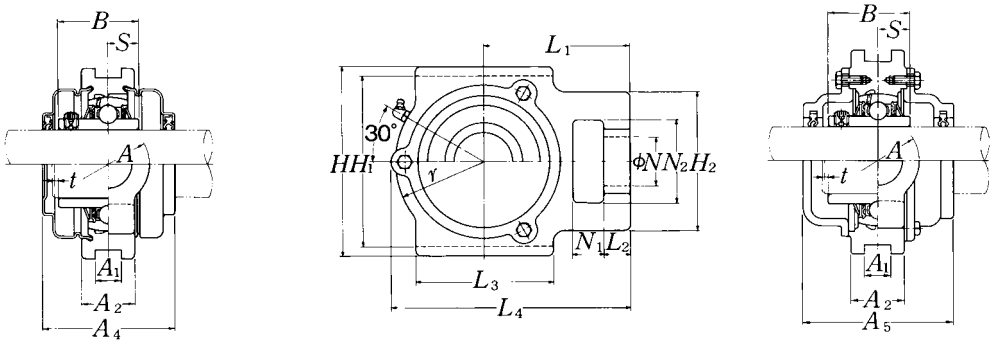

Cast dust cover type
Open end: **C-UCTX···D1**
Closed end: **CM-UCTX···D1**

Bearing number	Housing number [1]	Unit number [1] pressed steel dust cover type	Unit number [1] cast dust cover type	Nominal dimensions mm t max.	A_4	L_4	A_5	Nominal dimensions inch t max.	A_4	L_4	A_5	Mass of unit kg UCTX	S(SM)	C(CM)	Mass of unit lb UCTX	S(SM)	C(CM)
UCX11D1	TX11D1	S(SM)-UCTX11D1	C(CM)-UCTX11D1	4	102	194	115					5.2	5.6	6.7			
UCX11-201D1	TX11D1	S(SM)-UCTX11-201D1	C(CM)-UCTX11-201D1														
UCX11-202D1	TX11D1	S(SM)-UCTX11-202D1	C(CM)-UCTX11-202D1														
UCX11-203D1	TX11D1	S(SM)-UCTX11-203D1	C(CM)-UCTX11-203D1					5/32	4 1/32	7 5/8	4 17/32	11	12	15			
UC212-204D1	TX11D1	S(SM)-UCTX11-204D1	C(CM)-UCTX11-204D1														
UC212-205D1	TX11D1	S(SM)-UCTX11-205D1	C(CM)-UCTX11-205D1														
UCX12D1	TX12D1	S(SM)-UCTX12D1	C(CM)-UCTX12D1	4	107	224	120					7.2	7.7	9.0			
UCX12-206D1	TX12D1	S(SM)-UCTX12-206D1	C(CM)-UCTX12-206D1					5/32	4 7/32	8 13/16	4 23/32	16	17	20			
UCX12-207D1	TX12D1	S(SM)-UCTX12-207D1	C(CM)-UCTX12-207D1														
UCX13D1	TX13D1	—	C(CM)-UCTX13D1	4	—	224	135					7.5	—	9.8			
UCX13-208D1	TX13D1	—	C(CM)-UCTX13-208D1					5/32	—	8 13/16	5 5/16	17	—	22			
UCX13-209D1	TX13D1		C(CM)-UCTX13-209D1														
UCX14D1	TX14D1	—	C(CM)-UCTX14D1	4	—	232	135					7.7	—	10			
UCX14-210D1	TX14D1		C(CM)-UCTX14-210D1														
UCX14-211D1	TX14D1	—	C(CM)-UCTX14-211D1					5/32	—	9 1/8	5 5/16	17	—	22			
UCX14-212D1	TX14D1		C(CM)-UCTX14-212D1														
UCX15D1	TX15D1	—	C(CM)-UCTX15D1	4	—	235	145					8.3	—	11			
UCX15-213D1	TX15D1		C(CM)-UCTX15-213D1														
UCX15-214D1	TX15D1	—	C(CM)-UCTX15-214D1					5/32	—	9 1/4	5 23/32	18	—	24			
UCX15-215D1	TX15D1		C(CM)-UCTX15-215D1														
UCX15-300D1	TX15D1		C(CM)-UCTX15-300D1														
UCX16D1	TX16D1	—	C(CM)-UCTX16D1	4	—	260	155					11	—	14			
UCX16-301D1	TX16D1		C(CM)-UCTX16-301D1														
UCX16-302D1	TX16D1	—	C(CM)-UCTX16-302D1					5/32	—	10 1/4	6 3/32	24	—	31			
UCX16-303D1	TX16D1		C(CM)-UCTX16-303D1														
UC217-304D1	TX16D1		C(CM)-UCTX16-304D1														
UCX17D1	TX17D1	—	C(CM)-UCTX17D1	5	—	262	165					11	—	15			
UCX17-305D1	TX17D1	—	C(CM)-UCTX17-305D1					13/64	—	10 5/16	6 1/2	24	—	33			
UCX17-307D1	TX17D1		C(CM)-UCTX17-307D1														

Take-up units (Steel series)
Set screw type

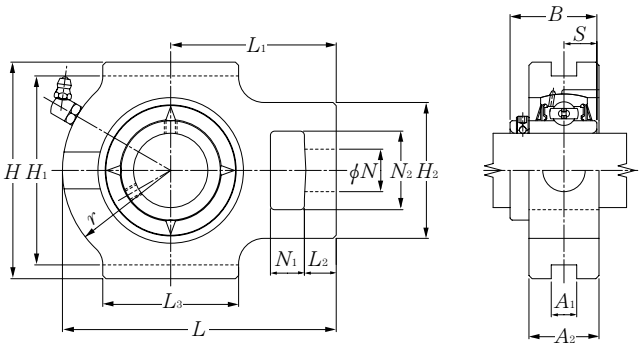

Shaft dia. mm	Unit number [1]	Nominal dimensions mm														
		N_1	L_2	H_2	N_2	N	L_3	A_1	H_1	H	L	A_2	r	L_1	B	S
12	UCTG201D1	16	12	51	32	19	51	12	76	89	94	30	33	61	31	12.7
15	UCTG202D1	16	12	51	32	19	51	12	76	89	94	30	33	61	31	12.7
17	UCTG203D1	16	12	51	32	19	51	12	76	89	94	30	33	61	31	12.7
20	UCTG204D1	16	12	51	32	19	51	12	76	89	94	30	33	61	31	12.7
25	UCTG205D1	16	12	51	32	19	51	12	76	89	97	30	35	62	34.1	14.3
30	UCTG206D1	16	12	56	37	22	57	12	89	102	113	35	43	70	38.1	15.9
35	UCTG207D1	16	15	64	37	22	64	12	89	102	129	35	51	78	42.9	17.5
40	UCTG208D1	19	18	83	49	29	83	16	102	114	144	45	56	88	49.2	19
45	UCTG209D1	19	18	83	49	29	83	16	102	117	145	45	57	88	49.2	19
50	UCTG210D1	19	18	83	49	29	86	16	102	117	151	45	59	92	51.6	19
55	UCTG211D1	25	21	102	64	35	95	22	130	146	171	55	65	106	55.6	22.2
60	UCTG212D1	32	21	102	64	35	102	22	130	146	194	55	75	119	65.1	25.4
65	UCTG213D1	32	23	111	70	41	121	26	151	167	224	60	87	137	65.1	25.4
70	UCTG214D1	32	23	111	70	41	121	26	151	167	224	60	87	137	74.6	30.2
75	UCTG215D1	32	23	111	70	41	121	26	151	167	232	60	92	140	77.8	33.3
80	UCTG216D1	32	23	111	70	41	121	26	165	184	235	60	95	140	82.6	33.3
85	UCTG217D1	38	31	124	73	48	157	30	173	198	260	70	98	162	85.7	34.1

Remarks: 1) These numbers indicate relubricatable type. If maintenance free type is needed, please order without suffix "D1".
Note: Please refer to page 36 for size of grease fitting.

Bearing number	Housing [1)] number	Mass of unit kg
UC201D1	TG204D1	1.2
UC202D1	TG204D1	1.2
UC203D1	TG204D1	1.1
UC204D1	TG204D1	1.1
UC205D1	TG205D1	1.1
UC206D1	TG206D1	1.7
UC207D1	TG207D1	2.0
UC208D1	TG208D1	3.3
UC209D1	TG209D1	3.2
UC210D1	TG210D1	3.3
UC211D1	TG211D1	5.7
UC212D1	TG212D1	6.4
UC213D1	TG213D1	9.6
UC214D1	TG214D1	9.4
UC215D1	TG215D1	9.7
UC216D1	TG216D1	10
UC217D1	TG217D1	15

Take-up units (Steel series)
Set screw type

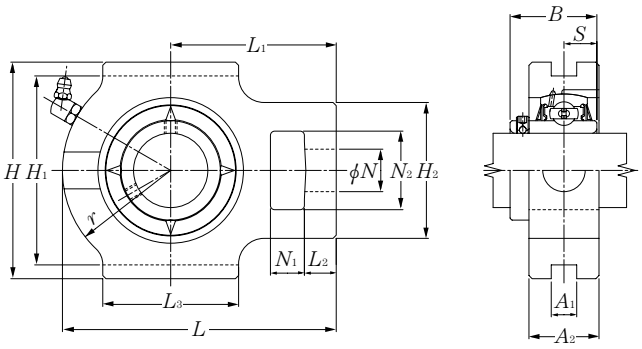

Shaft dia. mm	Unit number [1]	Nominal dimensions mm														
		N_1	L_2	H_2	N_2	N	L_3	A_1	H_1	H	L	A_2	r	L_1	B	S
25	UCTG305D1	16	14	62	36	26	65	12	80	89	122	35	46	76	38	15
30	UCTG306D1	18	16	70	41	28	74	16	90	100	137	40	52	85	43	17
35	UCTG307D1	20	17	75	45	30	80	16	100	111	150	40	56	94	48	19
40	UCTG308D1	22	19	83	50	32	89	18	112	124	162	45	62	100	52	19
45	UCTG309D1	24	20	90	55	34	97	18	125	138	178	50	68	110	57	22
50	UCTG310D1	27	22	98	61	37	106	20	140	151	192	55	74	118	61	22
55	UCTG311D1	29	23	105	66	39	115	22	150	163	207	60	80	127	66	25
60	UCTG312D1	31	25	113	71	41	123	22	160	178	220	65	85	135	71	26
65	UCTG313D1	32	27	116	70	43	134	26	170	190	238	65	92	146	75	30
70	UCTG314D1	36	27	130	85	46	140	26	180	202	252	70	97	155	78	33
75	UCTG315D1	36	27	132	85	46	150	26	192	216	262	70	102	160	82	32
80	UCTG316D1	42	30	150	98	53	160	30	204	230	282	80	108	174	86	34
85	UCTG317D1	42	32	152	98	53	170	32	214	240	298	80	115	183	96	40
90	UCTG318D1	46	32	160	106	57	175	32	228	255	312	90	120	192	96	40
95	UCTG319D1	46	33	165	106	57	180	35	240	270	322	90	125	197	103	41
100	UCTG320D1	48	34	175	115	59	200	35	260	290	345	100	135	210	108	42
105	UCTG321D1	48	34	175	115	59	200	35	260	290	347	100	135	212	112	44
110	UCTG322D1	52	40	185	125	65	215	38	285	320	385	100	150	235	117	46
120	UCTG324D1	60	44	210	140	70	230	45	320	355	432	110	165	267	126	51
130	UCTG326D1	65	47	220	150	75	240	50	350	385	465	120	180	285	135	54
140	UCTG328D1	70	52	230	160	80	255	50	380	415	515	120	200	315	145	59

Remarks: 1) These numbers indicate relubricatable type. If maintenance free type is needed, please order without suffix "D1".
Note: Please refer to page 36 for size of grease fitting.

Bearing number	Housing [1)] number	Mass of unit kg
UC305D1	TG305D1	1.8
UC306D1	TG306D1	2.5
UC307D1	TG307D1	3.0
UC308D1	TG308D1	4.0
UC309D1	TG309D1	5.4
UC310D1	TG310D1	6.9
UC311D1	TG311D1	8.6
UC312D1	TG312D1	11
UC313D1	TG313D1	12
UC314D1	TG314D1	15
UC315D1	TG315D1	17
UC316D1	TG316D1	22
UC317D1	TG317D1	24
UC318D1	TG318D1	29
UC319D1	TG319D1	31
UC320D1	TG320D1	41
UC321D1	TG321D1	40
UC322D1	TG322D1	49
UC324D1	TG324D1	68
UC326D1	TG326D1	85
UC328D1	TG328D1	103

Cartridge units cast housing
Set screw type

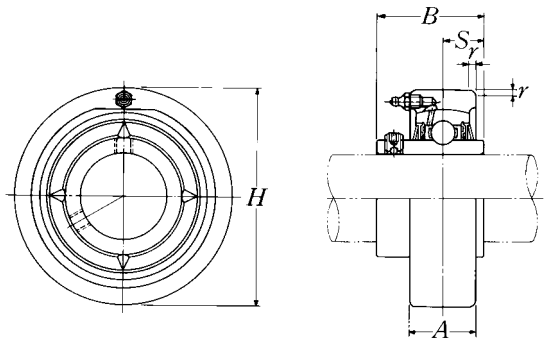

Shaft dia. mm / inch	Unit number 1)	Nominal dimensions mm / inch H	A	r	B	S	Bearing number	Housing 1) number	Mass of unit kg / lb
12	UCC201D1	72	20	2	31	12.7	UC201D1	C204D1	0.5
1/2	UCC201-008D1	2.8346	25/32	0.079	1.2205	0.500	UC201-008D1	C204D1	1.1
15	UCC202D1	72	20	2	31	12.7	UC202D1	C204D1	0.5
9/16	UCC202-009D1	2.8346	25/32	0.079	1.2205	0.500	UC202-009D1	C204D1	1.1
5/8	UCC202-010D1						UC202-010D1	C204D1	
17	UCC203D1	72	20	2	31	12.7	UC203D1	C204D1	0.5
11/16	UCC203-011D1	2.8346	25/32	0.079	1.2205	0.500	UC203-011D1	C204D1	1.1
20	UCC204D1	72	20	2	31	12.7	UC204D1	C204D1	0.5
3/4	UCC204-012D1	2.8346	25/32	0.079	1.2205	0.500	UC204-012D1	C204D1	1.1
25	UCC205D1	80	22	2	34.1	14.3	UC205D1	C205D1	0.6
13/16	UCC205-013D1						UC205-013D1	C205D1	
7/8	UCC205-014D1	3.1496	55/64	0.079	1.3425	0.563	UC205-014D1	C205D1	1.3
15/16	UCC205-015D1						UC205-015D1	C205D1	
1	UCC205-100D1						UC205-100D1	C205D1	
30	UCC206D1	85	27	2	38.1	15.9	UC206D1	C206D1	0.8
1 1/16	UCC206-101D1						UC206-101D1	C206D1	
1 1/8	UCC206-102D1	3.3465	1 1/16	0.079	1.5000	0.626	UC206-102D1	C206D1	1.8
1 3/16	UCC206-103D1						UC206-103D1	C206D1	
1 1/4	UCC206-104D1						UC206-104D1	C206D1	
35	UCC207D1	90	28	2	42.9	17.5	UC207D1	C207D1	0.9
1 1/4	UCC207-104D1						UC207-104D1	C207D1	
1 5/16	UCC207-105D1	3.5433	1 7/64	0.079	1.6890	0.689	UC207-105D1	C207D1	2.0
1 3/8	UCC207-106D1						UC207-106D1	C207D1	
1 7/16	UCC207-107D1						UC207-107D1	C207D1	
40	UCC208D1	100	30	2.5	49.2	19	UC208D1	C208D1	1.2
1 1/2	UCC208-108D1	3.9370	1 3/16	0.098	1.9370	0.748	UC208-108D1	C208D1	2.7
1 9/16	UCC208-109D1						UC208-109D1	C208D1	
45	UCC209D1	110	31	2.5	49.2	19	UC209D1	C209D1	1.5
1 5/8	UCC209-110D1						UC209-110D1	C209D1	
1 11/16	UCC209-111D1	4.3307	1 7/32	0.098	1.9370	0.748	UC209-111D1	C209D1	3.3
1 3/4	UCC209-112D1						UC209-112D1	C209D1	

Remarks: 1) These numbers indicate relubricatable type. If maintenance free type is needed, please order without suffix "D1".
Note: Please refer to page 36 for size of grease fitting.

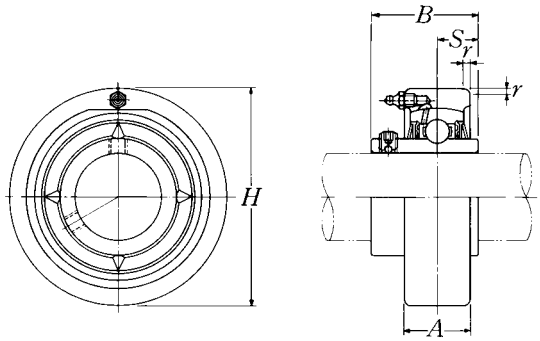

Shaft dia. mm / inch	Unit number [1]	Nominal dimensions mm / inch H	A	r	B	S	Bearing number	Housing [1] number	Mass of unit kg / lb
50	**UCC210D1**	120	33	2.5	51.6	19	UC210D1	C210D1	1.9
1 13/16	**UCC210-113D1**						UC210-113D1	C210D1	
1 7/8	**UCC210-114D1**	4.7244	1 19/64	0.098	2.0315	0.748	UC210-114D1	C210D1	4.2
1 15/16	**UCC210-115D1**						UC210-115D1	C210D1	
2	**UCC210-200D1**						UC210-200D1	C210D1	
55	**UCC211D1**	125	35	2.5	55.6	22.2	UC211D1	C211D1	2.1
2	**UCC211-200D1**						UC211-200D1	C211D1	
2 1/16	**UCC211-201D1**	4.9213	1 3/8	0.098	2.1890	0.874	UC211-201D1	C211D1	4.6
2 1/8	**UCC211-202D1**						UC211-202D1	C211D1	
2 3/16	**UCC211-203D1**						UC211-203D1	C211D1	
60	**UCC212D1**	130	38	2.5	65.1	25.4	UC212D1	C212D1	2.5
2 1/4	**UCC212-204D1**						UC212-204D1	C212D1	
2 5/16	**UCC212-205D1**	5.1181	1 1/2	0.098	2.5630	1.000	UC212-205D1	C212D1	5.5
2 3/8	**UCC212-206D1**						UC212-206D1	C212D1	
2 7/16	**UCC212-207D1**						UC212-207D1	C212D1	
65	**UCC213D1**	140	40	3	65.1	25.4	UC213D1	C213D1	3.0
2 1/2	**UCC213-208D1**	5.5118	1 37/64	0.118	2.5630	1.000	UC213-208D1	C213D1	6.6
2 9/16	**UCC213-209D1**						UC213-209D1	C213D1	

Cartridge units cast housing
Set screw type

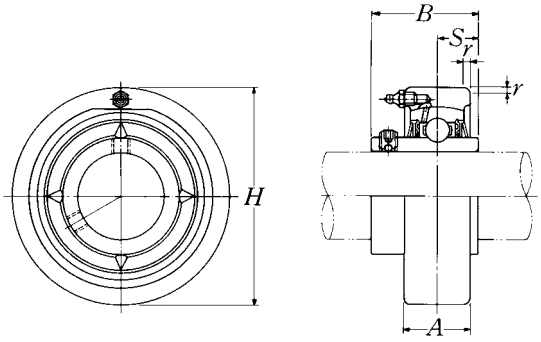

Shaft dia. mm inch	Unit number [1]	Nominal dimensions mm inch H	A	r	B	S	Bearing number	Housing [1] number	Mass of unit kg lb
25	UCC305D1	90	26	2.5	38	15	UC305D1	C305D1	1.0
13/16	UCC305-013D1						UC305-013D1	C305D1	
7/8	UCC305-014D1	3.5433	1 1/32	0.098	1.4961	0.591	UC305-014D1	C305D1	2.2
15/16	UCC305-015D1						UC305-015D1	C305D1	
1	UCC305-100D1						UC305-100D1	C305D1	
30	UCC306D1	100	28	2.5	43	17	UC306D1	C306D1	1.3
1 1/16	UCC306-101D1						UC306-101D1	C306D1	
1 1/8	UCC306-102D1	3.9370	1 7/64	0.098	1.6929	0.669	UC306-102D1	C306D1	2.9
1 3/16	UCC306-103D1						UC306-103D1	C306D1	
35	UCC307D1	110	32	3	48	19	UC307D1	C307D1	1.7
1 1/4	UCC307-104D1						UC307-104D1	C307D1	
1 5/16	UCC307-105D1	4.3307	1 17/64	0.118	1.8898	0.748	UC307-105D1	C307D1	3.8
1 3/8	UCC307-106D1						UC307-106D1	C307D1	
1 7/16	UCC307-107D1						UC307-107D1	C307D1	
40	UCC308D1	120	34	3	52	19	UC308D1	C308D1	2.1
1 1/2	UCC308-108D1	4.7244	1 11/32	0.118	2.0472	0.748	UC308-108D1	C308D1	4.6
1 9/16	UCC308-109D1						UC308-109D1	C308D1	
45	UCC309D1	130	38	3.5	57	22	UC309D1	C309D1	2.7
1 5/8	UCC309-110D1						UC309-110D1	C309D1	
1 11/16	UCC309-111D1	5.1181	1 1/2	0.138	2.2441	0.866	UC309-111D1	C309D1	6.0
1 3/4	UCC309-112D1						UC309-112D1	C309D1	
50	UCC310D1	140	40	3.5	61	22	UC310D1	C310D1	3.3
1 13/16	UCC310-113D1						UC310-113D1	C310D1	
1 7/8	UCC310-114D1	5.5118	1 37/64	0.138	2.4016	0.866	UC310-114D1	C310D1	7.3
1 15/16	UCC310-115D1						UC310-115D1	C310D1	
55	UCC311D1	150	44	3.5	66	25	UC311D1	C311D1	4.0
2	UCC311-200D1						UC311-200D1	C311D1	
2 1/16	UCC311-201D1	5.9055	1 47/64	0.138	2.5984	0.984	UC311-201D1	C311D1	8.8
2 1/8	UCC311-202D1						UC311-202D1	C311D1	
2 3/16	UCC311-203D1						UC311-203D1	C311D1	

Remarks: 1) These numbers indicate relubricatable type. If maintenance free type is needed, please order without suffix "D1".
Note: Please refer to page 36 for size of grease fitting.

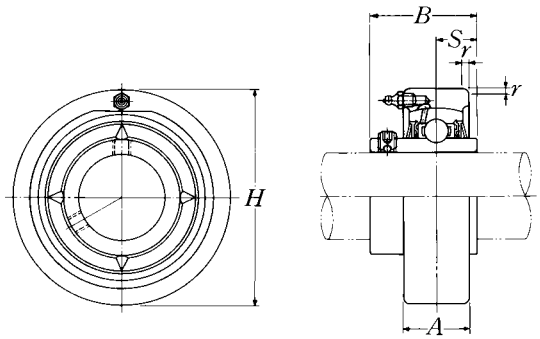

Shaft dia. mm / inch	Unit number [1]	Nominal dimensions mm / inch H	A	r	B	S	Bearing number	Housing [1] number	Mass of unit kg / lb
60	UCC312D1	160	46	3.5	71	26	UC312D1	C312D1	4.8
2 1/4	UCC312-204D1						UC312-204D1	C312D1	
2 5/16	UCC312-205D1	6.2992	1 13/16	0.138	2.7953	1.024	UC312-205D1	C312D1	11
2 3/8	UCC312-206D1						UC312-206D1	C312D1	
2 7/16	UCC312-207D1						UC312-207D1	C312D1	
65	UCC313D1	170	50	3.5	75	30	UC313D1	C313D1	5.8
2 1/2	UCC313-208D1	6.6929	1 31/32	0.138	2.9528	1.181	UC313-208D1	C313D1	13
2 9/16	UCC313-209D1						UC313-209D1	C313D1	
70	UCC314D1	180	52	4	78	33	UC314D1	C314D1	6.8
2 5/8	UCC314-210D1						UC314-210D1	C314D1	
2 11/16	UCC314-211D1	7.0866	2 3/64	0.157	3.0709	1.299	UC314-211D1	C314D1	15
2 3/4	UCC314-212D1						UC314-212D1	C314D1	
75	UCC315D1	190	55	4	82	32	UC315D1	C315D1	7.9
2 13/16	UCC315-213D1						UC315-213D1	C315D1	
2 7/8	UCC315-214D1	7.4803	2 11/64	0.157	3.2283	1.260	UC315-214D1	C315D1	17
2 15/16	UCC315-215D1						UC315-215D1	C315D1	
3	UCC315-300D1						UC315-300D1	C315D1	
80	UCC316D1	200	60	4	86	34	UC316D1	C316D1	9.3
3 1/16	UCC316-301D1						UC316-301D1	C316D1	
3 1/8	UCC316-302D1	7.8740	2 23/64	0.157	3.3858	1.339	UC316-302D1	C316D1	21
3 3/16	UCC316-303D1						UC316-303D1	C316D1	
85	UCC317D1	215	64	4	96	40	UC317D1	C317D1	11
3 1/4	UCC317-304D1						UC317-304D1	C317D1	
3 5/16	UCC317-305D1	8.4646	2 33/64	0.157	3.7795	1.575	UC317-305D1	C317D1	24
3 7/16	UCC317-307D1						UC317-307D1	C317D1	
90	UCC318D1	225	66	4	96	40	UC318D1	C318D1	13
3 1/2	UCC318-308D1	8.8583	2 19/32	0.157	3.7795	1.575	UC318-308D1	C318D1	29
95	UCC319D1	240	72	4	103	41	UC319D1	C319D1	16
3 5/8	UCC319-310D1						UC319-310D1	C319D1	
3 11/16	UCC319-311D1	9.4488	2 53/64	0.157	4.0551	1.614	UC319-311D1	C319D1	35
3 3/4	UCC319-312D1						UC319-312D1	C319D1	

Cartridge units cast housing
Set screw type

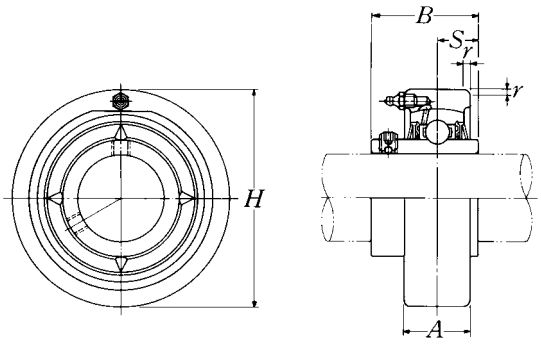

Shaft dia. mm inch	Unit number [1]	Nominal dimensions mm inch H	A	r	B	S	Bearing number	Housing [1] number	Mass of unit kg lb
100	UCC320D1	260	75	4	108	42	UC320D1	C320D1	20
3 13/16	UCC320-313D1						UC320-313D1	C320D1	
3 7/8	UCC320-314D1	10.2362	2 61/64	0.157	4.2520	1.654	UC320-314D1	C320D1	44
3 15/16	UCC320-315D1						UC320-315D1	C320D1	
4	UCC320-400D1						UC320-400D1	C320D1	
105	UCC321D1	260	75	4	112	44	UC321D1	C321D1	19
110	UCC322D1	300	80	5	117	46	UC322D1	C322D1	29
120	UCC324D1	320	90	5	126	51	UC324D1	C324D1	36
130	UCC326D1	340	100	5	135	54	UC326D1	C326D1	43
140	UCC328D1	360	100	5	145	59	UC328D1	C328D1	50

Remarks: 1) These numbers indicate relubricatable type. If maintenance free type is needed, please order without suffix "D1".
Note: Please refer to page 36 for size of grease fitting.

Cartridge units cast housing
Set screw type

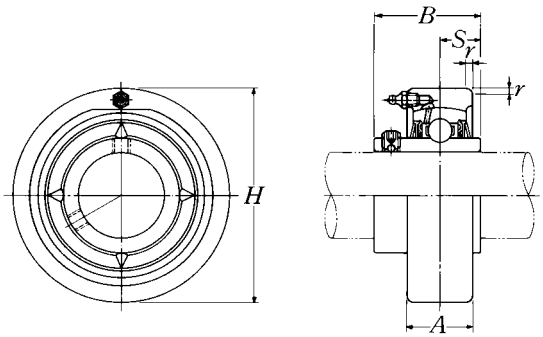

Shaft dia. mm / inch	Unit number [1]	Nominal dimensions mm / inch H	A	r	B	S	Bearing number	Housing [1] number	Mass of unit kg / lb
25	UCCX05D1	90	27	2	38.1	15.9	UCX05D1	CX05D1	1.1
13/16	UCCX05-013D1						UCX05-013D1	CX05D1	
7/8	UCCX05-014D1	3.5433	1 1/16	0.079	1.5000	0.626	UCX05-014D1	CX05D1	2.4
15/16	UCCX05-015D1						UCX05-015D1	CX05D1	
1	UCCX05-100D1						UCX05-100D1	CX05D1	
30	UCCX06D1	100	30	2.5	42.9	17.5	UCX06D1	CX06D1	1.6
1 1/16	UCCX06-101D1						UCX06-101D1	CX06D1	
1 1/8	UCCX06-102D1	3.9370	1 3/16	0.098	1.6890	0.689	UCX06-102D1	CX06D1	3.5
1 3/16	UCCX06-103D1						UCX06-103D1	CX06D1	
1 1/4	UCCX06-104D1						UC207-104D1	CX06D1	
35	UCCX07D1	110	34	2.5	49.2	19	UCX07D1	CX07D1	1.8
1 5/16	UCCX07-105D1						UCX07-105D1	CX07D1	
1 3/8	UCCX07-106D1	4.3307	1 11/32	0.098	1.9370	0.748	UCX07-106D1	CX07D1	4.0
1 7/16	UCCX07-107D1						UCX07-107D1	CX07D1	
40	UCCX08D1	120	38	2.5	49.2	19	UCX08D1	CX08D1	2.5
1 1/2	UCCX08-108D1	4.7244	1 1/2	0.098	1.9370	0.748	UCX08-108D1	CX08D1	5.5
1 9/16	UCCX08-109D1						UCX08-109D1	CX08D1	
45	UCCX09D1	120	38	2.5	51.6	19	UCX09D1	CX09D1	2.2
1 5/8	UCCX09-110D1						UCX09-110D1	CX09D1	
1 11/16	UCCX09-111D1	4.7244	1 1/2	0.098	2.0315	0.748	UCX09-111D1	CX09D1	4.9
1 3/4	UCCX09-112D1						UCX09-112D1	CX09D1	
1 13/16	UCCX09-113D1						UC210-113D1	CX09D1	
50	UCCX10D1	130	40	2.5	55.6	22.2	UCX10D1	CX10D1	2.7
1 7/8	UCCX10-114D1						UCX10-114D1	CX10D1	
1 15/16	UCCX10-115D1	5.1181	1 37/64	0.098	2.1890	0.874	UCX10-115D1	CX10D1	6.0
2	UCCX10-200D1						UC211-200D1	CX10D1	

Remarks: 1) These numbers indicate relubricatable type. If maintenance free type is needed, please order without suffix "D1".
Note: Please refer to page 36 for size of grease fitting.

Cartridge units cast housing
Set screw type

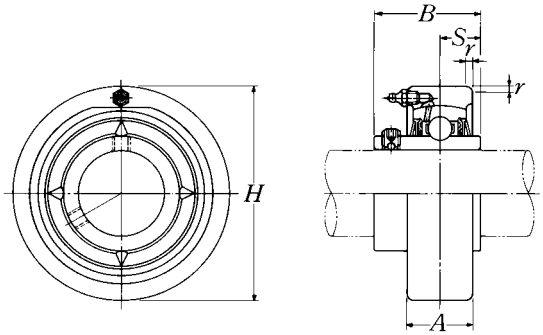

Shaft dia. mm / inch	Unit number [1]	Nominal dimensions mm / inch H	A	r	B	S	Bearing number	Housing [1] number	Mass of unit kg / lb
55	UCCX11D1	150	42	3	65.1	25.4	UCX11D1	CX11D1	4.1
2 1/16	UCCX11-201D1						UCX11-201D1	CX11D1	
2 1/8	UCCX11-202D1						UCX11-202D1	CX11D1	
2 3/16	UCCX11-203D1	5.9055	1 21/32	0.118	2.5630	1.000	UCX11-203D1	CX11D1	9.0
2 1/4	UCCX11-204D1						UC212-204D1	CX11D1	
2 5/16	UCCX11-205D1						UC212-205D1	CX11D1	
60	UCCX12D1	160	44	3	65.1	25.4	UCX12D1	CX12D1	3.9
2 3/8	UCCX12-206D1	6.2992	1 47/64	0.118	2.5630	1.000	UCX12-206D1	CX12D1	8.6
2 7/16	UCCX12-207D1						UCX12-207D1	CX12D1	

Remarks: 1) These numbers indicate relubricatable type. If maintenance free type is needed, please order without suffix "D1".
Note: Please refer to page 36 for size of grease fitting.

Mini stretcher units®
Set screw type

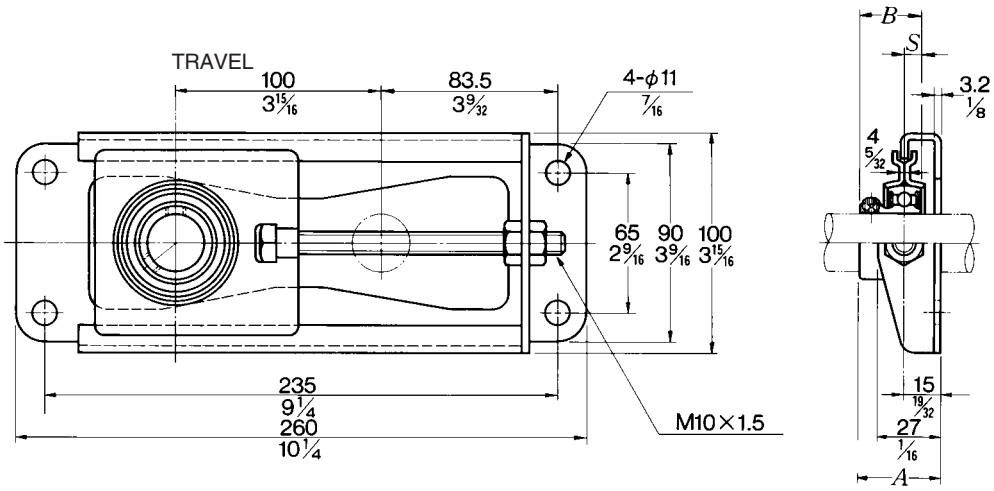

Shaft dia. mm / inch	Unit number	Nominal dimensions mm / inch A	B	S	Bolt size mm / inch	Max. load 1) recommended N / lbf	Bearing number	Mass of unit kg / lb
12	**ASPT201-10**	31	22	6	M10	3 500	AS201	1.1
1/2	**ASPT201-008-10**	1 7/32	0.8661	0.236	3/8	770	AS201-008	2.4
15	**ASPT202-10**	31	22	6	M10	3 500	AS202	1.1
9/16	**ASPT202-009-10**	1 7/32	0.8661	0.236	3/8	770	AS202-009	2.4
5/8	**ASPT202-010-10**						AS202-010	
17	**ASPT203-10**	31	22	6	M10	3 500	AS203	1.1
11/16	**ASPT203-011-10**	1 7/32	0.8661	0.236	3/8	770	AS203-011	2.4
20	**ASPT204-10**	33	25	7	M10	3 500	AS204	1.1
3/4	**ASPT204-012-10**	1 19/64	0.9843	0.276	3/8	770	AS204-012	2.4
25	**ASPT205-10**	34.5	27	7.5	M10	3 500	AS205	1.1
13/16	**ASPT205-013-10**						AS205-013	
7/8	**ASPT205-014-10**	1 23/64	1.0630	0.295	3/8	770	AS205-014	2.4
15/16	**ASPT205-015-10**						AS205-015	
1	**ASPT205-100-10**						AS205-100	

Remarks: 1) The Stretcher Unit is designed to only take a horizontal radial load, in line with the adjustment direction. Axial loads or vertical radical loads can deform or break the housing.

Pillow blocks cast housing
Eccentric locking collar type

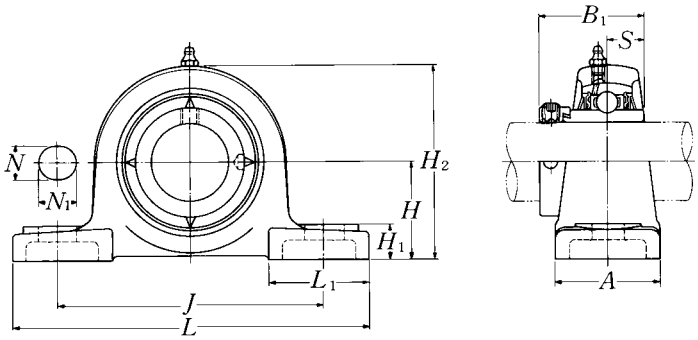

Shaft dia. mm / inch	Unit number [1]	Nominal dimensions mm / inch H	L	J	A	N	N1	H1	H2	L1	B1	S	Bolt size mm / inch
20	UELP204D1W3	33.3	127	95	38	13	16	14	65	42	43.7	17.1	M10
3/4	UELP204-012D1W3	1 5/16	5	3 3/4	1 1/2	1/2	5/8	9/16	2 9/16	1 21/32	1.720	0.673	3/8
25	UELP205D1W3	36.5	140	105	38	13	16	15	71	42	44.4	17.45	M10
13/16	UELP205-013D1W3												
7/8	UELP205-014D1W3	1 7/16	5 1/2	4 1/8	1 1/2	1/2	5/8	19/32	2 25/32	1 21/32	1.748	0.687	3/8
15/16	UELP205-015D1W3												
1	UELP205-100D1W3												
30	UELP206D1W3	42.9	165	121	48	17	20	17	83	54	48.4	18.25	M14
1 1/16	UELP206-101D1W3												
1 1/8	UELP206-102D1W3	1 11/16	6 1/2	4 3/4	1 7/8	21/32	25/32	21/32	3 9/32	2 1/8	1.906	0.719	1/2
1 3/16	UELP206-103D1W3												
1 1/4	UELP206-104D1W3												
35	UELP207D1W3	47.6	167	127	48	17	20	18	93	54	51.1	18.8	M14
1 1/4	UELP207-104D1W3												
1 5/16	UELP207-105D1W3	1 7/8	6 9/16	5	1 7/8	21/32	25/32	23/32	3 21/32	2 1/8	2.012	0.740	1/2
1 3/8	UELP207-106D1W3												
1 7/16	UELP207-107D1W3												
40	UELP208D1W3	49.2	184	137	54	17	20	18	98	52	56.3	21.4	M14
1 1/2	UELP208-108D1W3	1 15/16	7 1/4	5 13/32	2 1/8	21/32	25/32	23/32	3 27/32	2 1/16	2.217	0.843	1/2
1 9/16	UELP208-109D1W3												
45	UELP209D1W3	54	190	146	54	17	20	20	106	60	56.3	21.4	M14
1 5/8	UELP209-110D1W3												
1 11/16	UELP209-111D1W3	2 1/8	7 15/32	5 3/4	2 1/8	21/32	25/32	25/32	4 3/16	2 3/8	2.217	0.843	1/2
1 3/4	UELP209-112D1W3												
50	UELP210D1W3	57.2	206	159	60	20	23	21	114	65	62.7	24.6	M16
1 13/16	UELP210-113D1W3												
1 7/8	UELP210-114D1W3	2 1/4	8 1/8	6 1/4	2 3/8	25/32	29/32	13/16	4 1/2	2 9/16	2.469	0.969	5/8
1 15/16	UELP210-115D1W3												
2	UELP210-200D1W3												

Remarks: 1) These numbers indicate relubricatable type. If maintenance free type is needed, please order without suffix "D1".
Note: Please refer to page 36 for size of grease fitting.

Bearing number	Housing [1] number	Mass of unit kg lb
UEL204D1W3	P204D1	0.8
UEL204-012D1W3	P204D1	1.8
UEL205D1W3	P205D1	0.9
UEL205-013D1W3	P205D1	2.0
UEL205-014D1W3	P205D1	
UEL205-015D1W3	P205D1	
UEL205-100D1W3	P205D1	
UEL206D1W3	P206D1	1.5
UEL206-101D1W3	P206D1	3.3
UEL206-102D1W3	P206D1	
UEL206-103D1W3	P206D1	
UEL206-104D1W3	P206D1	
UEL207D1W3	P207D1	1.8
UEL207-104D1W3	P207D1	4.0
UEL207-105D1W3	P207D1	
UEL207-106D1W3	P207D1	
UEL207-107D1W3	P207D1	
UEL208D1W3	P208D1	2.1
UEL208-108D1W3	P208D1	4.6
UEL208-109D1W3	P208D1	
UEL209D1W3	P209D1	2.3
UEL209-110D1W3	P209D1	5.1
UEL209-111D1W3	P209D1	
UEL209-112D1W3	P209D1	
UEL210D1W3	P210D1	2.9
UEL210-113D1W3	P210D1	6.4
UEL210-114D1W3	P210D1	
UEL210-115D1W3	P210D1	
UEL210-200D1W3	P210D1	

Pillow blocks cast housing
Eccentric locking collar type

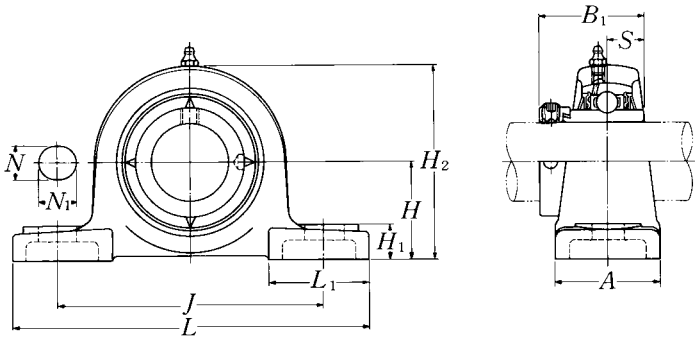

Shaft dia. mm / inch	Unit number [1]	Nominal dimensions mm / inch H	L	J	A	N	N1	H1	H2	L1	B1	S	Bolt size mm / inch
55	UELP211D1W3	63.5	219	171	60	20	23	23	126	65	71.4	27.75	M16
2	UELP211-200D1W3												
2 1/16	UELP211-201D1W3	2 1/2	8 5/8	6 23/32	2 3/8	25/32	29/32	29/32	4 31/32	2 9/16	2.811	1.093	5/8
2 1/8	UELP211-202D1W3												
2 3/16	UELP211-203D1W3												
60	UELP212D1W3	69.8	241	184	70	20	23	25	138	70	77.8	30.95	M16
2 1/4	UELP212-204D1W3												
2 5/16	UELP212-205D1W3	2 3/4	9 1/2	7 1/4	2 3/4	25/32	29/32	31/32	5 7/16	2 3/4	3.063	1.219	5/8
2 3/8	UELP212-206D1W3												
2 7/16	UELP212-207D1W3												
65	UELP213D1W3	76.2	265	203	70	25	28	27	151	77	85.7	34.15	M20
2 1/2	UELP213-208D1W3	3	10 7/16	8	2 3/4	31/32	1 3/32	1 1/16	5 15/16	3 1/32	3.374	1.344	3/4
2 9/16	UELP213-209D1W3												
70	UELP214D1W3	79.4	266	210	72	25	28	27	157	77	85.7	34.15	M20
2 5/8	UELP214-210D1W3												
2 11/16	UELP214-211D1W3	3 1/8	10 15/32	8 9/32	2 27/32	31/32	1 3/32	1 1/16	6 3/16	3 1/32	3.374	1.344	3/4
2 3/4	UELP214-212D1W3												
75	UELP215D1W3	82.6	275	217	74	25	28	28	163	80	92	37.3	M20
2 13/16	UELP215-213D1W3												
2 7/8	UELP215-214D1W3	3 1/4	10 13/16	8 17/32	2 29/32	31/32	1 3/32	1 3/32	6 13/32	3 5/32	3.622	1.469	3/4
2 15/16	UELP215-215D1W3												
3	UELP215-300D1W3												

Remarks: 1) These numbers indicate relubricatable type. If maintenance free type is needed, please order without suffix "D1".
Note: Please refer to page 36 for size of grease fitting.

Bearing number	Housing [1)] number	Mass of unit kg	lb
UEL211D1W3	P211D1	3.7	
UEL211-200D1W3	P211D1		
UEL211-201D1W3	P211D1	8.2	
UEL211-202D1W3	P211D1		
UEL211-203D1W3	P211D1		
UEL212D1W3	P212D1	5.0	
UEL212-204D1W3	P212D1		
UEL212-205D1W3	P212D1	11	
UEL212-206D1W3	P212D1		
UEL212-207D1W3	P212D1		
UEL213D1W3	P213D1	6.2	
UEL213-208D1W3	P213D1	14	
UEL213-209D1W3	P213D1		
UEL214D1W3	P214D1	6.9	
UEL214-210D1W3	P214D1		
UEL214-211D1W3	P214D1	15	
UEL214-212D1W3	P214D1		
UEL215D1W3	P215D1	7.6	
UEL215-213D1W3	P215D1		
UEL215-214D1W3	P215D1	17	
UEL215-215D1W3	P215D1		
UEL215-300D1W3	P215D1		

Pillow blocks cast housing
Eccentric locking collar type

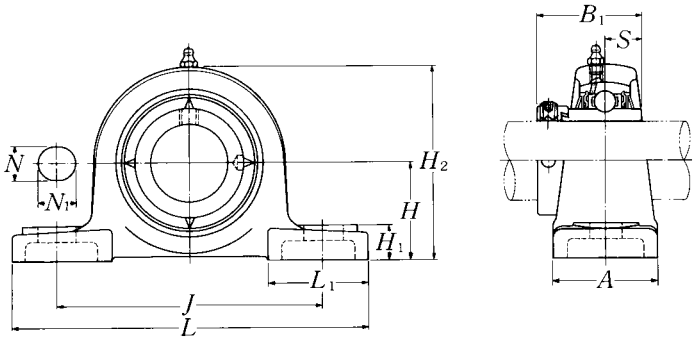

Shaft dia. mm / inch	Unit number [1]	Nominal dimensions mm / inch H	L	J	A	N	N1	H1	H2	L1	B1	S	Bolt size mm / inch
25	UELP305D1W3	45	175	132	45	17	20	15	85	54	46.8	16.7	M14
13/16	UELP305-013D1W3												
7/8	UELP305-014D1W3	1 49/64	6 7/8	5 3/16	1 25/32	21/32	25/32	19/32	3 11/32	2 1/8	1.843	0.657	1/2
15/16	UELP305-015D1W3												
1	UELP305-100D1W3												
30	UELP306D1W3	50	180	140	50	17	20	18	95	54	50	17.5	M14
1 1/16	UELP306-101D1W3												
1 1/8	UELP306-102D1W3	1 31/32	7 3/32	5 1/2	1 31/32	21/32	25/32	23/32	3 3/4	2 1/8	1.969	0.689	1/2
1 3/16	UELP306-103D1W3												
35	UELP307D1W3	56	210	160	56	17	25	20	106	60	51.6	18.3	M14
1 1/4	UELP307-104D1W3												
1 5/16	UELP307-105D1W3	2 13/64	8 9/32	6 5/16	2 7/32	21/32	31/32	25/32	4 3/16	2 3/8	2.031	0.720	1/2
1 3/8	UELP307-106D1W3												
1 7/16	UELP307-107D1W3												
40	UELP308D1W3	60	220	170	60	17	27	22	116	60	57.1	19.8	M14
1 1/2	UELP308-108D1W3	2 23/64	8 21/32	6 11/16	2 3/8	21/32	1 1/16	7/8	4 9/16	2 3/8	2.248	0.780	1/2
1 9/16	UELP308-109D1W3												
45	UELP309D1W3	67	245	190	67	20	30	24	129	65	58.7	19.8	M16
1 5/8	UELP309-110D1W3												
1 11/16	UELP309-111D1W3	2 41/64	9 21/32	7 15/32	2 5/8	25/32	1 3/16	15/16	5 3/32	2 9/16	2.311	0.780	5/8
1 3/4	UELP309-112D1W3												
50	UELP310D1W3	75	275	212	75	20	35	27	143	75	66.6	24.6	M16
1 13/16	UELP310-113D1W3												
1 7/8	UELP310-114D1W3	2 61/64	10 13/16	8 11/32	2 15/16	25/32	1 3/8	1 1/16	5 5/8	2 15/16	2.622	0.969	5/8
1 15/16	UELP310-115D1W3												
55	UELP311D1W3	80	310	236	80	20	38	30	154	85	73	27.8	M16
2	UELP311-200D1W3												
2 1/16	UELP311-201D1W3	3 5/32	12 7/32	9 9/32	3 5/32	25/32	1 1/2	1 3/16	6 1/16	3 11/32	2.874	1.094	5/8
2 1/8	UELP311-202D1W3												
2 3/16	UELP311-203D1W3												

Remarks: 1) These numbers indicate relubricatable type. If maintenance free type is needed, please order without suffix "D1".
Note: Please refer to page 36 for size of grease fitting.

Bearing number	Housing [1)] number	Mass of unit kg lb
UEL305D1W3	P305D1	1.5
UEL305-013D1W3	P305D1	
UEL305-014D1W3	P305D1	3.3
UEL305-015D1W3	P305D1	
UEL305-100D1W3	P305D1	
UEL306D1W3	P306D1	1.9
UEL306-101D1W3	P306D1	
UEL306-102D1W3	P306D1	4.2
UEL306-103D1W3	P306D1	
UEL307D1W3	P307D1	2.6
UEL307-104D1W3	P307D1	
UEL307-105D1W3	P307D1	5.7
UEL307-106D1W3	P307D1	
UEL307-107D1W3	P307D1	
UEL308D1W3	P308D1	3.2
UEL308-108D1W3	P308D1	7.1
UEL308-109D1W3	P308D1	
UEL309D1W3	P309D1	4.2
UEL309-110D1W3	P309D1	
UEL309-111D1W3	P309D1	9.3
UEL309-112D1W3	P309D1	
UEL310D1W3	P310D1	5.8
UEL310-113D1W3	P310D1	
UEL310-114D1W3	P310D1	13
UEL310-115D1W3	P310D1	
UEL311D1W3	P311D1	7.6
UEL311-200D1W3	P311D1	
UEL311-201D1W3	P311D1	17
UEL311-202D1W3	P311D1	
UEL311-203D1W3	P311D1	

Pillow blocks cast housing
Eccentric locking collar type

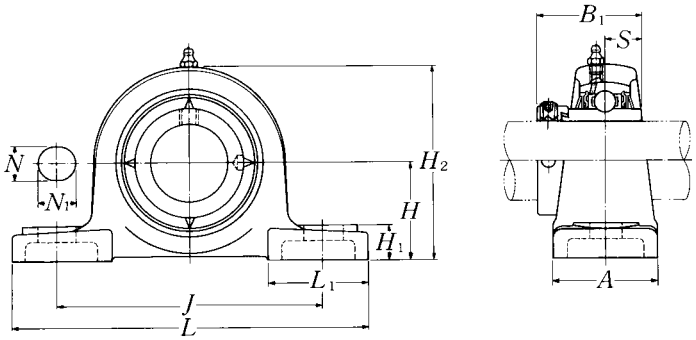

Shaft dia. mm / inch	Unit number [1]	Nominal dimensions mm / inch H	L	J	A	N	N1	H1	H2	L1	B1	S	Bolt size mm / inch
60	UELP312D1W3	85	330	250	85	25	38	32	165	95	79.4	30.95	M20
2 1/4	UELP312-204D1W3												
2 5/16	UELP312-205D1W3	3 11/32	13	9 27/32	3 11/32	31/32	1 1/2	1 1/4	6 1/2	3 3/4	3.126	1.219	3/4
2 3/8	UELP312-206D1W3												
2 7/16	UELP312-207D1W3												
65	UELP313D1W3	90	340	260	90	25	38	33	176	105	85.7	32.55	M20
2 1/2	UELP313-208D1W3	3 35/64	13 3/8	10 1/4	3 17/32	31/32	1 1/2	1 5/16	6 15/16	4 1/8	3.374	1.281	3/4
2 9/16	UELP313-209D1W3												
70	UELP314D1W3	95	360	280	90	27	40	35	187	105	92.1	34.15	M22
2 5/8	UELP314-210D1W3												
2 11/16	UELP314-211D1W3	3 47/64	14 3/16	11 1/32	3 17/32	1 1/16	1 9/16	1 3/8	7 3/8	4 1/8	3.626	1.344	7/8
2 3/4	UELP314-212D1W3												
75	UELP315D1W3	100	380	290	100	27	40	35	198	110	100	37.3	M22
2 13/16	UELP315-213D1W3												
2 7/8	UELP315-214D1W3	3 15/16	14 31/32	11 13/32	3 15/16	1 1/16	1 9/16	1 3/8	7 25/32	4 11/32	3.937	1.469	7/8
2 15/16	UELP315-215D1W3												
3	UELP315-300D1W3												
80	UELP316D1W3	106	400	300	110	27	40	40	210	110	106.4	40.5	M22
3 1/16	UELP316-301D1W3												
3 1/8	UELP316-302D1W3	4 11/64	15 3/4	11 13/16	4 11/32	1 1/16	1 9/16	1 9/16	8 9/32	4 11/32	4.189	1.594	7/8
3 3/16	UELP316-303D1W3												
85	UELP317D1W3	112	420	320	110	33	45	40	220	120	109.5	42.05	M27
3 1/4	UELP317-304D1W3												
3 5/16	UELP317-305D1W3	4 13/32	16 17/32	12 19/32	4 11/32	1 5/16	1 25/32	1 9/16	8 21/32	4 23/32	4.311	1.656	1
3 7/16	UELP317-307D1W3												
90	UELP318D1W3	118	430	330	110	33	45	45	235	120	115.9	43.65	M27
3 7/16	UELP318-307D1W3	4 41/64	16 15/16	13	4 11/32	1 5/16	1 25/32	1 25/32	9 1/4	4 23/32	4.563	1.719	1
3 1/2	UELP318-308D1W3												

Remarks: 1) These numbers indicate relubricatable type. If maintenance free type is needed, please order without suffix "D1".
Note: Please refer to page 36 for size of grease fitting.

Bearing number	Housing [1] number	Mass of unit kg	lb
UEL312D1W3	P312D1	9.7	
UEL312-204D1W3	P312D1		
UEL312-205D1W3	P312D1	21	
UEL312-206D1W3	P312D1		
UEL312-207D1W3	P312D1		
UEL313D1W3	P313D1	11	
UEL313-208D1W3	P313D1	24	
UEL313-209D1W3	P313D1		
UEL314D1W3	P314D1	12	
UEL314-210D1W3	P314D1		
UEL314-211D1W3	P314D1	26	
UEL314-212D1W3	P314D1		
UEL315D1W3	P315D1	15	
UEL315-213D1W3	P315D1		
UEL315-214D1W3	P315D1	33	
UEL315-215D1W3	P315D1		
UEL315-300D1W3	P315D1		
UEL316D1W3	P316D1	18	
UEL316-301D1W3	P316D1		
UEL316-302D1W3	P316D1	40	
UEL316-303D1W3	P316D1		
UEL317D1W3	P317D1	21	
UEL317-304D1W3	P317D1		
UEL317-305D1W3	P317D1	46	
UEL317-307D1W3	P317D1		
UEL318D1W3	P318D1	23	
UEL318-307D1W3	P318D1	51	
UEL318-308D1W3	P318D1		

Pillow blocks cast housing
Eccentric locking collar type

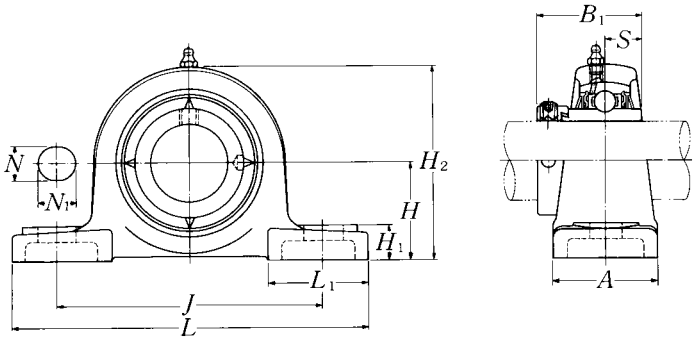

Shaft dia. mm / inch	Unit number [1]	Nominal dimensions mm / inch H	L	J	A	N	N1	H1	H2	L1	B1	S	Bolt size mm / inch
95	UELP319D1W3	125	470	360	120	36	50	45	250	125	122.3	38.9	M30
3 5/8	UELP319-310D1W3												
3 11/16	UELP319-311D1W3	4 59/64	18 1/2	14 3/16	4 23/32	1 13/32	1 31/32	1 25/32	9 27/32	4 29/32	4.815	1.531	1 1/8
3 3/4	UELP319-312D1W3												
100	UELP320D1W3	140	490	380	120	36	50	50	275	130	128.6	50	M30
3 13/16	UELP320-313D1W3												
3 7/8	UELP320-314D1W3	5 33/64	19 9/32	14 31/32	4 23/32	1 13/32	1 31/32	1 31/32	10 13/16	5 1/8	5.063	1.969	1 1/8
3 15/16	UELP320-315D1W3												
4	UELP320-400D1W3												
105	UELP321D1W3	140	490	380	120	36	50	50	280	130	139.7	48.4	M30
110	UELP322D1W3	150	520	400	140	40	55	55	300	135	141.3	49.2	M33

Remarks: 1) These numbers indicate relubricatable type. If maintenance free type is needed, please order without suffix "D1".
Note: Please refer to page 36 for size of grease fitting.

Bearing number	Housing [1)] number	Mass of unit kg lb
UEL319D1W3	P319D1	28
UEL319-310D1W3	P319D1	
UEL319-311D1W3	P319D1	66
UEL319-312D1W3	P319D1	
UEL320D1W3	P320D1	35
UEL320-313D1W3	P320D1	
UEL320-314D1W3	P320D1	82
UEL320-315D1W3	P320D1	
UEL320-400D1W3	P320D1	
UEL321D1W3	P321D1	37
UEL322D1W3	P322D1	46

Pillow blocks cast housing low center height
Eccentric locking collar type

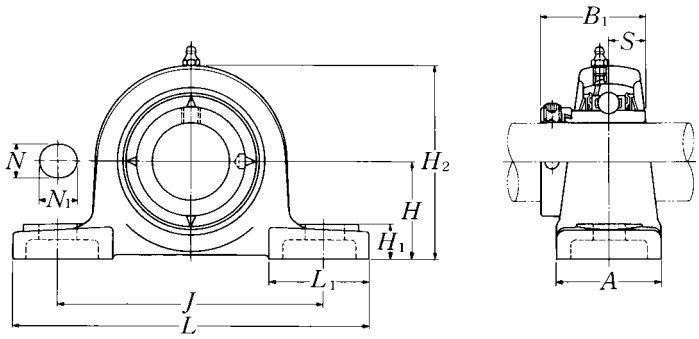

Shaft dia. mm / inch	Unit number 1)2)3)	Nominal dimensions											Bolt size mm / inch
		mm						inch					
		H	L	J	A	N	N1	H1	H2	L1	B1	S	
20	UELPL204D1W3	31.75	127	95	38	13	16	14	64	42	43.7	17.1	M10
3/4	UELPL204-012D1W3	1 1/4	5	3 3/4	1 1/2	1/2	5/8	9/16	2 17/32	1 21/32	1.720	0.673	3/8
25	UELPL205D1W3	33.34	140	105	38	13	16	15	68	42	44.4	17.45	M10
13/16	UELPL205-013D1W3												
7/8	UELPL205-014D1W3	1 5/16	5 1/2	4 1/8	1 1/2	1/2	5/8	19/32	2 11/16	1 21/32	1.748	0.687	3/8
15/16	UELPL205-015D1W3												
1	UELPL205-100D1W3												
30	UELPL206D1W3	39.69	165	121	48	17	20	17	80	54	48.4	18.25	M14
1 1/16	UELPL206-101D1W3												
1 1/8	UELPL206-102D1W3	1 9/16	6 1/2	4 3/4	1 7/8	21/32	25/32	21/32	3 5/32	2 1/8	1.906	0.719	1/2
1 3/16	UELPL206-103D1W3												
1 1/4	UELPL206-104D1W3												
35	UELPL207D1W3	46.04	167	127	48	17	20	18	91	54	51.1	18.8	M14
1 1/4	UELPL207-104D1W3												
1 5/16	UELPL207-105D1W3	1 13/16	6 9/16	5	1 7/8	21/32	25/32	23/32	3 19/32	2 1/8	2.012	0.740	1/2
1 3/8	UELPL207-106D1W3												
1 7/16	UELPL207-107D1W3												
45	UELPL209D1W3	52.39	190	146	54	17	20	20	104	60	56.3	21.4	M14
1 5/8	UELPL209-110D1W3												
1 11/16	UELPL209-111D1W3	2 1/16	7 15/32	5 3/4	2 1/8	21/32	25/32	25/32	4 3/32	2 3/8	2.217	0.843	1/2
1 3/4	UELPL209-112D1W3												
50	UELPL210D1W3	55.56	206	159	60	20	23	21	112	65	62.7	24.6	M16
1 13/16	UELPL210-113D1W3												
1 7/8	UELPL210-114D1W3	2 3/16	8 1/8	6 1/4	2 3/8	25/32	29/32	13/16	4 13/32	2 9/16	2.469	0.969	5/8
1 15/16	UELPL210-115D1W3												
2	UELPL210-200D1W3												

Remarks: 1) These numbers indicate relubricatable type. If maintenance free type is needed, please order without suffix "D1"
2) UELPL204 and UELPL205 has solid bases.
3) UELPL208 has the same dimension as UELP208 shown in page 230

Note: Please refer to page 36 for size of grease fitting.

Bearing number	Housing [1] number	Mass of unit kg	lb
UEL204D1W3	PL204D1	0.8	
UEL204-012D1W3	PL204D1	1.8	
UEL205D1W3	PL205D1	0.9	
UEL205-013D1W3	PL205D1	2.0	
UEL205-014D1W3	PL205D1		
UEL205-015D1W3	PL205D1		
UEL205-100D1W3	PL205D1		
UEL206D1W3	PL206D1	1.4	
UEL206-101D1W3	PL206D1	3.1	
UEL206-102D1W3	PL206D1		
UEL206-103D1W3	PL206D1		
UEL206-104D1W3	PL206D1		
UEL207D1W3	PL207D1	1.7	
UEL207-104D1W3	PL207D1	3.7	
UEL207-105D1W3	PL207D1		
UEL207-106D1W3	PL207D1		
UEL207-107D1W3	PL207D1		
UEL209D1W3	PL209D1	2.3	
UEL209-110D1W3	PL209D1	5.1	
UEL209-111D1W3	PL209D1		
UEL209-112D1W3	PL209D1		
UEL210D1W3	PL210D1	3.0	
UEL210-113D1W3	PL210D1	6.6	
UEL210-114D1W3	PL210D1		
UEL210-115D1W3	PL210D1		
UEL210-200D1W3	PL210D1		

Pillow blocks cast housing low center height
Eccentric locking collar type

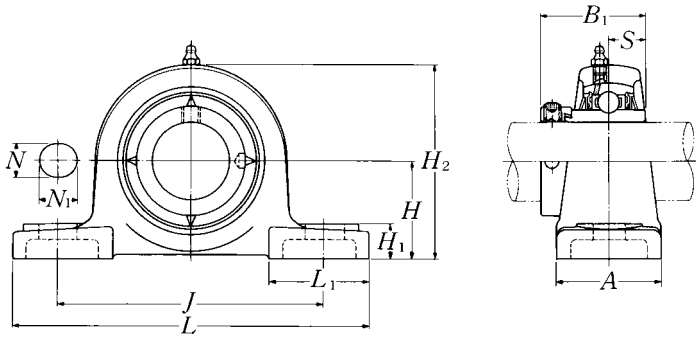

Shaft dia. mm / inch	Unit number 1)2)3)	Nominal dimensions											Bolt size mm / inch
		mm						inch					
		H	L	J	A	N	N_1	H_1	H_2	L_1	B_1	S	
55	UELPL211D1W3	61.91	219	171	60	20	23	23	124	65	71.4	27.75	M16
2	UELPL211-200D1W3												
2 1/16	UELPL211-201D1W3	2 7/16	8 5/8	6 23/32	2 3/8	25/32	29/32	29/32	4 7/8	2 9/16	2.811	1.093	5/8
2 1/8	UELPL211-202D1W3												
2 3/16	UELPL211-203D1W3												
60	UELPL212D1W3	68.26	241	184	70	20	23	25	136	70	77.8	30.95	M16
2 1/4	UELPL212-204D1W3												
2 5/16	UELPL212-205D1W3	2 11/16	9 1/2	7 1/4	2 3/4	25/32	29/32	31/32	5 11/32	2 3/4	3.063	1.219	5/8
2 3/8	UELPL212-206D1W3												
2 7/16	UELPL212-207D1W3												

Remarks: 1) These numbers indicate relubricatable type. If maintenance free type is needed, please order without suffix "D1".
Note: Please refer to page 36 for size of grease fitting.

Bearing number	Housing [1)] number	Mass of unit kg lb
UEL211D1W3	PL211D1	3.7
UEL211-200D1W3	PL211D1	8.2
UEL211-201D1W3	PL211D1	
UEL211-202D1W3	PL211D1	
UEL211-203D1W3	PL211D1	
UEL212D1W3	PL212D1	5.0
UEL212-204D1W3	PL212D1	11
UEL212-205D1W3	PL212D1	
UEL212-206D1W3	PL212D1	
UEL212-207D1W3	PL212D1	

Pillow blocks cast housing high center height
Eccentric locking collar type

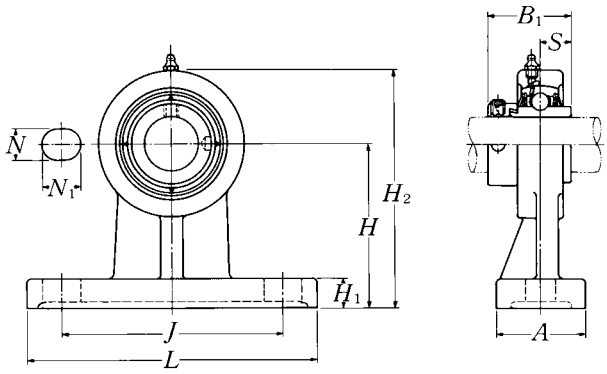

Shaft dia. mm / inch	Unit number [1]	Nominal dimensions H	L	J	A	N (mm / inch)	N1	H1	H2	B1	S	Bolt size mm / inch	Bearing number
20	UELHP204D1W3	70	127	95	40	13	19	13	101	43.7	17.1	M10	UEL204D1W3
3/4	UELHP204-012D1W3	2 3/4	5	3 3/4	1 9/16	1/2	3/4	1/2	3 31/32	1.720	0.673	3/8	UEL204-012D1W3
25	UELHP205D1W3	80	142	105	50	13	19	13	114	44.4	17.45	M10	UEL205D1W3
13/16	UELHP205-013D1W3												UEL205-013D1W3
7/8	UELHP205-014D1W3	3 5/32	5 19/32	4 1/8	1 31/32	1/2	3/4	1/2	4 1/2	1.748	0.687	3/8	UEL205-014D1W3
15/16	UELHP205-015D1W3												UEL205-015D1W3
1	UELHP205-100D1W3												UEL205-100D1W3
30	UELHP206D1W3	90	165	120	50	17	21	16	130	48.4	18.25	M14	UEL206D1W3
1 1/16	UELHP206-101D1W3												UEL206-101D1W3
1 1/8	UELHP206-102D1W3	3 35/64	6 1/2	4 23/32	1 31/32	21/32	13/16	5/8	5 1/8	1.906	0.719	1/2	UEL206-102D1W3
1 3/16	UELHP206-103D1W3												UEL206-103D1W3
1 1/4	UELHP206-104D1W3												UEL206-104D1W3
35	UELHP207D1W3	95	166	127	60	17	21	18	140	51.1	18.8	M14	UEL207D1W3
1 1/4	UELHP207-104D1W3												UEL207-104D1W3
1 5/16	UELHP207-105D1W3	3 47/64	6 17/32	5	2 3/8	21/32	13/16	23/32	5 1/2	2.012	0.740	1/2	UEL207-105D1W3
1 3/8	UELHP207-106D1W3												UEL207-106D1W3
1 7/16	UELHP207-107D1W3												UEL207-107D1W3
40	UELHP208D1W3	100	184	136	70	17	21	20	150	56.3	21.4	M14	UEL208D1W3
1 1/2	UELHP208-108D1W3	3 15/16	7 1/4	5 11/32	2 3/4	21/32	13/16	25/32	5 29/32	2.217	0.843	1/2	UEL208-108D1W3
1 9/16	UELHP208-109D1W3												UEL208-109D1W3
45	UELHP209D1W3	105	190	146	70	17	22	20	158	56.3	21.4	M14	UEL209D1W3
1 5/8	UELHP209-110D1W3												UEL209-110D1W3
1 11/16	UELHP209-111D1W3	4 9/64	7 15/32	5 3/4	2 3/4	21/32	7/8	25/32	6 7/32	2.217	0.843	1/2	UEL209-111D1W3
1 3/4	UELHP209-112D1W3												UEL209-112D1W3
50	UELHP210D1W3	110	206	159	70	20	22	22	165	62.7	24.6	M16	UEL210D1W3
1 13/16	UELHP210-113D1W3												UEL210-113D1W3
1 7/8	UELHP210-114D1W3	4 21/64	8 1/8	6 1/4	2 3/4	25/32	7/8	7/8	6 1/2	2.469	0.969	5/8	UEL210-114D1W3
1 15/16	UELHP210-115D1W3												UEL210-115D1W3
2	UELHP210-200D1W3												UEL210-200D1W3

Remarks: 1) These numbers indicate relubricatable type. If maintenance free type is needed, please order without suffix "D1".
Note: Please refer to page 36 for size of grease fitting.

Housing [1)] number	Mass of unit kg	lb
HP204D1	0.9	
HP204D1		2.0
HP205D1	1.3	
HP205D1		
HP205D1		2.9
HP205D1		
HP205D1		
HP206D1	1.9	
HP206D1		
HP206D1		4.2
HP206D1		
HP206D1		
HP207D1	2.4	
HP207D1		
HP207D1		5.3
HP207D1		
HP207D1		
HP208D1	3.3	
HP208D1		7.3
HP208D1		
HP209D1	3.7	
HP209D1		
HP209D1		8.2
HP209D1		
HP210D1	4.1	
HP210D1		
HP210D1		9.0
HP210D1		
HP210D1		

Narrow pillow blocks cast housing
Eccentric locking collar type

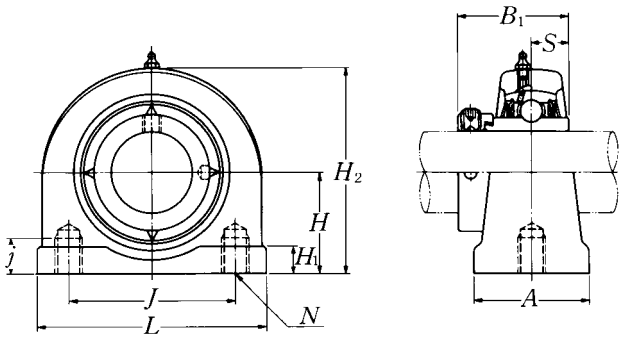

Shaft dia. mm / inch	Unit number 1)	Nominal dimensions (mm / inch) H	L	J	A	j	H1	H2	B1	S	N	Bearing number
20	UELUP204D1W3	30.2	76	52	38	13	11	62	43.7	17.1	M10 × 1.5	UEL204D1W3
3/4	UELUP204-012D1W3	1 3/16	3	2 1/16	1 1/2	1/2	7/16	2 7/16	1.720	0.673	M10 × 1.5	UEL204-012D1W3
25	UELUP205D1W3	36.5	84	56	38	15	12	72	44.4	17.45	M10 × 1.5	UEL205D1W3
13/16	UELUP205-013D1W3											UEL205-013D1W3
7/8	UELUP205-014D1W3	1 7/16	3 5/16	2 7/32	1 1/2	19/32	15/32	2 27/32	1.748	0.687	M10 × 1.5	UEL205-014D1W3
15/16	UELUP205-015D1W3											UEL205-015D1W3
1	UELUP205-100D1W3											UEL205-100D1W3
30	UELUP206D1W3	42.9	94	66	48	18	12	84	48.4	18.25	M14 × 2	UEL206D1W3
1 1/16	UELUP206-101D1W3											UEL206-101D1W3
1 1/8	UELUP206-102D1W3	1 11/16	3 11/16	2 19/32	1 7/8	23/32	15/32	3 5/16	1.906	0.719	M14 × 2	UEL206-102D1W3
1 3/16	UELUP206-103D1W3											UEL206-103D1W3
1 1/4	UELUP206-104D1W3											UEL206-104D1W3
35	UELUP207D1W3	47.6	110	80	48	20	13	95	51.1	18.8	M14 × 2	UEL207D1W3
1 1/4	UELUP207-104D1W3											UEL207-104D1W3
1 5/16	UELUP207-105D1W3	1 7/8	4 11/32	3 5/32	1 7/8	25/32	1/2	3 3/4	2.012	0.740	M14 × 2	UEL207-105D1W3
1 3/8	UELUP207-106D1W3											UEL207-106D1W3
1 7/16	UELUP207-107D1W3											UEL207-107D1W3
40	UELUP208D1W3	49.2	116	84	54	20	13	100	56.3	21.4	M14 × 2	UEL208D1W3
1 1/2	UELUP208-108D1W3	1 15/16	4 9/16	3 5/16	2 1/8	25/32	1/2	3 15/16	2.217	0.843	M14 × 2	UEL208-108D1W3
1 9/16	UELUP208-109D1W3											UEL208-109D1W3
45	UELUP209D1W3	54.2	120	90	54	25	13	108	56.3	21.4	M14 × 2	UEL209D1W3
1 5/8	UELUP209-110D1W3											UEL209-110D1W3
1 11/16	UELUP209-111D1W3	2 1/8	4 23/32	3 17/32	2 1/8	31/32	1/2	4 1/4	2.217	0.843	M14 × 2	UEL209-111D1W3
1 3/4	UELUP209-112D1W3											UEL209-112D1W3
50	UELUP210D1W3	57.2	130	94	60	25	14	116	62.7	24.6	M16 × 2	UEL210D1W3
1 13/16	UELUP210-113D1W3											UEL210-113D1W3
1 7/8	UELUP210-114D1W3	2 1/4	5 1/8	3 11/16	2 3/8	31/32	9/16	4 9/16	2.469	0.969	M16 × 2	UEL210-114D1W3
1 15/16	UELUP210-115D1W3											UEL210-115D1W3
2	UELUP210-200D1W3											UEL210-200D1W3

Remarks: 1) These numbers indicate relubricatable type. If maintenance free type is needed, please order without suffix "D1".
Note: Please refer to page 36 for size of grease fitting.

Housing [1)] number	Mass of unit kg	lb
UP204D1	0.6	
UP204D1	1.3	
UP205D1	0.8	
UP205D1		
UP205D1	1.8	
UP205D1		
UP205D1		
UP206D1	1.3	
UP206D1		
UP206D1	2.9	
UP206D1		
UP206D1		
UP207D1	1.7	
UP207D1		
UP207D1	3.8	
UP207D1		
UP207D1		
UP208D1	2.0	
UP208D1	4.4	
UP208D1		
UP209D1	2.3	
UP209D1		
UP209D1	5.1	
UP209D1		
UP210D1	2.8	
UP210D1		
UP210D1	6.2	
UP210D1		
UP210D1		

Pillow blocks cast housing low center height
Eccentric locking collar type

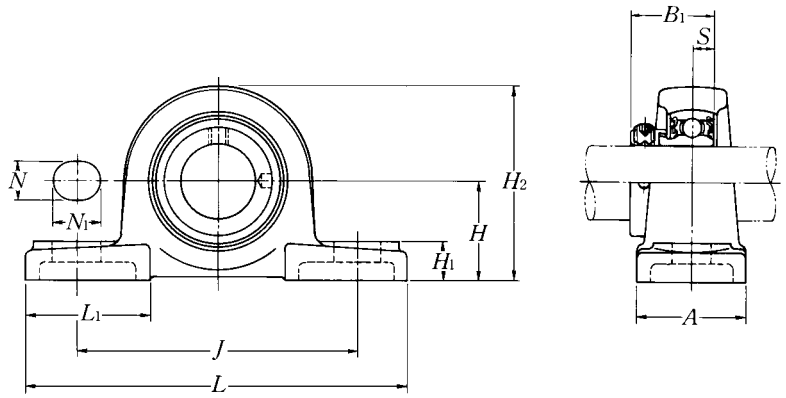

Shaft dia. mm / inch	Unit number 1) 2) 3)	Nominal dimensions (mm / inch) H	L	J	A	N	N1	H1	H2	L1	B1	S	Bolt size mm / inch
12	AELPL201W3	26.99	121	89	35	11	14	13	54	40	28.6	6.5	M10
1/2	AELPL201-008W3	1 1/16	4 3/4	3 1/2	1 3/8	7/16	9/16	1/2	2 1/8	1 9/16	1.126	0.256	3/8
15	AELPL202W3	26.99	121	89	35	11	14	13	54	40	28.6	6.5	M10
9/16	AELPL202-009W3	1 1/16	4 3/4	3 1/2	1 3/8	7/16	9/16	1/2	2 1/8	1 9/16	1.126	0.256	3/8
5/8	AELPL202-010W3												
17	AELPL203W3	26.99	121	89	35	11	14	13	54	40	28.6	6.5	M10
11/16	AELPL203-011W3	1 1/16	4 3/4	3 1/2	1 3/8	7/16	9/16	1/2	2 1/8	1 9/16	1.126	0.256	3/8
20	AELPL204W3	31.75	127	95	38	13	16	14	64	42	31	7.5	M10
3/4	AELPL204-012W3	1 1/4	5	3 3/4	1 1/2	1/2	5/8	9/16	2 17/32	1 21/32	1.220	0.295	3/8
25	AELPL205W3	33.34	140	105	38	13	16	15	68	42	31	7.5	M10
13/16	AELPL205-013W3												
7/8	AELPL205-014W3	1 5/16	5 1/2	4 1/8	1 1/2	1/2	5/8	19/32	2 11/16	1 21/32	1.220	0.295	3/8
15/16	AELPL205-015W3												
1	AELPL205-100W3												
30	AELPL206W3	39.69	165	121	48	17	20	17	80	54	35.7	9	M14
1 1/16	AELPL206-101W3												
1 1/8	AELPL206-102W3	1 9/16	6 1/2	4 3/4	1 7/8	21/32	25/32	21/32	3 5/32	2 1/8	1.406	0.354	1/2
1 3/16	AELPL206-103W3												
1 1/4	AELPL206-104W3												
35	AELPL207W3	46.04	167	127	48	17	20	18	91	54	38.9	9.5	M14
1 1/4	AELPL207-104W3												
1 5/16	AELPL207-105W3	1 13/16	6 9/16	5	1 7/8	21/32	25/32	23/32	3 19/32	2 1/8	1.531	0.374	1/2
1 3/8	AELPL207-106W3												
1 7/16	AELPL207-107W3												
40	AELP208W3	49.2	184	137	54	17	20	18	98	52	43.7	11	M14
1 1/2	AELP208-108W3	1 15/16	7 1/4	5 13/32	2 1/8	21/32	25/32	23/32	3 27/32	2 1/16	1.720	0.433	1/2
1 9/16	AELP208-109W3												

Remarks: 1) AELPL201 to AELPL205 has solid base.
2) If relubricatable type is neede, please order with suffix "D1".
3) AELPL208 has the same dimension as AELP208.

Bearing number [2]	Housing [2] number	Mass of unit kg lb
AEL201W3	PL201	0.5
AEL201-008W3	PL201	1.1
AEL202W3	PL201	0.5
AEL202-009W3	PL201	1.1
AEL202-010W3	PL201	
AEL203W3	PL201	0.5
AEL203-011W3	PL201	1.1
AEL204W3	PL204	0.7
AEL204-012W3	PL204	1.5
AEL205W3	PL205	0.8
AEL205-013W3	PL205	1.8
AEL205-014W3	PL205	
AEL205-015W3	PL205	
AEL205-100W3	PL205	
AEL206W3	PL206	1.3
AEL206-101W3	PL206	2.9
AEL206-102W3	PL206	
AEL206-103W3	PL206	
AEL206-104W3	PL206	
AEL207W3	PL207	1.6
AEL207-104W3	PL207	3.5
AEL207-105W3	PL207	
AEL207-106W3	PL207	
AEL207-107W3	PL207	
AEL208W3	P208	2.0
AEL208-108W3	P208	4.4
AEL208-109W3	P208	

Pillow blocks cast housing low center height
Eccentric locking collar type

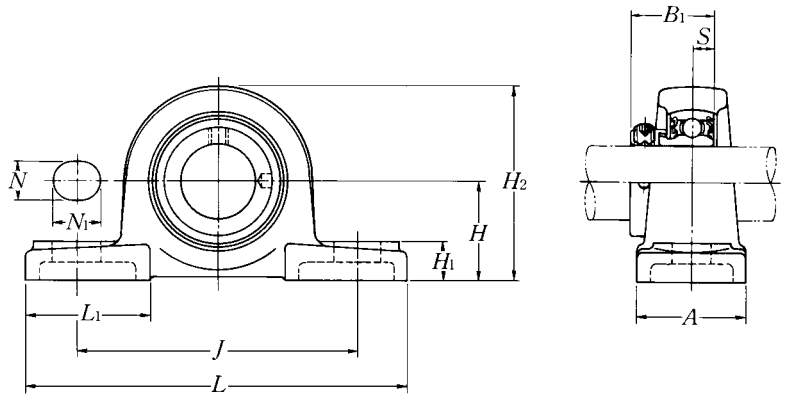

Shaft dia. mm / inch	Unit number 1) 2) 3)	Nominal dimensions (mm / inch) H	L	J	A	N	N1	H1	H2	L1	B1	S	Bolt size mm / inch
45	AELPL209W3	52.39	190	146	54	17	20	20	104	60	43.7	11	M14
1 5/8	AELPL209-110W3												
1 11/16	AELPL209-111W3	2 1/16	7 15/32	5 3/4	2 1/8	21/32	25/32	25/32	4 3/32	2 3/8	1.720	0.433	1/2
1 3/4	AELPL209-112W3												
50	AELPL210W3	55.56	206	159	60	20	23	21	112	65	43.7	11	M16
1 13/16	AELPL210-113W3												
1 7/8	AELPL210-114W3	2 3/16	8 1/8	6 1/4	2 3/8	25/32	29/32	13/16	4 13/32	2 9/16	1.720	0.433	5/8
1 15/16	AELPL210-115W3												
2	AELPL210-200W3												
55	AELPL211W3	61.91	219	171	60	20	23	23	124	65	48.4	12	M16
2	AELPL211-200W3												
2 1/16	AELPL211-201W3	2 7/16	8 5/8	6 23/32	2 3/8	25/32	29/32	29/32	4 7/8	2 9/16	1.906	0.472	5/8
2 1/8	AELPL211-202W3												
2 3/16	AELPL211-203W3												
60	AELPL212W3	68.26	241	184	70	20	23	25	136	70	53.1	13.5	M16
2 1/4	AELPL212-204W3												
2 5/16	AELPL212-205W3	2 11/16	9 1/2	7 1/4	2 3/4	25/32	29/32	31/32	5 11/32	2 3/4	2.091	0.531	5/8
2 3/8	AELPL212-206W3												
2 7/16	AELPL212-207W3												

Remarks: 1) AELPL201 to AELPL205 has solid base.
2) If relubricatable type is neede, please order with suffix "D1".
3) AELPL208 has the same dimension as AELP208

Bearing number [2]	Housing [2] number	Mass of unit kg lb
AEL209W3	PL209	2.2
AEL209-110W3	PL209	
AEL209-111W3	PL209	4.9
AEL209-112W3	PL209	
AEL210W3	PL210	2.7
AEL210-113W3	PL210	
AEL210-114W3	PL210	6.0
AEL210-115W3	PL210	
AEL210-200W3	PL210	
AEL211W3	PL211	3.3
AEL211-200W3	PL211	
AEL211-201W3	PL211	7.3
AEL211-202W3	PL211	
AEL211-203W3	PL211	
AEL212W3	PL212	4.5
AEL212-204W3	PL212	
AEL212-205W3	PL212	9.9
AEL212-206W3	PL212	
AEL212-207W3	PL212	

Pillow blocks cast housing low center height
Eccentric locking collar type

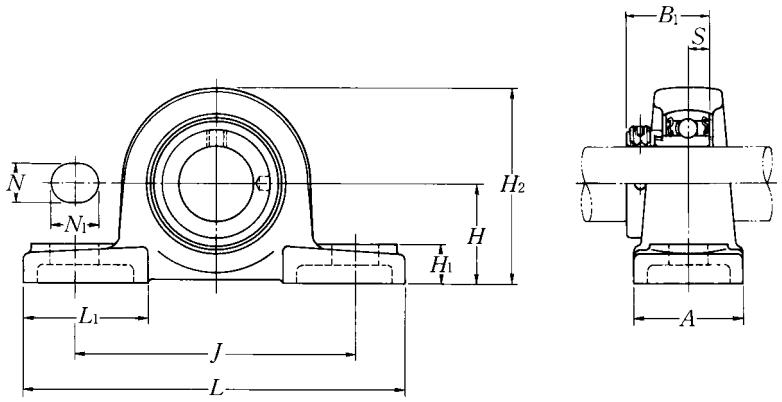

Shaft dia. mm / inch	Unit number 1) 2) 3)	Nominal dimensions (mm / inch) H	L	J	A	N	N1	H1	H2	L1	B1	S	Bolt size mm / inch
12	JELPL201W3	26.99	121	89	35	11	14	13	54	40	28.6	6.5	M10
1/2	JELPL201-008W3	1 1/16	4 3/4	3 1/2	1 3/8	7/16	9/16	1/2	2 1/8	1 9/16	1.126	0.256	3/8
15	JELPL202W3	26.99	121	89	35	11	14	13	54	40	28.6	6.5	M10
9/16	JELPL202-009W3	1 1/16	4 3/4	3 1/2	1 3/8	7/16	9/16	1/2	2 1/8	1 9/16	1.126	0.256	3/8
5/8	JELPL202-010W3												
17	JELPL203W3	26.99	121	89	35	11	14	13	54	40	28.6	6.5	M10
11/16	JELPL203-011W3	1 1/16	4 3/4	3 1/2	1 3/8	7/16	9/16	1/2	2 1/8	1 9/16	1.126	0.256	3/8
20	JELPL204W3	31.75	127	95	38	13	16	14	64	42	31	7.5	M10
3/4	JELPL204-012W3	1 1/4	5	3 3/4	1 1/2	1/2	5/8	9/16	2 17/32	1 21/32	1.220	0.295	3/8
25	JELPL205W3	33.34	140	105	38	13	16	15	68	42	31	7.5	M10
13/16	JELPL205-013W3												
7/8	JELPL205-014W3	1 5/16	5 1/2	4 1/8	1 1/2	1/2	5/8	19/32	2 11/16	1 21/32	1.220	0.295	3/8
15/16	JELPL205-015W3												
1	JELPL205-100W3												
30	JELPL206W3	39.69	165	121	48	17	20	17	80	54	35.7	9	M14
1 1/16	JELPL206-101W3												
1 1/8	JELPL206-102W3	1 9/16	6 1/2	4 3/4	1 7/8	21/32	25/32	21/32	3 5/32	2 1/8	1.406	0.354	1/2
1 3/16	JELPL206-103W3												
1 1/4	JELPL206-104W3												
35	JELPL207W3	46.04	167	127	48	17	20	18	91	54	38.9	9.5	M14
1 1/4	JELPL207-104W3												
1 5/16	JELPL207-105W3	1 13/16	6 9/16	5	1 7/8	21/32	25/32	23/32	3 19/32	2 1/8	1.531	0.374	1/2
1 3/8	JELPL207-106W3												
1 7/16	JELPL207-107W3												
40	JELP208W3	49.2	184	137	54	17	20	18	98	52	43.7	11	M14
1 1/2	JELP208-108W3	1 15/16	7 1/4	5 13/32	2 1/8	21/32	25/32	23/32	3 27/32	2 1/16	1.720	0.433	1/2
1 9/16	JELP208-109W3												

Remarks: 1) JELPL201 to JELPL205 has solid base.
2) If relubricatable type is neede, please order with suffix "D1".
3) JELPL208 has the same dimension as JELP208.

Bearing number [2]	Housing [2] number	Mass of unit kg lb
JEL201W3	PL201	0.5
JEL201-008W3	PL201	1.1
JEL202W3	PL201	0.5
JEL202-009W3	PL201	1.1
JEL202-010W3	PL201	
JEL203W3	PL201	0.5
JEL203-011W3	PL201	1.1
JEL204W3	PL204	0.7
JEL204-012W3	PL204	1.5
JEL205W3	PL205	0.8
JEL205-013W3	PL205	1.8
JEL205-014W3	PL205	
JEL205-015W3	PL205	
JEL205-100W3	PL205	
JEL206W3	PL206	1.3
JEL206-101W3	PL206	2.9
JEL206-102W3	PL206	
JEL206-103W3	PL206	
JEL206-104W3	PL206	
JEL207W3	PL207	1.6
JEL207-104W3	PL207	3.5
JEL207-105W3	PL207	
JEL207-106W3	PL207	
JEL207-107W3	PL207	
JEL208W3	P208	2.0
JEL208-108W3	P208	4.4
JEL208-109W3	P208	

Pillow blocks cast housing low center height
Eccentric locking collar type

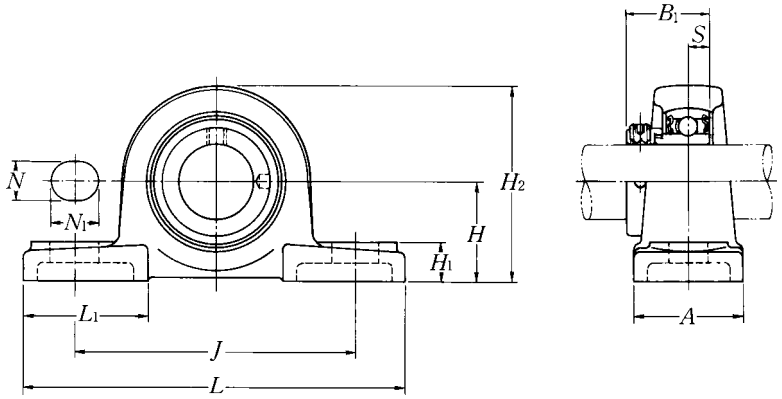

Shaft dia. mm / inch	Unit number 1) 2) 3)	Nominal dimensions mm / inch H	L	J	A	N	N1	H1	H2	L1	B1	S	Bolt size mm / inch
45	JELPL209W3	52.39	190	146	54	17	20	20	104	60	43.7	11	M14
1 5/8	JELPL209-110W3												
1 11/16	JELPL209-111W3	2 1/16	7 15/32	5 3/4	2 1/8	21/32	25/32	25/32	4 3/32	2 3/8	1.720	0.433	1/2
1 3/4	JELPL209-112W3												
50	JELPL210W3	55.56	206	159	60	20	23	21	112	65	43.7	11	M16
1 13/16	JELPL210-113W3												
1 7/8	JELPL210-114W3	2 3/16	8 1/8	6 1/4	2 3/8	25/32	29/32	13/16	4 13/32	2 9/16	1.720	0.433	5/8
1 15/16	JELPL210-115W3												
2	JELPL210-200W3												
55	JELPL211W3	61.91	219	171	60	20	23	23	124	65	48.4	12	M16
2	JELPL211-200W3												
2 1/16	JELPL211-201W3	2 7/16	8 5/8	6 23/32	2 3/8	25/32	29/32	29/32	4 7/8	2 9/16	1.906	0.472	5/8
2 1/8	JELPL211-202W3												
2 3/16	JELPL211-203W3												
60	JELPL212W3	68.26	241	184	70	20	23	25	136	70	53.1	13.5	M16
2 1/4	JELPL212-204W3												
2 5/16	JELPL212-205W3	2 11/16	9 1/2	7 1/4	2 3/4	25/32	29/32	31/32	5 11/32	2 3/4	2.091	0.531	5/8
2 3/8	JELPL212-206W3												
2 7/16	JELPL212-207W3												

Remarks: 1) JELPL201 to JELPL205 has solid base.
2) If relubricatable type is neede, please order with suffix "D1".
3) JELPL208 has the same dimension as JELP208.

Bearing number [2]	Housing [2] number	Mass of unit kg lb
JEL209W3	PL209	2.2
JEL209-110W3	PL209	
JEL209-111W3	PL209	4.9
JEL209-112W3	PL209	
JEL210W3	PL210	2.8
JEL210-113W3	PL210	
JEL210-114W3	PL210	6.2
JEL210-115W3	PL210	
JEL210-200W3	PL210	
JEL211W3	PL211	3.5
JEL211-200W3	PL211	
JEL211-201W3	PL211	7.7
JEL211-202W3	PL211	
JEL211-203W3	PL211	
JEL212W3	PL212	4.7
JEL212-204W3	PL212	
JEL212-205W3	PL212	10
JEL212-206W3	PL212	
JEL212-207W3	PL212	

Light pillow blocks cast housing
Eccentric locking collar type

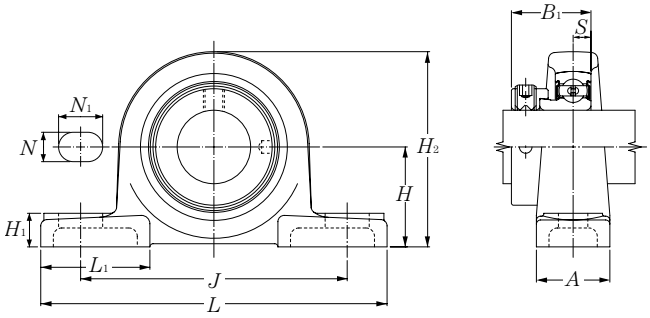

Shaft dia. mm / inch	Unit number [1]	Nominal dimensions (mm / inch) H	L	J	A	N	N_1	H_1	H_2	L_1	B_1	S	Bolt size mm / inch
12	AELPB201W3	30.2	114	87	25	11	16	12	57	38	28.6	6.5	M8
1/2	AELPB201-008W3	1 3/16	4 1/2	3 7/16	31/32	7/16	5/8	15/32	2 1/4	1 1/2	1.126	0.256	5/16
15	AELPB202W3	30.2	114	87	25	11	16	12	57	38	28.6	6.5	M8
9/16	AELPB202-009W3	1 3/16	4 1/2	3 7/16	31/32	7/16	5/8	15/32	2 1/4	1 1/2	1.126	0.256	5/16
5/8	AELPB202-010W3												
17	AELPB203W3	30.2	114	87	25	11	16	12	57	38	28.6	6.5	M8
11/16	AELPB203-011W3	1 3/16	4 1/2	3 7/16	31/32	7/16	5/8	15/32	2 1/4	1 1/2	1.126	0.256	5/16
20	AELPB204W3	33.3	125	97	27	11	16	13	65	40	31	7.5	M8
3/4	AELPB204-012W3	1 5/16	4 29/32	3 13/16	1 1/16	7/16	5/8	1/2	2 9/16	1 9/16	1.220	0.295	5/16
25	AELPB205W3	36.5	130	100	29	11	16	13	71	42	31	7.5	M8
13/16	AELPB205-013W3												
7/8	AELPB205-014W3	1 7/16	5 1/8	3 15/16	1 5/32	7/16	5/8	1/2	2 25/32	1 21/32	1.220	0.295	5/16
15/16	AELPB205-015W3												
1	AELPB205-100W3												
30	AELPB206W3	42.9	156	120	33	14	21	14	83	52	35.7	9	M12
1 1/16	AELPB206-101W3												
1 1/8	AELPB206-102W3	1 11/16	6 5/32	4 23/32	1 5/16	9/16	13/16	9/16	3 9/32	2 1/16	1.406	0.354	1/2
1 3/16	AELPB206-103W3												
1 1/4	AELPB206-104W3												
35	AELPB207W3	47.6	165	127	35	14	21	16	93	52	38.9	9.5	M12
1 1/4	AELPB207-104W3												
1 5/16	AELPB207-105W3	1 7/8	6 1/2	5	1 3/8	9/16	13/16	5/8	3 21/32	2 1/16	1.531	0.374	1/2
1 3/8	AELPB207-106W3												
1 7/16	AELPB207-107W3												
40	AELPB208W3	50.8	184	140	37	14	22	18	102	52	43.7	11	M12
1 1/2	AELPB208-108W3	2	7 1/4	5 1/2	1 15/32	9/16	7/8	23/32	4 1/32	2 1/16	1.720	0.433	1/2
1 9/16	AELPB208-109W3												

Remarks: 1) If relubricatable type is neede, please order with suffix "D1".

Bearing number [1]	Housing [1] number	Mass of unit kg	lb
AEL201W3	PB201	0.4	
AEL201-008W3	PB201	0.9	
AEL202W3	PB201	0.4	
AEL202-009W3 AEL202-010W3	PB201	0.9	
AEL203W3	PB201	0.4	
AEL203-011W3	PB201	0.9	
AEL204W3	PB204	0.6	
AEL204-012W3	PB204	1.3	
AEL205W3	PB205	0.7	
AEL205-013W3 AEL205-014W3 AEL205-015W3 AEL205-100W3	PB205	1.5	
AEL206W3	PB206	1.1	
AEL206-101W3 AEL206-102W3 AEL206-103W3 AEL206-104W3	PB206	2.4	
AEL207W3	PB207	1.4	
AEL207-104W3 AEL207-105W3 AEL207-106W3 AEL207-107W3	PB207	3.1	
AEL208W3	PB208	2.0	
AEL208-108W3 AEL208-109W3	PB208	4.4	

Pillow blocks pressed steel housing
Eccentric locking collar type

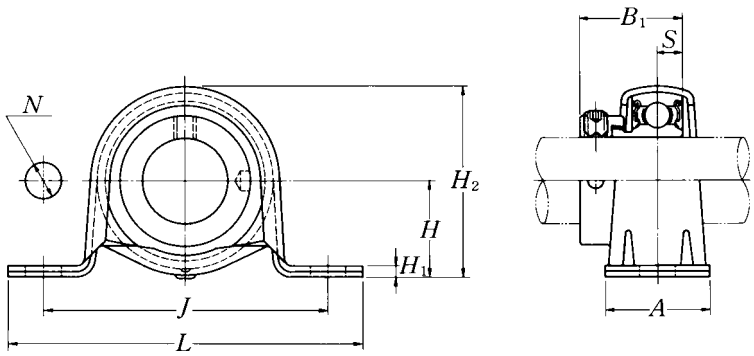

Shaft dia. mm / inch	Unit number	Nominal dimensions H	L	J	A	N (mm)	H1 (inch)	H2	B1	S	Bolt size mm / inch	Bearing number
12	AELPP201W3	22.2	86	68	25	9.5	3.2	43.8	28.6	6.5	M 8	AEL201W3
1/2	AELPP201-008W3	7/8	3 3/8	2 11/16	31/32	3/8	0.126	1 23/32	1.126	0.256	5/16	AEL201-008W3
15	AELPP202W3	22.2	86	68	25	9.5	3.2	43.8	28.6	6.5	M 8	AEL202W3
9/16	AELPP202-009W3	7/8	3 3/8	2 11/16	31/32	3/8	0.126	1 23/32	1.126	0.256	5/16	AEL202-009W3
5/8	AELPP202-010W3											AEL202-010W3
17	AELPP203W3	22.2	86	68	25	9.5	3.2	43.8	28.6	6.5	M 8	AEL203W3
11/16	AELPP203-011W3	7/8	3 3/8	2 11/16	31/32	3/8	0.126	1 23/32	1.126	0.256	5/16	AEL203-011W3
20	AELPP204W3	25.4	98	76	32	9.5	3.2	50.5	31	7.5	M 8	AEL204W3
3/4	AELPP204-012W3	1	3 27/32	3	1 1/4	3/8	0.126	2	1.220	0.295	5/16	AEL204-012W3
25	AELPP205W3	28.6	108	86	32	11.5	4	56.6	31	7.5	M10	AEL205W3
13/16	AELPP205-013W3											AEL205-013W3
7/8	AELPP205-014W3	1 1/8	4 1/4	3 3/8	1 1/4	29/64	0.157	2 7/32	1.220	0.295	3/8	AEL205-014W3
15/16	AELPP205-015W3											AEL205-015W3
1	AELPP205-100W3											AEL205-100W3
30	AELPP206W3	33.3	117	95	38	11.5	4	66.3	35.7	9	M10	AEL206W3
1 1/16	AELPP206-101W3											AEL206-101W3
1 1/8	AELPP206-102W3	1 5/16	4 19/32	3 3/4	1 1/2	29/64	0.157	2 5/8	1.406	0.354	3/8	AEL206-102W3
1 3/16	AELPP206-103W3											AEL206-103W3
1 1/4	AELPP206-104W3											AEL206-104W3
35	AELPP207W3	39.7	129	106	42	11.5	4.6	78	38.9	9.5	M10	AEL207W3
1 1/4	AELPP207-104W3											AEL207-104W3
1 5/16	AELPP207-105W3	1 9/16	5 3/32	4 3/16	1 21/32	29/64	0.181	3 1/16	1.531	0.374	3/8	AEL207-105W3
1 3/8	AELPP207-106W3											AEL207-106W3
1 7/16	AELPP207-107W3											AEL207-107W3

Remarks: 1) The permissible load only applies in applications where the load is stable and the speed is 2400 min^{-1} or less.
The mounting surface should be flat.

Housing number	Mass of unit kg lb	Max. load [1] recommended N lbf radial	axial
PP203 PP203	0.2 0.4	2 000 440	800 160
PP203 PP203 PP203	0.2 0.4	2 000 440	800 160
PP203 PP203	0.2 0.4	2 000 440	800 160
PP204 PP204	0.3 0.7	2 500 550	1 000 200
PP205 PP205 PP205 PP205 PP205	0.3 0.7	3 500 770	1 400 280
PP206 PP206 PP206 PP206 PP206	0.5 1.1	4 000 880	1 600 320
PP207 PP207 PP207 PP207 PP207	0.8 1.8	4 500 990	1 800 360

Pillow blocks pressed steel housing with rubber ring
Eccentric locking collar type

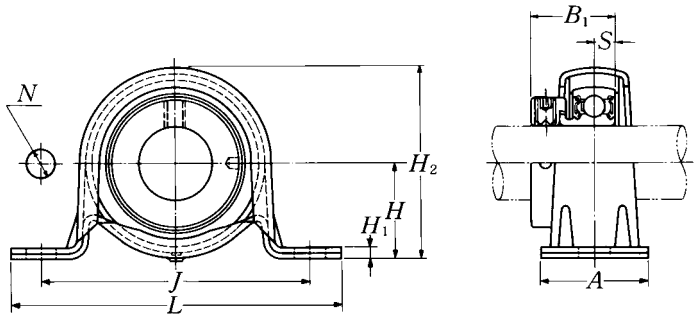

Shaft dia. mm / inch	Unit number	Nominal dimensions H	L	J	A	N (mm / inch)	H1	H2	B1	S	Bolt size mm / inch	Bearing number
12	AELRPP201W3	25.4	98	76	32	9.5	3.2	50.5	28.6	6.5	M 8	AEL201W3
1/2	AELRPP201-008W3	1	3 27/32	3	1 1/4	3/8	0.126	2	1.126	0.256	5/16	AEL201-008W3
15	AELRPP202W3	25.4	98	76	32	9.5	3.2	50.5	28.6	6.5	M 8	AEL202W3
9/16	AELRPP202-009W3	1	3 27/32	3	1 1/4	3/8	0.126	2	1.126	0.256	5/16	AEL202-009W3
5/8	AELRPP202-010W3											AEL202-010W3
17	AELRPP203W3	25.4	98	76	32	9.5	3.2	50.5	28.6	6.5	M 8	AEL203W3
11/16	AELRPP203-011W3	1	3 27/32	3	1 1/4	3/8	0.126	2	1.126	0.256	5/16	AEL203-011W3
20	AELRPP204W3	28.6	108	86	32	11.5	4	56.6	31	7.5	M10	AEL204W3
3/4	AELRPP204-012W3	1 1/8	4 1/4	3 3/8	1 1/4	29/64	0.157	2 7/32	1.220	0.295	3/8	AEL204-012W3
25	AELRPP205W3	33.3	117	95	38	11.5	4	66.3	31	7.5	M10	AEL205W3
13/16	AELRPP205-013W3											AEL205-013W3
7/8	AELRPP205-014W3	1 5/16	4 19/32	3 3/4	1 1/2	29/64	0.157	2 5/8	1.220	0.295	3/8	AEL205-014W3
15/16	AELRPP205-015W3											AEL205-015W3
1	AELRPP205-100W3											AEL205-100W3
30	AELRPP206W3	39.7	129	106	42	11.5	4.6	78	35.7	9	M10	AEL206W3
1 1/16	AELRPP206-101W3											AEL206-101W3
1 1/8	AELRPP206-102W3	1 9/16	5 3/32	4 3/16	1 21/32	29/64	0.181	3 1/16	1.406	0.354	3/8	AEL206-102W3
1 3/16	AELRPP206-103W3											AEL206-103W3
1 1/4	AELRPP206-104W3											AEL206-104W3

Remarks: 1) The permissible load only applies in applications where the load is stable and the speed is 2400 min^{-1} or less.
The mounting surface should be flat.
2) When an anti-vibration rubber ring is used, the self alignment capability will be reduce.

Housing number		Mass of unit	Max. load [1] recommended	
		kg lb	N lbf	
rubber ring	steel		radial	axial
R201	PP204	0.2	1 000	200
R201	PP204	0.4	220	40
R201	PP204	0.2	1 000	200
R201	PP204	0.4	220	40
R201	PP204			
R201	PP204	0.2	1 000	200
R201	PP204	0.4	220	40
R204	PP205	0.3	1 150	200
R204	PP205	0.7	250	40
R205	PP206	0.4	1 300	200
R205	PP206			
R205	PP206	0.9	280	40
R205	PP206			
R205	PP206			
R206	PP207	0.6	1 500	200
R206	PP207			
R206	PP207	1.3	330	40
R206	PP207			
R206	PP207			

Square flanged units cast housing
Eccentric locking collar type

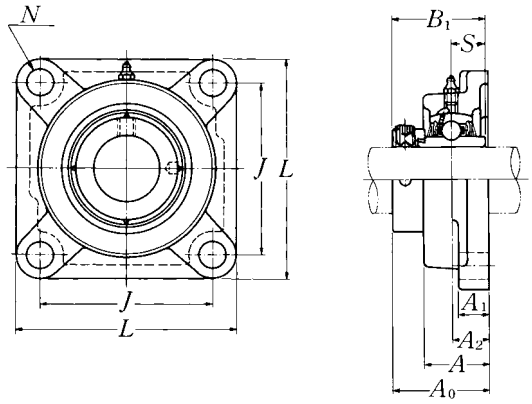

Shaft dia. mm / inch	Unit number [1]	Nominal dimensions mm / inch L	J	A2	A1	A	N	A0	B1	S	Bolt size mm / inch	Bearing number
20	UELFU204D1W3	86	63.5	19	15	29.5	11.5	45.6	43.7	17.1	M10	UEL204D1W3
3/4	UELFU204-012D1W3	3 3/8	2 1/2	3/4	19/32	1 5/32	29/64	1 51/64	1.720	0.673	3/8	UEL204-012D1W3
25	UELFU205D1W3	96	70	19	15	30	11.5	45.9	44.4	17.45	M10	UEL205D1W3
13/16	UELFU205-013D1W3											UEL205-013D1W3
7/8	UELFU205-014D1W3	3 25/32	2 3/4	3/4	19/32	1 3/16	29/64	1 13/16	1.748	0.687	3/8	UEL205-014D1W3
15/16	UELFU205-015D1W3											UEL205-015D1W3
1	UELFU205-100D1W3											UEL205-100D1W3
30	UELFU206D1W3	109	82.5	20	16	33	11.5	50.1	48.4	18.25	M10	UEL206D1W3
1 1/16	UELFU206-101D1W3											UEL206-101D1W3
1 1/8	UELFU206-102D1W3	4 9/32	3 1/4	25/32	5/8	1 5/16	29/64	1 31/32	1.906	0.719	3/8	UEL206-102D1W3
1 3/16	UELFU206-103D1W3											UEL206-103D1W3
1 1/4	UELFU206-104D1W3											UEL206-104D1W3
35	UELFU207D1W3	118	92	21	17	36	14	53.3	51.1	18.8	M12	UEL207D1W3
1 1/4	UELFU207-104D1W3											UEL207-104D1W3
1 5/16	UELFU207-105D1W3	4 21/32	3 5/8	53/64	21/32	1 13/32	35/64	2 3/32	2.012	0.740	1/2	UEL207-105D1W3
1 3/8	UELFU207-106D1W3											UEL207-106D1W3
1 7/16	UELFU207-107D1W3											UEL207-107D1W3
40	UELFU208D1W3	131	101.5	24	17	39	14	58.9	56.3	21.4	M12	UEL208D1W3
1 1/2	UELFU208-108D1W3	5 5/32	4	15/16	21/32	1 17/32	35/64	2 5/16	2.217	0.843	1/2	UEL208-108D1W3
1 9/16	UELFU208-109D1W3											UEL208-109D1W3
45	UELFU209D1W3	137	105	24	18	40	16	58.9	56.3	21.4	M14	UEL209D1W3
1 5/8	UELFU209-110D1W3											UEL209-110D1W3
1 11/16	UELFU209-111D1W3	5 13/32	4 9/64	15/16	23/32	1 9/16	5/8	2 5/16	2.217	0.843	1/2	UEL209-111D1W3
1 3/4	UELFU209-112D1W3											UEL209-112D1W3
50	UELFU210D1W3	144	111	28	20	46	18	66.1	62.7	24.6	M16	UEL210D1W3
1 13/16	UELFU210-113D1W3											UEL210-113D1W3
1 7/8	UELFU210-114D1W3	5 21/32	4 3/8	1 7/64	25/32	1 13/16	45/64	2 39/64	2.469	0.969	5/8	UEL210-114D1W3
1 15/16	UELFU210-115D1W3											UEL210-115D1W3
2	UELFU210-200D1W3											UEL210-200D1W3

Remarks: 1) These numbers indicate relubricatable type. If maintenance free type is needed, please order without suffix "D1".
Note: Please refer to page 36 for size of grease fitting.

Housing [1)] number	Mass of unit kg	lb
FU204D1	0.8	
FU204D1	1.8	
FU205D1	1.0	
FU205D1		
FU205D1	2.2	
FU205D1		
FU205D1		
FU206D1	1.4	
FU206D1		
FU206D1	3.1	
FU206D1		
FU206D1		
FU207D1	1.7	
FU207D1		
FU207D1	3.8	
FU207D1		
FU207D1		
FU208D1	2.2	
FU208D1	4.9	
FU208D1		
FU209D1	2.4	
FU209D1		
FU209D1	5.3	
FU209D1		
FU210D1	2.9	
FU210D1		
FU210D1	6.4	
FU210D1		
FU210D1		

Square flanged units cast housing
Eccentric locking collar type

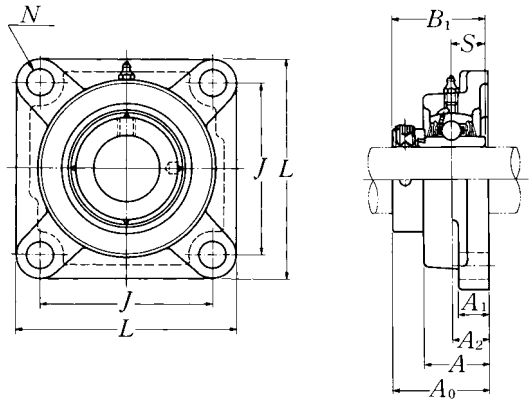

Shaft dia. mm / inch	Unit number [1]	Nominal dimensions mm / inch L	J	A2	A1	A	N	A0	B1	S	Bolt size mm / inch	Bearing number
55	UELFU211D1W3	163	130	31	21	49	18	74.6	71.4	27.75	M16	UEL211D1W3
2	UELFU211-200D1W3											UEL211-200D1W3
2 1/16	UELFU211-201D1W3	6 13/32	5 1/8	1 7/32	13/16	1 15/16	45/64	2 15/16	2.811	1.093	5/8	UEL211-201D1W3
2 1/8	UELFU211-202D1W3											UEL211-202D1W3
2 3/16	UELFU211-203D1W3											UEL211-203D1W3
60	UELFU212D1W3	175	143	34	21	53	18	80.8	77.8	30.95	M16	UEL212D1W3
2 1/4	UELFU212-204D1W3											UEL212-204D1W3
2 5/16	UELFU212-205D1W3	6 7/8	5 5/8	1 11/32	13/16	2 3/32	45/64	3 3/16	3.063	1.219	5/8	UEL212-205D1W3
2 3/8	UELFU212-206D1W3											UEL212-206D1W3
2 7/16	UELFU212-207D1W3											UEL212-207D1W3
65	UELFU213D1W3	187	149	38	22	59	20.5	89.55	85.7	34.15	M18	UEL213D1W3
2 1/2	UELFU213-208D1W3	7 3/8	5 55/64	1 1/2	7/8	2 5/16	13/16	3 17/32	3.374	1.344	5/8	UEL213-208D1W3
2 9/16	UELFU213-209D1W3											UEL213-209D1W3
70	UELFU214D1W3	193	152	38	22	62	20.5	89.55	85.7	34.15	M18	UEL214D1W3
2 5/8	UELFU214-210D1W3											UEL214-210D1W3
2 11/16	UELFU214-211D1W3	7 19/32	5 63/64	1 1/2	7/8	2 7/16	13/16	3 17/32	3.374	1.344	5/8	UEL214-211D1W3
2 3/4	UELFU214-212D1W3											UEL214-212D1W3
75	UELFU215D1W3	200	159	41	22	64	20.5	95.7	92	37.3	M18	UEL215D1W3
2 13/16	UELFU215-213D1W3											UEL215-213D1W3
2 7/8	UELFU215-214D1W3	7 7/8	6 17/64	1 39/64	7/8	2 33/64	13/16	3 49/64	3.622	1.469	5/8	UEL215-214D1W3
2 15/16	UELFU215-215D1W3											UEL215-215D1W3
3	UELFU215-300D1W3											UEL215-300D1W3

Remarks: 1) These numbers indicate relubricatable type. If maintenance free type is needed, please order without suffix "D1".
Note: Please refer to page 36 for size of grease fitting.

Housing [1)] number	Mass of unit kg	lb
FU211D1	3.9	
FU211D1		
FU211D1	8.6	
FU211D1		
FU211D1		
FU212D1	4.7	
FU212D1		
FU212D1	10	
FU212D1		
FU212D1		
FU213D1	6.3	
FU213D1	14	
FU213D1		
FU214D1	6.7	
FU214D1		
FU214D1	15	
FU214D1		
FU215D1	7.0	
FU215D1		
FU215D1	15	
FU215D1		
FU215D1		

Square flanged units cast housing
Eccentric locking collar type

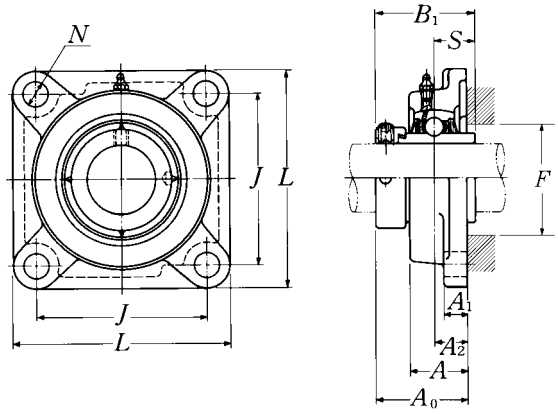

Shaft dia. mm / inch	Unit number [1]	Nominal dimensions mm / inch L	J	A2	A1	A	N	A0	B1	S	F min.	Bolt size mm / inch
20	UELF204D1W3	86	64	15	11	25.5	12	41.6	43.7	17.1	34	M10
3/4	UELF204-012D1W3	3 3/8	2 33/64	19/32	7/16	1	15/32	1 41/64	1.720	0.673	1 11/32	3/8
25	UELF205D1W3	95	70	16	13	27	12	42.9	44.4	17.45	38	M10
13/16	UELF205-013D1W3											
7/8	UELF205-014D1W3	3 3/4	2 3/4	5/8	1/2	1 1/16	15/32	1 11/16	1.748	0.687	1 1/2	3/8
15/16	UELF205-015D1W3											
1	UELF205-100D1W3											
30	UELF206D1W3	108	83	18	13	31	12	48.1	48.4	18.25	45	M10
1 1/16	UELF206-101D1W3											
1 1/8	UELF206-102D1W3	4 1/4	3 17/64	45/64	1/2	1 7/32	15/32	1 57/64	1.906	0.719	1 25/32	3/8
1 3/16	UELF206-103D1W3											
1 1/4	UELF206-104D1W3											
35	UELF207D1W3	117	92	19	15	34	14	51.3	51.1	18.8	51	M12
1 1/4	UELF207-104D1W3											
1 5/16	UELF207-105D1W3	4 19/32	3 5/8	3/4	19/32	1 11/32	35/64	2 1/64	2.012	0.740	2	7/16
1 3/8	UELF207-106D1W3											
1 7/16	UELF207-107D1W3											
40	UELF208D1W3	130	102	21	15	36	16	55.9	56.3	21.4	57	M14
1 1/2	UELF208-108D1W3	5 1/8	4 1/64	53/64	19/32	1 13/32	5/8	2 13/64	2.217	0.843	2 1/4	1/2
1 9/16	UELF208-109D1W3											
45	UELF209D1W3	137	105	22	16	38	16	56.9	56.3	21.4	62	M14
1 5/8	UELF209-110D1W3											
1 11/16	UELF209-111D1W3	5 13/32	4 9/64	55/64	5/8	1 1/2	5/8	2 15/64	2.217	0.843	2 7/16	1/2
1 3/4	UELF209-112D1W3											
50	UELF210D1W3	143	111	22	16	40	16	60.1	62.7	24.6	67	M14
1 13/16	UELF210-113D1W3											
1 7/8	UELF210-114D1W3	5 5/8	4 3/8	55/64	5/8	1 9/16	5/8	2 23/64	2.469	0.969	2 41/64	1/2
1 15/16	UELF210-115D1W3											
2	UELF210-200D1W3											

Remarks: 1) These numbers indicate relubricatable type. If maintenance free type is needed, please order without suffix "D1".
Note: Please refer to page 36 for size of grease fitting.

Bearing number	Housing [1)] number	Mass of unit kg lb
UEL204D1W3	F204D1	0.6
UEL204-012D1W3	F204D1	1.3
UEL205D1W3	F205D1	0.9
UEL205-013D1W3	F205D1	2.0
UEL205-014D1W3	F205D1	
UEL205-015D1W3	F205D1	
UEL205-100D1W3	F205D1	
UEL206D1W3	F206D1	1.2
UEL206-101D1W3	F206D1	2.6
UEL206-102D1W3	F206D1	
UEL206-103D1W3	F206D1	
UEL206-104D1W3	F206D1	
UEL207D1W3	F207D1	1.6
UEL207-104D1W3	F207D1	3.5
UEL207-105D1W3	F207D1	
UEL207-106D1W3	F207D1	
UEL207-107D1W3	F207D1	
UEL208D1W3	F208D1	1.9
UEL208-108D1W3	F208D1	4.2
UEL208-109D1W3	F208D1	
UEL209D1W3	F209D1	2.3
UEL209-110D1W3	F209D1	5.1
UEL209-111	F209D1	
UEL209-112	F209D1	
UEL210D1W3	F210D1	2.7
UEL210-113D1W3	F210D1	6.0
UEL210-114D1W3	F210D1	
UEL210-115D1W3	F210D1	
UEL210-200D1W3	F210D1	

Square flanged units cast housing
Eccentric locking collar type

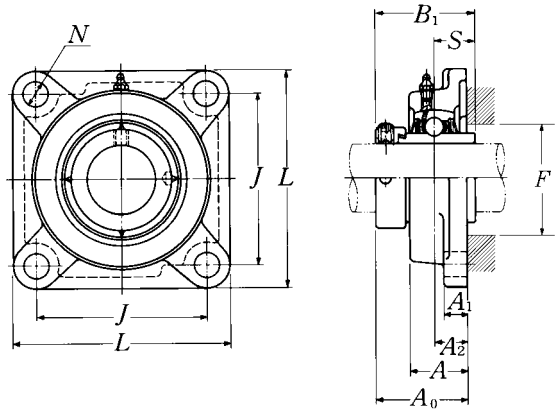

Shaft dia. mm / inch	Unit number [1]	Nominal dimensions mm / inch: L	J	A2	A1	A	N	A0	B1	S	F min.	Bolt size mm / inch
55	UELF211D1W3	162	130	25	18	43	19	68.6	71.4	27.75	73	M16
2	UELF211-200D1W3											
2 1/16	UELF211-201D1W3	6 3/8	5 1/8	63/64	23/32	1 11/16	3/4	2 45/64	2.811	1.093	2 7/8	5/8
2 1/8	UELF211-202D1W3											
2 3/16	UELF211-203D1W3											
60	UELF212D1W3	175	143	29	18	48	19	75.8	77.8	30.95	81	M16
2 1/4	UELF212-204D1W3											
2 5/16	UELF212-205D1W3	6 7/8	5 5/8	1 9/64	23/32	1 7/8	3/4	2 63/64	3.063	1.219	3 3/16	5/8
2 3/8	UELF212-206D1W3											
2 7/16	UELF212-207D1W3											
65	UELF213D1W3	187	149	30	22	50	19	81.55	85.7	34.15	87	M16
2 1/2	UELF213-208D1W3	7 3/8	5 55/64	1 3/16	7/8	1 31/32	3/4	3 13/16	3.374	1.344	3 7/16	5/8
2 9/16	UELF213-209D1W3											
70	UELF214D1W3	193	152	31	22	54	19	82.55	85.7	34.15	91	M16
2 5/8	UELF214-210D1W3											
2 11/16	UELF214-211D1W3	7 19/32	5 63/64	1 7/32	7/8	2 1/8	3/4	3 1/4	3.374	1.344	3 37/64	5/8
2 3/4	UELF214-212D1W3											
75	UELF215D1W3	200	159	34	22	56	19	88.7	92	37.3	97	M16
2 13/16	UELF215-213D1W3											
2 7/8	UELF215-214D1W3	7 7/8	6 17/64	1 11/32	7/8	2 7/32	3/4	3 31/64	3.622	1.469	3 13/16	5/8
2 15/16	UELF215-215D1W3											
3	UELF215-300D1W3											

Remarks: 1) These numbers indicate relubricatable type. If maintenance free type is needed, please order without suffix "D1".
Note: Please refer to page 36 for size of grease fitting.

Bearing number	Housing [1)] number	Mass of unit kg lb
UEL211D1W3	F211D1	3.6
UEL211-200D1W3	F211D1	7.9
UEL211-201D1W3	F211D1	
UEL211-202D1W3	F211D1	
UEL211-203D1W3	F211D1	
UEL212D1W3	F212D1	4.2
UEL212-204D1W3	F212D1	9.3
UEL212-205D1W3	F212D1	
UEL212-206D1W3	F212D1	
UEL212-207D1W3	F212D1	
UEL213D1W3	F213D1	6.1
UEL213-208D1W3	F213D1	13
UEL213-209D1W3	F213D1	
UEL214D1W3	F214D1	6.6
UEL214-210D1W3	F214D1	15
UEL214-211D1W3	F214D1	
UEL214-212D1W3	F214D1	
UEL215D1W3	F215D1	6.9
UEL215-213D1W3	F215D1	15
UEL215-214D1W3	F215D1	
UEL215-215D1W3	F215D1	
UEL215-300D1W3	F215D1	

Square flanged units cast housing
Eccentric locking collar type

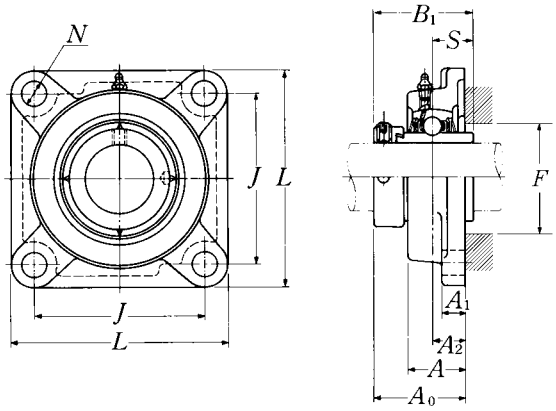

Shaft dia. mm / inch	Unit number [1]	Nominal dimensions mm / inch L	J	A2	A1	A	N	A0	B1	S	F min.	Bolt size mm / inch
25 13/16 7/8 15/16 1	UELF305D1W3 UELF305-013D1W3 UELF305-014D1W3 UELF305-015D1W3 UELF305-100D1W3	110 4 11/32	80 3 5/32	16 5/8	13 1/2	29 1 5/32	16 5/8	46.1 1 13/16	46.8 1.843	16.7 0.657	41 1 39/64	M14 1/2
30 1 1/16 1 1/8 1 3/16	UELF306D1W3 UELF306-101D1W3 UELF306-102D1W3 UELF306-103D1W3	125 4 29/32	95 3 47/64	18 45/64	15 19/32	32 1 1/4	16 5/8	50.5 1 63/64	50 1.969	17.5 0.689	49 1 15/16	M14 1/2
35 1 1/4 1 5/16 1 3/8 1 7/16	UELF307D1W3 UELF307-104D1W3 UELF307-105D1W3 UELF307-106D1W3 UELF307-107D1W3	135 5 5/16	100 3 15/16	20 25/32	16 5/8	36 1 13/32	19 3/4	53.3 2 3/32	51.6 2.031	18.3 0.720	— —	M16 5/8
40 1 1/2 1 9/16	UELF308D1W3 UELF308-108D1W3 UELF308-109D1W3	150 5 29/32	112 4 13/32	23 29/32	17 21/32	40 1 9/16	19 3/4	60.3 2 3/8	57.1 2.248	19.8 0.780	— —	M16 5/8
45 1 5/8 1 11/16 1 3/4	UELF309D1W3 UELF309-110D1W3 UELF309-111D1W3 UELF309-112D1W3	160 6 5/16	125 4 59/64	25 63/64	18 23/32	44 1 23/32	19 3/4	63.9 2 33/64	58.7 2.311	19.8 0.780	— —	M16 5/8
50 1 13/16 1 7/8 1 15/16	UELF310D1W3 UELF310-113D1W3 UELF310-114D1W3 UELF310-115D1W3	175 6 7/8	132 5 13/64	28 1 7/64	19 3/4	48 1 7/8	23 29/32	70 2 3/4	66.6 2.622	24.6 0.969	— —	M20 3/4
55 2 2 1/16 2 1/8 2 3/16	UELF311D1W3 UELF311-200D1W3 UELF311-201D1W3 UELF311-202D1W3 UELF311-203D1W3	185 7 9/32	140 5 33/64	30 1 3/16	20 25/32	52 2 1/16	23 29/32	75.2 2 61/64	73 2.874	27.8 1.094	— —	M20 3/4

Remarks: 1) These numbers indicate relubricatable type. If maintenance free type is needed, please order without suffix "D1"
2) Inner race face does not protrude from the housing face except UELF305 and UELF316.
Note: Please refer to page 36 for size of grease fitting.

Bearing number	Housing [1)] number	Mass of unit kg lb
UEL305D1W3	F305D1	1.2
UEL305-013D1W3	F305D1	2.6
UEL305-014D1W3	F305D1	
UEL305-015D1W3	F305D1	
UEL305-100D1W3	F305D1	
UEL306D1W3	F306D1	1.8
UEL306-101D1W3	F306D1	4.0
UEL306-102D1W3	F306D1	
UEL306-103D1W3	F306D1	
UEL307D1W3	F307D1	2.2
UEL307-104D1W3	F307D1	4.9
UEL307-105D1W3	F307D1	
UEL307-106D1W3	F307D1	
UEL307-107D1W3	F307D1	
UEL308D1W3	F308D1	2.9
UEL308-108D1W3	F308D1	6.4
UEL308-109D1W3	F308D1	
UEL309D1W3	F309D1	3.6
UEL309-110D1W3	F309D1	7.9
UEL309-111D1W3	F309D1	
UEL309-112D1W3	F309D1	
UEL310D1W3	F310D1	4.6
UEL310-113D1W3	F310D1	10
UEL310-114D1W3	F310D1	
UEL310-115D1W3	F310D1	
UEL311D1W3	F311D1	5.6
UEL311-200D1W3	F311D1	12
UEL311-201D1W3	F311D1	
UEL311-202D1W3	F311D1	
UEL311-203D1W3	F311D1	

Square flanged units cast housing
Eccentric locking collar type

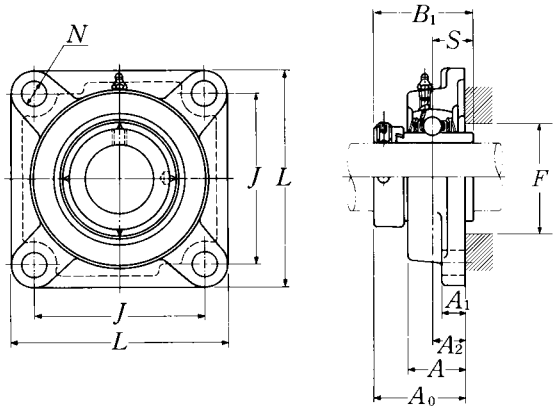

Shaft dia. mm / inch	Unit number [1]	Nominal dimensions mm / inch: L	J	A2	A1	A	N	A0	B1	S	F min.	Bolt size mm / inch
60	UELF312D1W3	195	150	33	22	56	23	81.45	79.4	30.95	—	M20
2 1/4	UELF312-204D1W3											
2 5/16	UELF312-205D1W3	7 11/16	5 29/32	1 19/64	7/8	2 7/32	29/32	3 13/64	3.126	1.219	—	3/4
2 3/8	UELF312-206D1W3											
2 7/16	UELF312-207D1W3											
65	UELF313D1W3	208	166	33	22	58	23	86.15	85.7	32.55	93	M20
2 1/2	UELF313-208D1W3	8 3/16	6 17/32	1 19/64	7/8	2 9/32	29/32	3 25/64	3.374	1.281	3 21/32	3/4
2 9/16	UELF313-209D1W3											
70	UELF314D1W3	226	178	36	25	61	25	93.95	92.1	34.15	—	M22
2 5/8	UELF314-210D1W3											
2 11/16	UELF314-211D1W3	8 29/32	6 1/64	1 27/64	31/32	2 13/32	63/64	3 45/64	3.626	1.344	—	7/8
2 3/4	UELF314-212D1W3											
75	UELF315D1W3	236	184	39	25	66	25	101.7	100	37.3	106	M22
2 13/16	UELF315-213D1W3											
2 7/8	UELF315-214D1W3	9 9/32	7 1/4	1 17/32	31/32	2 19/32	63/64	4	3.937	1.469	4 11/64	7/8
2 15/16	UELF315-215D1W3											
3	UELF315-300D1W3											
80	UELF316D1W3	250	196	38	27	68	31	103.9	106.4	40.5	112	M27
3 1/16	UELF316-301D1W3											
3 1/8	UELF316-302D1W3	9 27/32	7 23/32	1 1/2	1 1/16	2 11/16	1 7/32	4 3/32	4.189	1.594	4 13/32	1
3 3/16	UELF316-303D1W3											
85	UELF317D1W3	260	204	44	27	74	31	111.45	109.5	42.05	119	M27
3 1/4	UELF317-304D1W3											
3 5/16	UELF317-305D1W3	10 1/4	8 1/32	1 47/64	1 1/16	2 29/32	1 7/32	4 25/64	4.311	1.656	4 11/16	1
3 7/16	UELF317-307D1W3											
90	UELF318D1W3	280	216	44	30	76	35	116.25	115.9	43.65	125	M30
3 7/16	UELF318-307D1W3	11 1/32	8 1/2	1 47/64	1 3/16	3	1 3/8	4 37/64	4.563	1.719	4 59/64	1 1/8
3 1/2	UELF318-308D1W3											

Remarks: 1) These numbers indicate relubricatable type. If maintenance free type is needed, please order without suffix "D1".
2) Inner race face does not protrude from the housing face except UELF305 and UELF316.
Note: Please refer to page 36 for size of grease fitting.

Bearing number	Housing [1)] number	Mass of unit kg	lb
UEL312D1W3	F312D1	6.7	
UEL312-204D1W3	F312D1		
UEL312-205D1W3	F312D1	15	
UEL312-206D1W3	F312D1		
UEL312-207D1W3	F312D1		
UEL313D1W3	F313D1	8.4	
UEL313-208D1W3	F313D1	19	
UEL313-209D1W3	F313D1		
UEL314D1W3	F314D1	10	
UEL314-210D1W3	F314D1		
UEL314-211D1W3	F314D1	22	
UEL314-212D1W3	F314D1		
UEL315D1W3	F315D1	12	
UEL315-213D1W3	F315D1		
UEL315-214D1W3	F315D1	26	
UEL315-215D1W3	F315D1		
UEL315-300D1W3	F315D1		
UEL316D1W3	F316D1	15	
UEL316-301D1W3	F316D1		
UEL316-302D1W3	F316D1	33	
UEL316-303D1W3	F316D1		
UEL317D1W3	F317D1	16	
UEL317-304D1W3	F317D1		
UEL317-305D1W3	F317D1	35	
UEL317-307D1W3	F317D1		
UEL318D1W3	F318D1	20	
UEL318-308D1W3	F318D1	44	
UEL318-308D1W3	F318D1		

Square flanged units cast housing
Eccentric locking collar type

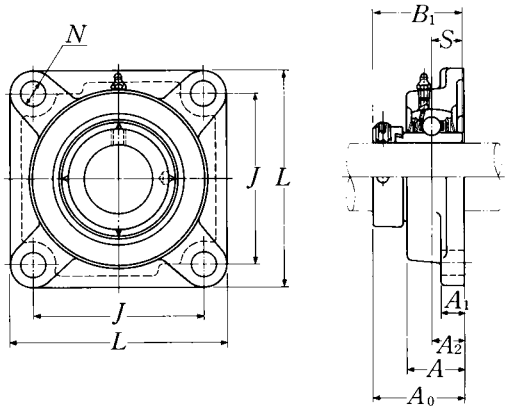

Shaft dia. mm / inch	Unit number [1]	Nominal dimensions mm / inch L	J	A2	A1	A	N	A0	B1	S	Bolt size mm / inch	Bearing number
95	UELF319D1W3	290	228	59	30	94	35	142.4	122.3	38.9	M30	UEL319D1W3
3 5/8	UELF319-310D1W3											UEL319-310D1W3
3 11/16	UELF319-311D1W3	11 13/32	8 31/32	2 21/64	1 3/16	3 11/16	1 3/8	5 39/64	4.815	1.531	1 1/8	UEL319-311D1W3
3 3/4	UELF319-312D1W3											UEL319-312D1W3
100	UELF320D1W3	310	242	59	32	94	38	137.6	128.6	50	M33	UEL320D1W3
3 13/16	UELF320-313D1W3											UEL320-313D1W3
3 7/8	UELF320-314D1W3	12 7/32	9 17/32	2 21/64	1 1/4	3 11/16	1 1/2	5 27/64	5.063	1.969	1 1/4	UEL320-314D1W3
3 15/16	UELF320-315D1W3											UEL320-315D1W3
4	UELF320-400D1W3											UEL320-400D1W3
105	UELF321D1W3	310	242	59	32	94	38	150.3	139.7	48.4	M33	UEL321D1W3
110	UELF322D1W3	340	266	60	35	96	41	152.1	141.3	49.2	M36	UEL322D1W3

Remarks: 1) These numbers indicate relubricatable type. If maintenance free type is needed, please order without suffix "D1".
Note: Please refer to page 36 for size of grease fitting.

Housing [1)] number	Mass of unit kg	lb
F319D1	24	
F319D1		
F319D1	53	
F319D1		
F320D1	29	
F320D1		
F320D1	64	
F320D1		
F320D1		
F321D1	28	
F322D1	37	

Square flanged units cast housing w/spigot joint
Eccentric locking collar type

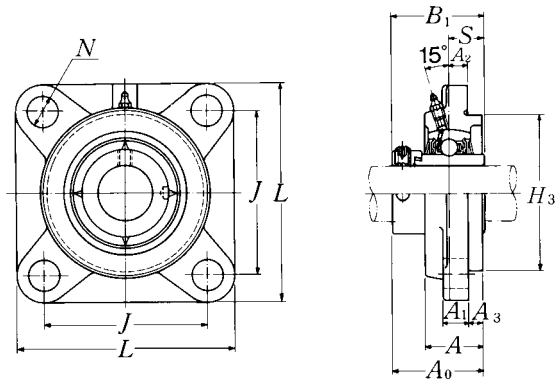

Shaft dia. mm / inch	Unit number [1]	Nominal dimensions mm / inch L	J	A2	N	A3	A1	A	H3	A0	B1	S	Bolt size mm / inch
25	UELFS305D1W3	110	80	9	16	7	13	29	80	46.1	46.8	16.7	M14
13/16	UELFS305-013D1W3												
7/8	UELFS305-014D1W3	4 11/32	3 5/32	23/64	5/8	9/32	1/2	1 9/64	3.1496	1 13/16	1.843	0.657	1/2
15/16	UELFS305-015D1W3												
1	UELFS305-100D1W3												
30	UELFS306D1W3	125	95	10	16	8	15	32	90	50.5	50	17.5	M14
1 1/16	UELFS306-101D1W3												
1 1/8	UELFS306-102D1W3	4 29/32	3 47/64	25/64	5/8	5/16	19/32	1 17/64	3.5433	1 63/64	1.969	0.689	1/2
1 3/16	UELFS306-103D1W3												
35	UELFS307D1W3	135	100	11	19	9	16	36	100	53.3	51.6	18.3	M16
1 1/4	UELFS307-104D1W3												
1 5/16	UELFS307-105D1W3	5 5/16	3 15/16	7/16	3/4	23/64	5/8	1 13/32	3.9370	2 3/32	2.031	0.720	5/8
1 3/8	UELFS307-106D1W3												
1 7/16	UELFS307-107D1W3												
40	UELFS308D1W3	150	112	13	19	10	17	40	115	60.3	57.1	19.8	M16
1 1/2	UELFS308-108D1W3	5 29/32	4 13/32	33/64	3/4	25/64	21/32	1 9/16	4.5276	2 3/8	2.248	0.780	5/8
1 9/16	UELFS308-109D1W3												
45	UELFS309D1W3	160	125	14	19	11	18	44	125	63.9	58.7	19.8	M16
1 5/8	UELFS309-110D1W3												
1 11/16	UELFS309-111D1W3	6 5/16	4 59/64	35/64	3/4	7/16	23/32	1 47/64	4.9213	2 33/64	2.311	0.780	5/8
1 3/4	UELFS309-112D1W3												
50	UELFS310D1W3	175	132	16	23	12	19	48	140	70	66.6	24.6	M20
1 13/16	UELFS310-113D1W3												
1 7/8	UELFS310-114D1W3	6 7/8	5 13/64	5/8	29/32	15/32	3/4	1 57/64	5.5118	2 3/4	2.622	0.969	3/4
1 15/16	UELFS310-115D1W3												
55	UELFS311D1W3	185	140	17	23	13	20	52	150	75.2	73	27.8	M20
2	UELFS311-200D1W3												
2 1/16	UELFS311-201D1W3	7 9/32	5 33/64	43/64	29/32	33/64	25/32	2 3/64	5.9055	2 61/64	2.874	1.094	3/4
2 1/8	UELFS311-202D1W3												
2 3/16	UELFS311-203D1W3												

Remarks: 1) These numbers indicate relubricatable type. If maintenance free type is needed, please order without suffix "D1".
Note: Please refer to page 36 for size of grease fitting.

Bearing number	Housing [1)] number	Mass of unit kg lb
UEL305D1W3	FS305D1	1.3
UEL305-013D1W3	FS305D1	
UEL305-014D1W3	FS305D1	2.9
UEL305-015D1W3	FS305D1	
UEL305-100D1W3	FS305D1	
UEL306D1W3	FS306D1	1.9
UEL306-101D1W3	FS306D1	
UEL306-102D1W3	FS306D1	4.2
UEL306-103D1W3	FS306D1	
UEL307D1W3	FS307D1	2.3
UEL307-104D1W3	FS307D1	
UEL307-105D1W3	FS307D1	5.1
UEL307-106D1W3	FS307D1	
UEL307-107D1W3	FS307D1	
UEL308D1W3	FS308D1	3.3
UEL308-108D1W3	FS308D1	7.3
UEL308-109D1W3	FS308D1	
UEL309D1W3	FS309D1	4.0
UEL309-110D1W3	FS309D1	
UEL309-111D1W3	FS309D1	8.8
UEL309-112D1W3	FS309D1	
UEL310D1W3	FS310D1	5.2
UEL310-113D1W3	FS310D1	
UEL310-114D1W3	FS310D1	11
UEL310-115D1W3	FS310D1	
UEL311D1W3	FS311D1	6.2
UEL311-200D1W3	FS311D1	
UEL311-201D1W3	FS311D1	14
UEL311-202D1W3	FS311D1	
UEL311-203D1W3	FS311D1	

Square flanged units cast housing w/spigot joint
Eccentric locking collar type

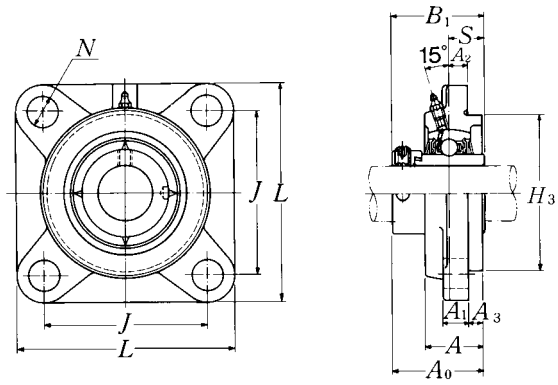

Shaft dia. mm / inch	Unit number [1]	Nominal dimensions mm / inch L	J	A2	N	A3	A1	A	H3	A0	B1	S	Bolt size mm / inch
60	UELFS312D1W3	195	150	19	23	14	22	56	160	81.5	79.4	30.95	M20
2 1/4	UELFS312-204D1W3												
2 5/16	UELFS312-205D1W3	7 11/16	5 29/32	3/4	29/32	35/64	7/8	2 13/16	6.2992	3 13/64	3.126	1.219	3/4
2 3/8	UELFS312-206D1W3												
2 7/16	UELFS312-207D1W3												
65	UELFS313D1W3	208	166	15	23	18	22	58	175	86.2	85.7	32.55	M20
2 1/2	UELFS313-208D1W3	8 3/16	6 17/32	19/32	29/32	45/64	7/8	2 9/32	6.8898	3 25/64	3.374	1.281	3/4
2 9/16	UELFS313-209D1W3												
70	UELFS314D1W3	226	178	18	25	18	25	61	185	94.0	92.1	34.15	M22
2 5/8	UELFS314-210D1W3												
2 11/16	UELFS314-211D1W3	8 29/32	7 1/64	45/64	63/64	45/64	31/32	2 13/32	7.2835	3 45/64	3.626	1.344	7/8
2 3/4	UELFS314-212D1W3												
75	UELFS315D1W3	236	184	21	25	18	25	66	200	101.7	100	37.3	M22
2 13/16	UELFS315-213D1W3												
2 7/8	UELFS315-214D1W3	9 9/32	7 1/4	53/64	63/64	45/64	31/32	2 19/32	7.8740	4	3.937	1.469	7/8
2 15/16	UELFS315-215D1W3												
3	UELFS315-300D1W3												
80	UELFS316D1W3	250	196	18	31	20	27	68	210	103.9	106.4	40.5	M27
3 1/16	UELFS316-301D1W3												
3 1/8	UELFS316-302D1W3	9 27/32	7 23/32	45/64	1 7/32	25/32	1 1/16	2 43/64	8.2677	4 3/32	4.189	1.594	1
3 3/16	UELFS316-303D1W3												
85	UELFS317D1W3	260	204	24	31	20	27	74	220	111.5	109.5	42.05	M27
3 1/4	UELFS317-304D1W3												
3 5/16	UELFS317-305D1W3	10 1/4	8 1/32	15/16	1 7/32	25/32	1 1/16	2 29/32	8.6614	4 25/64	4.311	1.656	1
3 7/16	UELFS317-307D1W3												
90	UELFS318D1W3	280	216	24	35	20	30	76	240	116.3	115.9	43.65	M30
3 7/16	UELFS318-307D1W3	11 1/32	8 1/2	15/16	1 3/8	25/32	1 3/16	2 63/64	9.4488	4 37/64	4.563	1.719	1 1/8
3 1/2	UELFS318-308D1W3												

Remarks: 1) These numbers indicate relubricatable type. If maintenance free type is needed, please order without suffix "D1".
Note: Please refer to page 36 for size of grease fitting.

Bearing number	Housing [1] number	Mass of unit kg	lb
UEL312D1W3	FS312D1	7.4	16
UEL312-204D1W3	FS312D1		
UEL312-205D1W3	FS312D1		
UEL312-206D1W3	FS312D1		
UEL312-207D1W3	FS312D1		
UEL313D1W3	FS313D1	9.0	20
UEL313-208D1W3	FS313D1		
UEL313-209D1W3	FS313D1		
UEL314D1W3	FS314D1	11	24
UEL314-210D1W3	FS314D1		
UEL314-211D1W3	FS314D1		
UEL314-212D1W3	FS314D1		
UEL315D1W3	FS315D1	13	29
UEL315-213D1W3	FS315D1		
UEL315-214D1W3	FS315D1		
UEL315-215D1W3	FS315D1		
UEL315-300D1W3	FS315D1		
UEL316D1W3	FS316D1	16	35
UEL316-301D1W3	FS316D1		
UEL316-302D1W3	FS316D1		
UEL316-303D1W3	FS316D1		
UEL317D1W3	FS317D1	18	40
UEL317-304D1W3	FS317D1		
UEL317-305D1W3	FS317D1		
UEL317-307D1W3	FS317D1		
UEL318D1W3	FS318D1	22	49
UEL318-307D1W3	FS318D1		
UEL318-308D1W3	FS318D1		

Square flanged units cast housing w/spigot joint
Eccentric locking collar type

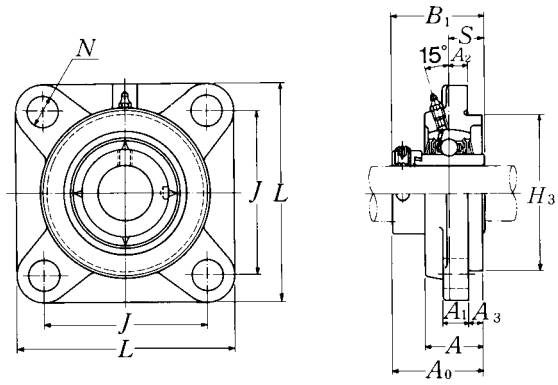

Shaft dia. mm / inch	Unit number [1]	Nominal dimensions mm / inch L	J	A2	N	A3	A1	A	H3	A0	B1	S	Bolt size mm / inch
95	UELFS319D1W3	290	228	39	35	20	30	94	250	142.4	122.3	38.9	M30
3 5/8	UELFS319-310D1W3												
3 11/16	UELFS319-311D1W3	11 13/32	8 31/32	1 17/32	1 3/8	25/32	1 3/16	3 45/64	9.8425	5 39/64	4.815	1.531	1 1/8
3 3/4	UELFS319-312D1W3												
100	UELFS320D1W3	310	242	39	38	20	32	94	260	137.6	128.6	50	M33
3 13/16	UELFS320-313D1W3												
3 7/8	UELFS320-314D1W3	12 7/32	9 17/32	1 17/32	1 1/2	25/32	1 1/4	3 45/64	10.2362	5 27/64	5.063	1.969	1 1/4
3 15/16	UELFS320-315D1W3												
4	UELFS320-400D1W3												
105	UELFS321D1W3	310	242	39	38	20	32	94	260	150.3	139.7	48.4	M33
110	UELFS322D1W3	340	266	35	41	25	35	96	300	152.1	141.3	49.2	M36

Remarks: 1) These numbers indicate relubricatable type. If maintenance free type is needed, please order without suffix "D1".
Note: Please refer to page 36 for size of grease fitting.

Bearing number	Housing [1] number	Mass of unit kg lb
UEL319D1W3	FS319D1	26
UEL319-310D1W3	FS319D1	
UEL319-311D1W3	FS319D1	57
UEL319-312D1W3	FS319D1	
UEL320D1W3	FS320D1	31
UEL320-313D1W3	FS320D1	
UEL320-314D1W3	FS320D1	68
UEL320-315D1W3	FS320D1	
UEL320-400D1W3	FS320D1	
UEL321D1W3	FS321D1	31
UEL322D1W3	FS322D1	41

Round flanged units cast housing w/spigot joint
Eccentric locking collar type

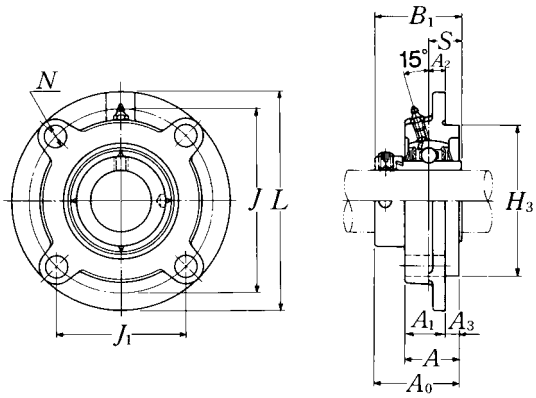

Shaft dia. mm / inch	Unit number [1]	Nominal dimensions mm / inch L	J	(J1)	A2	N	A3	A1	A	H3	A0	B1	S	Bolt size mm / inch
20	UELFC204D1W3	100	78	55.2	10	12	5	20.5	25.5	62	41.6	43.7	17.1	M10
3/4	UELFC204-012D1W3	3 15/16	3 5/64	2 11/64	25/64	15/32	13/64	13/16	1	2.4409	1 41/64	1.720	0.673	3/8
25	UELFC205D1W3	115	90	63.6	10	12	6	21	27	70	42.9	44.4	17.45	M10
13/16	UELFC205-013D1W3													
7/8	UELFC205-014D1W3	4 17/32	3 35/64	2 1/2	25/64	15/32	15/64	13/16	1 1/16	2.7559	1 11/16	1.748	0.687	3/8
15/16	UELFC205-015D1W3													
1	UELFC205-100D1W3													
30	UELFC206D1W3	125	100	70.7	10	12	8	23	31	80	48.1	48.4	18.25	M10
1 1/16	UELFC206-110D1W3													
1 1/8	UELFC206-102D1W3	4 29/32	3 15/16	2 25/32	25/64	15/32	5/16	29/32	1 7/32	3.1496	1 57/64	1.906	0.719	3/8
1 3/16	UELFC206-103D1W3													
1 1/4	UELFC206-104D1W3													
35	UELFC207D1W3	135	110	77.8	11	14	8	26	34	90	51.3	51.1	18.8	M12
1 1/4	UELFC207-104D1W3													
1 5/16	UELFC207-105D1W3	5 5/16	4 21/64	3 1/16	7/16	35/64	5/16	1 1/32	1 11/32	3.5433	2 1/64	2.012	0.740	7/16
1 3/8	UELFC207-106D1W3													
1 7/16	UELFC207-107D1W3													
40	UELFC208D1W3	145	120	84.9	11	14	10	26	36	100	55.9	56.3	21.4	M12
1 1/2	UELFC208-108D1W3	5 23/32	4 23/32	3 11/32	7/16	35/64	25/64	1 1/32	1 27/64	3.9370	2 13/64	2.217	0.843	7/16
1 9/16	UELFC208-109D1W3													
45	UELFC209D1W3	160	132	93.3	10	16	12	26	38	105	56.9	56.3	21.4	M14
1 5/8	UELFC209-110D1W3													
1 11/16	UELFC209-111D1W3	6 5/16	5 13/64	3 43/64	25/64	5/8	15/32	1 1/32	1 1/2	4.1339	2 15/64	2.217	0.843	1/2
1 3/4	UELFC209-112D1W3													
50	UELFC210D1W3	165	138	97.6	10	16	12	28	40	110	60.1	62.7	24.6	M14
1 13/16	UELFC210-113D1W3													
1 7/8	UELFC210-114D1W3	6 1/2	5 7/16	3 27/32	25/64	5/8	15/32	1 3/32	1 37/64	4.3307	2 23/64	2.469	0.969	1/2
1 15/16	UELFC210-115D1W3													
2	UELFC210-200D1W3													

Remarks: 1) These numbers indicate relubricatable type. If maintenance free type is needed, please order without suffix "D1".
Note: Please refer to page 36 for size of grease fitting.

Bearing number	Housing [1] number	Mass of unit kg lb
UEL204D1W3	FC204D1	0.8
UEL204-012D1W3	FC204D1	1.8
UEL205D1W3	FC205D1	1.1
UEL205-013D1W3	FC205D1	2.4
UEL205-014D1W3	FC205D1	
UEL205-015D1W3	FC205D1	
UEL205-100D1W3	FC205D1	
UEL206D1W3	FC206D1	1.4
UEL206-101D1W3	FC206D1	3.1
UEL206-102D1W3	FC206D1	
UEL206-103D1W3	FC206D1	
UEL206-104D1W3	FC206D1	
UEL207D1W3	FC207D1	1.8
UEL207-104D1W3	FC207D1	4.0
UEL207-105D1W3	FC207D1	
UEL207-106D1W3	FC207D1	
UEL207-107D1W3	FC207D1	
UEL208D1W3	FC208D1	2.1
UEL208-108D1W3	FC208D1	4.6
UEL208-109D1W3	FC208D1	
UEL209D1W3	FC209D1	2.8
UEL209-110D1W3	FC209D1	6.2
UEL209-111D1W3	FC209D1	
UEL209-112D1W3	FC209D1	
UEL210D1W3	FC210D1	3.1
UEL210-113D1W3	FC210D1	6.8
UEL210-114D1W3	FC210D1	
UEL210-115D1W3	FC210D1	
UEL210-200D1W3	FC210D1	

Round flanged units cast housing w/spigot joint
Eccentric locking collar type

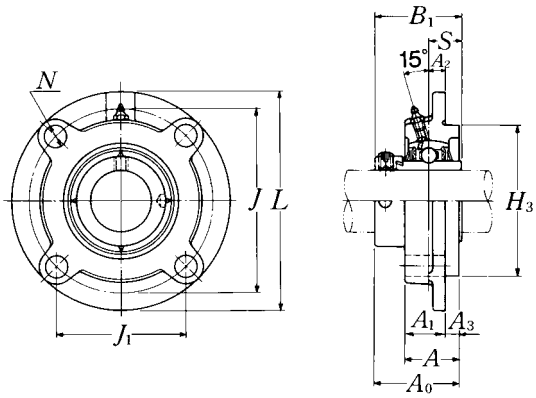

Shaft dia. mm / inch	Unit number [1]	Nominal dimensions mm / inch L	J	(J1)	A2	N	A3	A1	A	H3	A0	B1	S	Bolt size mm / inch
55	UELFC211D1W3	185	150	106.1	13	19	12	31	43	125	68.6	71.4	27.75	M16
2	UELFC211-200D1W3													
2 1/16	UELFC211-201D1W3	7 9/32	5 29/32	4 11/64	33/64	3/4	15/32	1 7/32	1 11/16	4.9213	2 45/64	2.811	1.093	5/8
2 1/8	UELFC211-202D1W3													
2 3/16	UELFC211-203D1W3													
60	UELFC212D1W3	195	160	113.1	17	19	12	36	48	135	75.8	77.8	30.95	M16
2 1/4	UELFC212-204D1W3													
2 5/16	UELFC212-205D1W3	7 11/16	6 19/64	4 29/64	43/64	3/4	15/32	1 13/32	1 57/64	5.3150	2 63/64	3.063	1.219	5/8
2 3/8	UELFC212-206D1W3													
2 7/16	UELFC212-207D1W3													
65	UELFC213D1W3	205	170	120.2	16	19	14	36	50	145	81.6	85.7	34.15	M16
2 1/2	UELFC213-208D1W3	8 1/16	6 11/16	4 47/64	5/8	3/4	35/64	1 13/32	1 31/32	5.7087	3 7/32	3.374	1.344	5/8
2 9/16	UELFC213-209D1W3													
70	UELFC214D1W3	215	177	125.2	17	19	14	40	54	150	82.6	85.7	34.15	M16
2 5/8	UELFC214-210D1W3													
2 11/16	UELFC214-211D1W3	8 15/32	6 31/32	4 59/64	43/64	3/4	35/64	1 9/16	2 1/8	5.9055	3 1/4	3.374	1.344	5/8
2 3/4	UELFC214-212D1W3													
75	UELFC215D1W3	220	184	130.1	18	19	16	40	56	160	88.7	92	37.3	M16
2 13/16	UELFC215-213D1W3													
2 7/8	UELFC215-214D1W3	8 21/32	7 1/4	5 1/8	45/64	3/4	5/8	1 9/16	2 13/64	6.2992	3 31/64	3.622	1.469	5/8
2 15/16	UELFC215-215D1W3													
3	UELFC215-300D1W3													

Remarks: 1) These numbers indicate relubricatable type. If maintenance free type is needed, please order without suffix "D1".
Note: Please refer to page 36 for size of grease fitting.

Bearing number	Housing [1)] number	Mass of unit kg	lb
UEL211D1W3	FC211D1	4.3	
UEL211-200D1W3	FC211D1		
UEL211-201D1W3	FC211D1	9.5	
UEL211-202D1W3	FC211D1		
UEL211-203D1W3	FC211D1		
UEL212D1W3	FC212D1	5.2	
UEL212-204D1W3	FC212D1		
UEL212-205D1W3	FC212D1	11	
UEL212-206D1W3	FC212D1		
UEL212-207D1W3	FC212D1		
UEL213D1W3	FC213D1	6.5	
UEL213-208D1W3	FC213D1	14	
UEL213-209D1W3	FC213D1		
UEL214D1W3	FC214D1	7.4	
UEL214-210D1W3	FC214D1		
UEL214-211D1W3	FC214D1	16	
UEL214-212D1W3	FC214D1		
UEL215D1W3	FC215D1	7.8	
UEL215-213D1W3	FC215D1		
UEL215-214D1W3	FC215D1	17	
UEL215-215D1W3	FC215D1		
UEL215-300D1W3	FC215D1		

Rhombus flanged units cast housing
Eccentric locking collar type

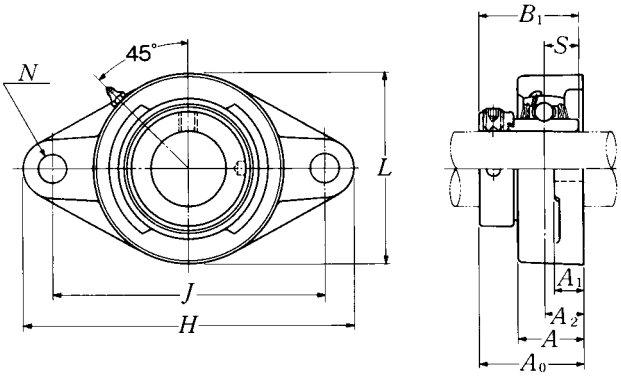

Shaft dia. mm / inch	Unit number [1]	Nominal dimensions mm / inch H	J	A2	A1	A	N	L	A0	B1	S	Bolt size mm / inch
20	UELFLU204D1W3	113	90	19	15	29.5	11.5	61	45.6	43.7	17.1	M10
3/4	UELFLU204-012D1W3	4 7/16	3 35/64	3/4	19/32	1 5/32	29/64	2 13/32	1 51/64	1.720	0.673	5/16
25	UELFLU205D1W3	125	99	19	15	30	11.5	70	45.9	44.4	17.45	M10
13/16	UELFLU205-013D1W3											
7/8	UELFLU205-014D1W3	4 29/32	3 57/64	3/4	19/32	1 3/16	29/64	2 3/4	1 13/16	1.748	0.687	3/8
15/16	UELFLU205-015D1W3											
1	UELFLU205-100D1W3											
30	UELFLU206D1W3	142	116.5	20	16	33	11.5	83	50.1	48.4	18.25	M10
1 1/16	UELFLU206-101D1W3											
1 1/8	UELFLU206-102D1W3	5 19/32	4 19/32	25/32	5/8	1 5/16	29/64	3 9/32	1 31/32	1.906	0.719	3/8
1 3/16	UELFLU206-103D1W3											
1 1/4	UELFLU206-104D1W3											
35	UELFLU207D1W3	156	130	21	17	36	14	96	53.3	51.1	18.8	M12
1 1/4	UELFLU207-104D1W3											
1 5/16	UELFLU207-105D1W3	6 5/32	5 1/8	53/64	21/32	1 13/32	35/64	3 25/32	2 3/32	2.012	0.740	1/2
1 3/8	UELFLU207-106D1W3											
1 7/16	UELFLU207-107D1W3											
40	UELFLU208D1W3	172	143.5	24	17	39	14	105	58.9	56.3	21.4	M12
1 1/2	UELFLU208-108D1W3	6 25/32	5 21/32	15/16	21/32	1 17/32	35/64	4 1/8	2 5/16	2.217	0.843	1/2
1 9/16	UELFLU208-109D1W3											
45	UELFLU209D1W3	180	148.5	24	18	40	16	111	58.9	56.3	21.4	M14
1 5/8	UELFLU209-110D1W3											
1 11/16	UELFLU209-111D1W3	7 3/32	5 27/32	15/16	23/32	1 9/16	5/8	4 3/8	2 5/16	2.217	0.843	1/2
1 3/4	UELFLU209-112D1W3											
50	UELFLU210D1W3	190	157	28	20	46	18	116	66.1	62.7	24.6	M16
1 13/16	UELFLU210-113D1W3											
1 7/8	UELFLU210-114D1W3	7 15/32	6 3/16	1 7/64	25/32	1 13/16	45/64	4 9/16	2 39/64	2.469	0.969	5/8
1 15/16	UELFLU210-115D1W3											
2	UELFLU210-200D1W3											

Remarks: 1) These numbers indicate relubricatable type. If maintenance free type is needed, please order without suffix "D1".
Note: Please refer to page 36 for size of grease fitting.

Bearing number	Housing [1)] number	Mass of unit kg lb
UEL204D1W3	FLU204D1	0.6
UEL204-012D1W3	FLU204D1	1.3
UEL205D1W3	FLU205D1	0.7
UEL205-013D1W3	FLU205D1	1.5
UEL205-014D1W3	FLU205D1	
UEL205-015D1W3	FLU205D1	
UEL205-100D1W3	FLU205D1	
UEL206D1W3	FLU206D1	1.1
UEL206-101D1W3	FLU206D1	2.4
UEL206-102D1W3	FLU206D1	
UEL206-103D1W3	FLU206D1	
UEL206-104D1W3	FLU206D1	
UEL207D1W3	FLU207D1	1.5
UEL207-104D1W3	FLU207D1	3.3
UEL207-105D1W3	FLU207D1	
UEL207-106D1W3	FLU207D1	
UEL207-107D1W3	FLU207D1	
UEL208D1W3	FLU208D1	1.9
UEL208-108D1W3	FLU208D1	4.2
UEL208-109D1W3	FLU208D1	
UEL209D1W3	FLU209D1	2.3
UEL209-110D1W3	FLU209D1	5.1
UEL209-111D1W3	FLU209D1	
UEL209-112D1W3	FLU209D1	
UEL210D1W3	FLU210D1	2.9
UEL210-113D1W3	FLU210D1	6.4
UEL210-114D1W3	FLU210D1	
UEL210-115D1W3	FLU210D1	
UEL210-200D1W3	FLU210D1	

Rhombus flanged units cast housing
Eccentric locking collar type

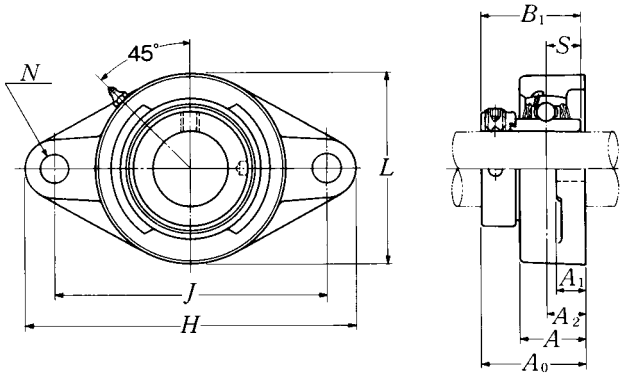

Shaft dia. mm / inch	Unit number [1]	Nominal dimensions mm / inch H	J	A2	A1	A	N	L	A0	B1	S	Bolt size mm / inch
55	UELFLU211D1W3	217	184	31	21	49	18	134	74.6	71.4	27.75	M16
2	UELFLU211-200D1W3											
2 1/16	UELFLU211-201D1W3	8 17/32	7 1/4	1 7/32	13/16	1 15/16	45/64	5 9/32	2 15/16	2.811	1.093	5/8
2 1/8	UELFLU211-202D1W3											
2 3/16	UELFLU211-203D1W3											
60	UELFLU212D1W3	235	202	34	21	53	18	138	80.8	77.8	30.95	M16
2 1/4	UELFLU212-204D1W3											
2 5/16	UELFLU212-205D1W3	9 1/4	7 61/64	1 11/32	13/16	2 3/32	45/64	5 7/16	3 3/16	3.063	1.219	5/8
2 3/8	UELFLU212-206D1W3											
2 7/16	UELFLU212-207D1W3											
65	UELFLU213D1W3	248	210	38	22	59	20.5	152	89.55	85.7	34.15	M18
2 1/2	UELFLU213-208D1W3	9 3/4	8 17/64	1 1/2	7/8	2 5/16	13/16	5 31/32	3 17/32	3.374	1.344	5/8
2 9/16	UELFLU213-209D1W3											
70	UELFLU214D1W3	257	216	38	22	62	20.5	159	89.55	85.7	34.15	M18
2 5/8	UELFLU214-210D1W3											
2 11/16	UELFLU214-211D1W3	10 1/8	8 1/2	1 1/2	7/8	2 7/16	13/16	6 1/4	3 17/32	3.374	1.344	5/8
2 3/4	UELFLU214-212D1W3											
75	UELFLU215D1W3	266	225	41	22	65	20.5	165	95.7	92	37.3	M18
2 13/16	UELFLU215-213D1W3											
2 7/8	UELFLU215-214D1W3	10 15/32	8 55/64	1 39/64	7/8	2 9/16	13/16	6 1/2	3 49/64	3.622	1.469	5/8
2 15/16	UELFLU215-215D1W3											
3	UELFLU215-300D1W3											

Remarks: 1) These numbers indicate relubricatable type. If maintenance free type is needed, please order without suffix "D1".
Note: Please refer to page 36 for size of grease fitting.

Bearing number	Housing [1)] number	Mass of unit kg lb
UEL211D1W3	FLU211D1	3.6
UEL211-200D1W3	FLU211D1	7.9
UEL211-201D1W3	FLU211D1	
UEL211-202D1W3	FLU211D1	
UEL211-203D1W3	FLU211D1	
UEL212D1W3	FLU212D1	4.0
UEL212-204D1W3	FLU212D1	8.8
UEL212-205D1W3	FLU212D1	
UEL212-206D1W3	FLU212D1	
UEL212-207D1W3	FLU212D1	
UEL213D1W3	FLU213D1	5.6
UEL213-208D1W3	FLU213D1	12
UEL213-209D1W3	FLU213D1	
UEL214D1W3	FLU214D1	6.3
UEL214-210D1W3	FLU214D1	14
UEL214-211D1W3	FLU214D1	
UEL214-212D1W3	FLU214D1	
UEL215D1W3	FLU215D1	6.8
UEL215-213D1W3	FLU215D1	15
UEL215-214D1W3	FLU215D1	
UEL215-215D1W3	FLU215D1	
UEL215-300D1W3	FLU215D1	

Rhombus flanged units cast housing
Eccentric locking collar type

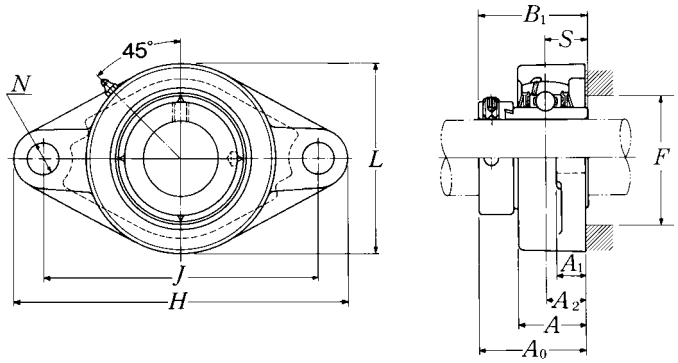

Shaft dia. mm / inch	Unit number [1]	Nominal dimensions H	J	A2	A1	A (mm / inch)	N	L	A0	B1	S	F min.	Bolt size mm / inch
20	UELFL204D1W3	113	90	15	11	25.5	12	60	41.6	43.7	17.1	34	M10
3/4	UELFL204-012D1W3	4 7/16	3 35/64	19/32	7/16	1	15/32	2 3/8	1 41/64	1.720	0.673	1 11/32	3/8
25	UELFL205D1W3	130	99	16	13	27	16	68	42.9	44.4	17.45	38	M14
13/16	UELFL205-013D1W3												
7/8	UELFL205-014D1W3	5 1/8	3 57/64	5/8	1/2	1 1/16	5/8	2 11/64	1 11/16	1.748	0.687	1 1/2	1/2
15/16	UELFL205-015D1W3												
1	UELFL205-100D1W3												
30	UELFL206D1W3	148	117	18	13	31	16	80	48.1	48.4	18.25	45	M14
1 1/6	UELFL206-101D1W3												
1 1/8	UELFL206-102D1W3	5 13/16	4 9/64	45/64	1/2	1 7/32	5/8	3 5/32	1 57/64	1.906	0.719	1 25/32	1/2
1 3/16	UELFL206-103D1W3												
1 1/4	UELFL206-104D1W3												
35	UELFL207D1W3	161	130	19	15	34	16	90	51.3	51.1	18.8	51	M14
1 1/4	UELFL207-104D1W3												
1 5/16	UELFL207-105D1W3	6 11/32	5 1/8	3/4	19/32	1 11/32	5/8	3 17/32	2 1/64	2.012	0.740	2	1/2
1 3/8	UELFL207-106D1W3												
1 7/16	UELFL207-107D1W3												
40	UELFL208D1W3	175	144	21	15	36	16	100	55.9	56.3	21.4	57	M14
1 1/2	UELFL208-108D1W3	6 7/8	5 43/64	53/64	19/32	1 13/32	5/8	3 15/16	2 13/16	2.217	0.843	2 1/4	1/2
1 9/16	UELFL208-109D1W3												
45	UELFL209D1W3	188	148	22	16	38	19	108	56.9	56.3	21.4	62	M16
1 5/8	UELFL209-110D1W3												
1 11/16	UELFL209-111D1W3	7 13/32	5 53/64	55/64	5/8	1 1/2	3/4	4 1/4	2 15/64	2.217	0.843	2 7/16	5/8
1 3/4	UELFL209-112D1W3												
50	UELFL210D1W3	197	157	22	16	40	19	115	60.1	62.7	24.6	67	M16
1 13/16	UELFL210-113D1W3												
1 7/8	UELFL210-114D1W3	7 3/4	6 3/16	55/64	5/8	1 9/16	3/4	4 17/32	2 23/64	2.469	0.969	2 41/64	5/8
1 15/16	UELFL210-115D1W3												
2	UELFL210-200D1W3												

Remarks: 1) These numbers indicate relubricatable type. If maintenance free type is needed, please order without suffix "D1".
Note: Please refer to page 36 for size of grease fitting.

Bearing number	Housing [1)] number	Mass of unit kg	lb
UEL204D1W3	FL204D1	0.5	
UEL204-012D1W3	FL204D1	1.1	
UEL205D1W3	FL205D1	0.7	
UEL205-013D1W3	FL205D1	1.5	
UEL205-014D1W3	FL205D1		
UEL205-015D1W3	FL205D1		
UEL205-100D1W3	FL205D1		
UEL206D1W3	FL206D1	1.0	
UEL206-101D1W3	FL206D1	2.2	
UEL206-102D1W3	FL206D1		
UEL206-103D1W3	FL206D1		
UEL206-104D1W3	FL206D1		
UEL207D1W3	FL207D1	1.3	
UEL207-104D1W3	FL207D1	2.9	
UEL207-105D1W3	FL207D1		
UEL207-106D1W3	FL207D1		
UEL207-107D1W3	FL207D1		
UEL208D1W3	FL208D1	1.6	
UEL208-108D1W3	FL208D1	3.5	
UEL208-109D1W3	FL208D1		
UEL209D1W3	FL209D1	2.0	
UEL209-110D1W3	FL209D1	4.4	
UEL209-111D1W3	FL209D1		
UEL209-112D1W3	FL209D1		
UEL210D1W3	FL210D1	2.2	
UEL210-113D1W3	FL210D1	4.9	
UEL210-114D1W3	FL210D1		
UEL210-115D1W3	FL210D1		
UEL210-200D1W3	FL210D1		

Rhombus flanged units cast housing
Eccentric locking collar type

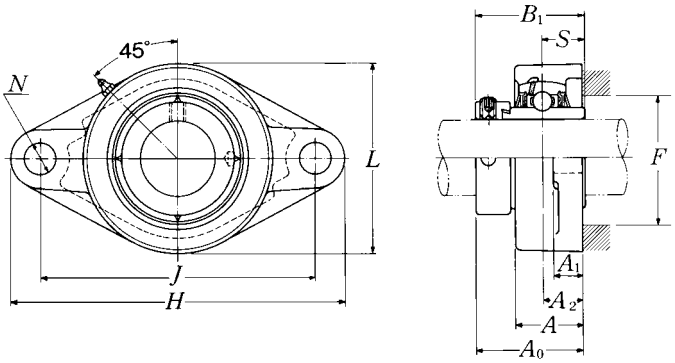

Shaft dia. mm / inch	Unit number [1]	Nominal dimensions H	J	A2	A1	A (mm)	N (inch)	L	A0	B1	S	F min.	Bolt size mm / inch
55	UELFL211D1W3	224	184	25	18	43	19	130	68.6	71.4	27.75	73	M16
2	UELFL211-200D1W3												
2 1/16	UELFL211-201D1W3	8 13/16	7 1/4	63/64	23/32	1 11/16	3/4	5 1/8	2 45/64	2.811	1.093	2 7/8	5/8
2 1/8	UELFL211-202D1W3												
2 3/16	UELFL211-203D1W3												
60	UELFL212D1W3	250	202	29	18	48	23	140	75.8	77.8	30.95	81	M20
2 1/4	UELFL212-204D1W3												
2 5/16	UELFL212-205D1W3	9 27/32	7 61/64	1 9/64	23/32	1 7/8	29/32	5 1/2	2 63/64	3.063	1.219	3 3/16	3/4
2 3/8	UELFL212-206D1W3												
2 7/16	UELFL212-207D1W3												
65	UELFL213D1W3	258	210	30	22	50	23	155	81.55	85.7	34.15	87	M20
2 1/2	UELFL213-208D1W3	10 5/32	8 17/64	1 3/16	7/8	1 31/32	29/32	6 3/32	3 13/64	3.374	1.344	3 7/16	3/4
2 9/16	UELFL213-209D1W3												
70	UELFL214D1W3	265	216	31	22	54	23	160	82.55	85.7	34.15	91	M20
2 5/8	UELFL214-210D1W3												
2 11/16	UELFL214-211D1W3	10 7/16	8 1/2	1 7/32	7/8	2 1/8	29/32	6 5/16	3 1/4	3.374	1.344	3 37/64	3/4
2 3/4	UELFL214-212D1W3												
75	UELFL215D1W3	275	225	34	22	56	23	165	88.7	92	37.3	97	M20
2 13/16	UELFL215-213D1W3												
2 7/8	UELFL215-214D1W3	10 13/16	8 55/64	1 11/32	7/8	2 7/32	29/32	6 1/2	3 31/64	3.622	1.469	3 13/16	3/4
2 15/16	UELFL215-215D1W3												
3	UELFL215-300D1W3												

Remarks: 1) These numbers indicate relubricatable type. If maintenance free type is needed, please order without suffix "D1".
Note: Please refer to page 36 for size of grease fitting.

Bearing number	Housing [1)] number	Mass of unit kg	lb
UEL211D1W3	FL211D1	3.2	
UEL211-200D1W3	FL211D1		
UEL211-201D1W3	FL211D1	7.1	
UEL211-202D1W3	FL211D1		
UEL211-203D1W3	FL211D1		
UEL212D1W3	FL212D1	4.1	
UEL212-204D1W3	FL212D1		
UEL212-205D1W3	FL212D1	9.0	
UEL212-206D1W3	FL212D1		
UEL212-207D1W3	FL212D1		
UEL213D1W3	FL213D1	5.5	
UEL213-208D1W3	FL213D1	12	
UEL213-209D1W3	FL213D1		
UEL214D1W3	FL214D1	5.8	
UEL214-210D1W3	FL214D1		
UEL214-211D1W3	FL214D1	13	
UEL214-212D1W3	FL214D1		
UEL215D1W3	FL215D1	6.3	
UEL215-213D1W3	FL215D1		
UEL215-214D1W3	FL215D1	14	
UEL215-215D1W3	FL215D1		
UEL215-300D1W3	FL215D1		

Rhombus flanged units cast housing
Eccentric locking collar type

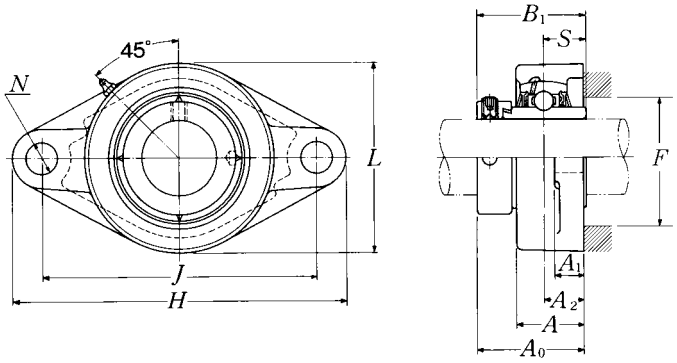

Shaft dia. mm / inch	Unit number [1]	Nominal dimensions H	J	A2	A1	A (mm)	N (inch)	L	A0	B1	S	F min.	Bolt size mm / inch
25	UELFL305D1W3	150	113	16	13	29	19	80	46.1	46.8	16.7	41	M16
13/16	UELFL305-013D1W3												
7/8	UELFL305-014D1W3	5 29/32	4 29/64	5/8	1/2	1 5/32	3/4	3 5/32	1 13/16	1.843	0.657	1 39/64	5/8
15/16	UELFL305-015D1W3												
1	UELFL305-100D1W3												
30	UELFL306D1W3	180	134	18	15	32	23	90	50.5	50	17.5	49	M20
1 1/16	UELFL306-101D1W3												
1 1/8	UELFL306-102D1W3	7 3/32	5 9/32	45/64	19/32	1 1/4	29/32	3 17/32	1 63/64	1.969	0.689	1 15/16	3/4
1 3/16	UELFL306-103D1W3												
35	UELFL307D1W3	185	141	20	16	36	23	100	53.3	51.6	18.3	—	M20
1 1/4	UELFL307-104D1W3												
1 5/16	UELFL307-105D1W3	7 9/32	5 35/64	25/32	5/8	1 13/32	29/32	3 15/16	2 3/32	2.031	0.720	—	3/4
1 3/8	UELFL307-106D1W3												
1 7/16	UELFL307-107D1W3												
40	UELFL308D1W3	200	158	23	17	40	23	112	60.3	57.1	19.8	—	M20
1 1/2	UELFL308-108D1W3	7 7/8	6 7/32	29/32	21/32	1 9/16	29/32	4 13/32	2 3/8	2.248	0.780	—	3/4
1 9/16	UELFL308-109D1W3												
45	UELFL309D1W3	230	177	25	18	44	25	125	63.9	58.7	19.8	—	M22
1 5/8	UELFL309-110D1W3												
1 11/16	UELFL309-111D1W3	9 1/16	6 31/32	63/64	23/32	1 23/32	63/64	4 29/32	2 33/64	2.311	0.780	—	7/8
1 3/4	UELFL309-112D1W3												
50	UELFL310D1W3	240	187	28	19	48	25	140	70	66.6	24.6	—	M22
1 13/16	UELFL310-113D1W3												
1 7/8	UELFL310-114D1W3	9 7/16	7 23/64	1 7/64	3/4	1 7/8	63/64	5 1/2	2 3/4	2.622	0.969	—	7/8
1 15/16	UELFL310-115D1W3												
55	UELFL311D1W3	250	198	30	20	52	25	150	75.2	73	27.8	—	M22
2	UELFL311-200D1W3												
2 1/16	UELFL311-201D1W3	9 27/32	7 51/64	1 3/16	25/32	2 1/16	63/64	5 29/32	2 61/64	2.874	1.094	—	7/8
2 1/8	UELFL311-202D1W3												
2 3/16	UELFL311-203D1W3												

Remarks: 1) These numbers indicate relubricatable type. If maintenance free type is needed, please order without suffix "D1".
2) Inner race face does not protrude from the housing face except UELFL305 and UELFL316.
Note: Please refer to page 36 for size of grease fitting.

Bearing number	Housing [1)] number	Mass of unit kg lb
UEL305D1W3	FL305D1	1.0
UEL305-013D1W3	FL305D1	2.2
UEL305-014D1W3	FL305D1	
UEL305-015D1W3	FL305D1	
UEL305-100D1W3	FL305D1	
UEL306D1W3	FL306D1	1.6
UEL306-101D1W3	FL306D1	3.5
UEL306-102D1W3	FL306D1	
UEL306-103D1W3	FL306D1	
UEL307D1W3	FL307D1	1.8
UEL307-104D1W3	FL307D1	4.0
UEL307-105D1W3	FL307D1	
UEL307-106D1W3	FL307D1	
UEL307-107D1W3	FL307D1	
UEL308D1W3	FL308D1	2.3
UEL308-108D1W3	FL308D1	5.1
UEL308-109D1W3	FL308D1	
UEL309D1W3	FL309D1	3.1
UEL309-110D1W3	FL309D1	6.8
UEL309-111D1W3	FL309D1	
UEL309-112D1W3	FL309D1	
UEL310D1W3	FL310D1	4.2
UEL310-113D1W3	FL310D1	9.3
UEL310-114D1W3	FL310D1	
UEL310-115D1W3	FL310D1	
UEL311D1W3	FL311D1	4.9
UEL311-200D1W3	FL311D1	11
UEL311-201D1W3	FL311D1	
UEL311-202D1W3	FL311D1	
UEL311-203D1W3	FL311D1	

Rhombus flanged units cast housing
Eccentric locking collar type

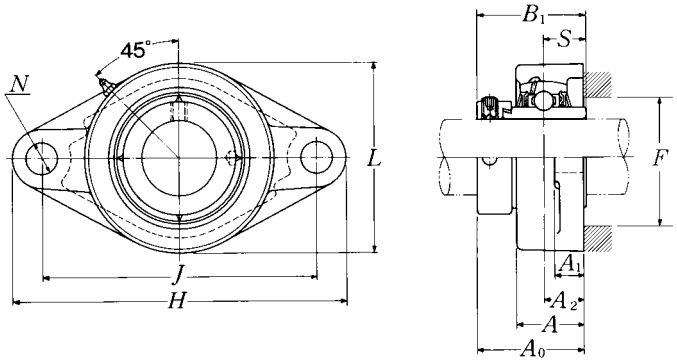

Shaft dia. mm / inch	Unit number [1]	Nominal dimensions H	J	A2	A1	A (mm)	N (inch)	L	A0	B1	S	F min.	Bolt size mm / inch
60	UELFL312D1W3	270	212	33	22	56	31	160	81.45	79.4	30.95	—	M27
2 1/4	UELFL312-204D1W3												
2 5/16	UELFL312-205D1W3	10 5/8	8 11/32	1 19/64	7/8	2 7/32	1 7/32	6 5/16	3 13/64	3.126	1.219	—	1
2 3/8	UELFL312-206D1W3												
2 7/16	UELFL312-207D1W3												
65	UELFL313D1W3	295	240	33	25	58	31	175	86.15	85.7	32.55	93	M27
2 1/2	UELFL313-208D1W3	11 5/8	9 29/64	1 19/64	31/32	2 9/32	1 7/32	6 7/8	3 25/64	3.374	1.281	3 21/32	1
2 9/16	UELFL313-209D1W3												
70	UELFL314D1W3	315	250	36	28	61	35	185	93.95	92.1	34.15	—	M30
2 5/8	UELFL314-210D1W3												
2 11/16	UELFL314-211D1W3	12 13/32	9 27/32	1 27/64	1 3/32	2 13/32	1 3/8	7 9/32	3 45/64	3.626	1.344	—	1 1/8
2 3/4	UELFL314-212D1W3												
75	UELFL315D1W3	320	260	39	30	66	35	195	101.7	100	37.3	106	M30
2 13/16	UELFL315-213D1W3												
2 7/8	UELFL315-214D1W3	12 19/32	10 15/64	1 17/32	1 3/16	2 19/32	1 3/8	7 11/16	4	3.937	1.469	4 11/64	1 1/8
2 15/16	UELFL315-215D1W3												
3	UELFL315-300D1W3												
80	UELFL316D1W3	355	285	38	32	68	38	210	103.9	106.4	40.5	112	M33
3 1/16	UELFL316-301D1W3												
3 1/8	UELFL316-302D1W3	13 31/32	11 7/32	1 1/2	1 1/4	2 11/16	1 1/2	8 9/32	4 3/32	4.189	1.594	4 13/32	1 1/4
3 3/16	UELFL316-303D1W3												
85	UELFL317D1W3	370	300	44	32	74	38	220	111.45	109.5	42.05	119	M33
3 1/4	UELFL317-304D1W3												
3 5/16	UELFL317-305D1W3	14 9/16	11 13/16	1 47/64	1 1/4	2 29/32	1 1/2	8 21/32	4 25/64	4.311	1.656	4 11/16	1 1/4
3 7/16	UELFL317-307D1W3												
90	UELFL318D1W3	385	315	44	36	76	38	235	116.25	115.9	43.65	125	M33
3 7/16	UELFL318-307D1W3	15 5/32	12 13/32	1 47/64	1 13/32	3	1 1/2	9 1/4	4 37/64	4.563	1.719	4 59/64	1 1/4
3 1/2	UELFL318-308D1W3												

Remarks: 1) These numbers indicate relubricatable type. If maintenance free type is needed, please order without suffix "D1".
2) Inner race face does not protrude from the housing face except UELFL305 and UELFL316.

Note: Please refer to page 36 for size of grease fitting.

Bearing number	Housing [1)] number	Mass of unit kg	lb
UEL312D1W3	FL312D1	6.1	
UEL312-204D1W3	FL312D1		
UEL312-205D1W3	FL312D1	13	
UEL312-206D1W3	FL312D1		
UEL312-207D1W3	FL312D1		
UEL313D1W3	FL313D1	8.0	
UEL313-208D1W3	FL313D1	18	
UEL313-209D1W3	FL313D1		
UEL314D1W3	FL314D1	9.2	
UEL314-210D1W3	FL314D1		
UEL314-211D1W3	FL314D1	20	
UEL314-212D1W3	FL314D1		
UEL315D1W3	FL315D1	10	
UEL315-213D1W3	FL315D1		
UEL315-214D1W3	FL315D1	22	
UEL315-215D1W3	FL315D1		
UEL315-300D1W3	FL315D1		
UEL316D1W3	FL316D1	14	
UEL316-301D1W3	FL316D1		
UEL316-302D1W3	FL316D1	31	
UEL316-303D1W3	FL316D1		
UEL317D1W3	FL317D1	16	
UEL317-304D1W3	FL317D1		
UEL317-305D1W3	FL317D1	35	
UEL317-307D1W3	FL317D1		
UEL318D1W3	FL318D1	19	
UEL318-307D1W3	FL318D1	42	
UEL318-308D1W3	FL318D1		

Rhombus flanged units cast housing
Eccentric locking collar type

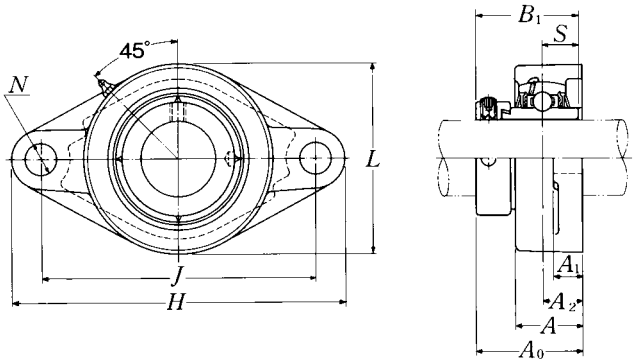

Shaft dia. mm / inch	Unit number 1) 2)	Nominal dimensions mm / inch H	J	A2	A1	A	N	L	A0	B1	S	Bolt size mm / inch	Bearing number
95	UELFL319D1W3	405	330	59	40	94	41	250	142.4	122.3	38.9	M36	UEL319D1W3
3 5/8	UELFL319-310D1W3												UEL319-310D1W3
3 11/16	UELFL319-311D1W3	15 15/16	12 63/64	2 21/64	1 9/16	3 11/16	1 39/64	9 27/32	5 39/64	4.815	1.531	1 3/8	UEL319-311D1W3
3 3/4	UELFL319-312D1W3												UEL319-312D1W3
100	UELFL320D1W3	440	360	59	40	94	44	270	137.6	128.6	50	M39	UEL320D1W3
3 13/16	UELFL320-313D1W3												UEL320-313D1W3
3 7/8	UELFL320-314D1W3	17 5/16	14 11/64	2 21/64	1 9/16	3 11/16	1 47/64	10 5/8	5 27/64	5.063	1.969	1 1/2	UEL320-314D1W3
3 15/16	UELFL320-315D1W3												UEL320-315D1W3
4	UELFL320-400D1W3												UEL320-400D1W3
105	UELFL321D1W3	440	360	59	40	94	44	270	150.3	139.7	48.4	M39	UEL321D1W3
110	UELFL322D1W3	470	390	60	42	96	44	300	152.1	141.3	49.2	M39	UEL322D1W3

Remarks: 1) These numbers indicate relubricatable type. If maintenance free type is needed, please order without suffix "D1".
Note: Please refer to page 36 for size of grease fitting.

Housing [1)] number	Mass of unit kg lb
FL319D1	24
FL319D1	
FL319D1	53
FL319D1	
FL320D1	28
FL320D1	
FL320D1	62
FL320D1	
FL320D1	
FL321D1	30
FL322D1	36

Light rhombus flanged units cast housing
Eccentric locking collar type

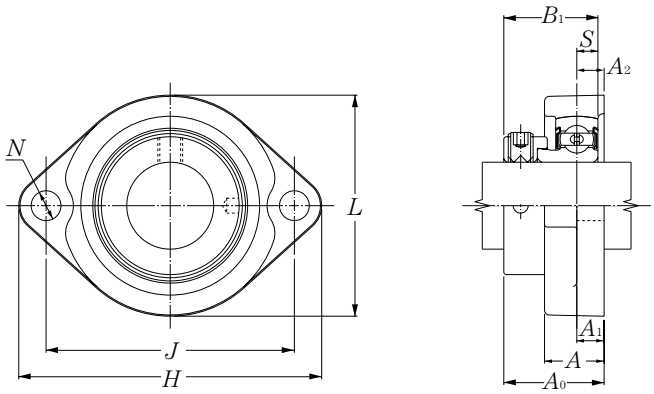

Shaft dia. mm / inch	Unit number [1]	Nominal dimensions H	J	A2	A1	A (mm / inch)	N	L	A0	B1	S	Bolt size mm / inch	Bearing number [1]
12	AELFB201W3	81	63.5	9.5	9.5	18	7	56	31.6	28.6	6.5	M6	AEL201W3
1/2	AELFB201-008W3	3 3/16	2 1/2	3/8	3/8	23/32	9/32	2 7/32	1 1/4	1.126	0.256	1/4	AEL201-008W3
15	AELFB202W3	81	63.5	9.5	9.5	18	7	56	31.6	28.6	6.5	M6	AEL202W3
9/16	AELFB202-009W3	3 3/16	2 1/2	3/8	3/8	23/32	9/32	2 7/32	1 1/4	1.126	0.256	1/4	AEL202-009W3
5/8	AELFB202-010W3												AEL202-010W3
17	AELFB203W3	81	63.5	9.5	9.5	18	7	56	31.6	28.6	6.5	M6	AEL203W3
11/16	AELFB203-011W3	3 3/16	2 1/2	3/8	3/8	23/32	9/32	2 7/32	1 1/4	1.126	0.256	1/4	AEL203-011W3
20	AELFB204W3	90	71.5	11	11	20	10	61	34.5	31	7.5	M8	AEL204W3
3/4	AELFB204-012W3	3 35/64	2 13/16	7/16	7/16	25/32	25/64	2 13/32	1 23/64	1.220	0.295	5/16	AEL204-012W3
25	AELFB205W3	95	76	11	11	20	10	64	34.5	31	7.5	M8	AEL205W3
13/16	AELFB205-013W3												AEL205-013W3
7/8	AELFB205-014W3	3 3/4	2 63/64	7/16	7/16	25/32	25/64	2 17/32	1 23/64	1.220	0.295	5/16	AEL205-014W3
15/16	AELFB205-015W3												AEL205-015W3
1	AELFB205-100W3												AEL205-100W3
30	AELFB206W3	113	90.5	12	12	22.5	12	76	38.7	35.7	9	M10	AEL206W3
1 1/16	AELFB206-101W3												AEL206-101W3
1 1/8	AELFB206-102W3	4 7/16	3 9/16	15/32	15/32	7/8	15/32	3	1 17/32	1.406	0.354	3/8	AEL206-102W3
1 3/16	AELFB206-103W3												AEL206-103W3
1 1/4	AELFB206-104W3												AEL206-104W3
35	AELFB207W3	122	100	11	13	24	12	89	40.4	38.9	9.5	M10	AEL207W3
1 1/4	AELFB207-104W3												AEL207-104W3
1 5/16	AELFB207-105W3	4 51/64	3 15/16	7/16	1/2	15/16	15/32	3 1/2	1 19/32	1.531	0.374	3/8	AEL207-105W3
1 3/8	AELFB207-106W3												AEL207-106W3
1 7/16	AELFB207-107W3												AEL207-107W3

Remarks: 1) If relubricatable type is needed, please order with suffix "D1".

Housing [1] number	Mass of unit kg	lb
FB201	0.3	
FB201	0.7	
FB201	0.3	
FB201	0.7	
FB201	0.3	
FB201	0.7	
FB204	0.4	
FB204	0.9	
FB205	0.4	
FB205	0.9	
FB206	0.6	
FB206	1.3	
FB207	0.9	
FB207	2.0	

Light rhombus flanged units cast housing
Eccentric locking collar type

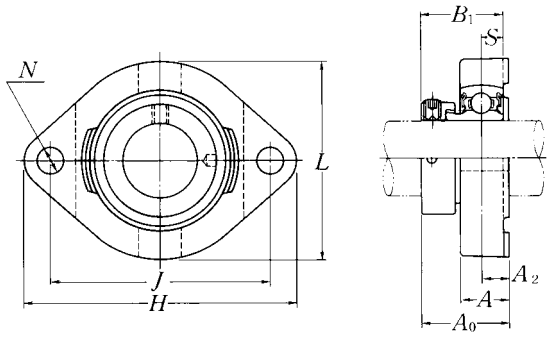

Shaft dia. mm / inch	Unit number 1)	Nominal dimensions mm / inch H	J	A2	A	N	L	A0	B1	S	Bolt size mm / inch	Bearing 1) number	Housing 1) number	Mass of unit kg / lb
12	AELFD201W3	81	63	8.5	15	7	59	30.6	28.6	6.5	M 6	AEL201W3	FD201	0.3
1/2	AELFD201-008W3	3 3/16	2 31/64	21/64	19/32	9/32	2 5/16	1 13/64	1.126	0.256	1/4	AEL201-008W3	FD201	0.7
15	AELFD202W3	81	63	8.5	15	7	59	30.6	28.6	6.5	M 6	AEL202W3	FD201	0.3
9/16	AELFD202-009W3	3 3/16	2 31/64	21/64	19/32	9/32	2 5/16	1 13/64	1.126	0.256	1/4	AEL202-009W3	FD201	0.7
5/8	AELFD202-010W3											AEL202-010W3	FD201	
17	AELFD203W3	81	63	8.5	15	7	59	30.6	28.6	6.5	M 6	AEL203W3	FD201	0.3
11/16	AELFD203-011W3	3 3/16	2 31/64	21/64	19/32	9/32	2 5/16	1 13/64	1.126	0.256	1/4	AEL203-011W3	FD201	0.7
20	AELFD204W3	90	71	9.5	17	10	67	33	31	7.5	M 8	AEL204W3	FD204	0.4
3/4	AELFD204-012W3	3 17/32	2 51/64	3/8	21/32	25/64	2 5/8	1 19/64	1.220	0.295	5/16	AEL204-012W3	FD204	0.9
25	AELFD205W3	95	76	9.5	17	10	71	33	31	7.5	M 8	AEL205W3	FD205	0.5
13/16	AELFD205-013W3											AEL205-013W3	FD205	
7/8	AELFD205-014W3	3 3/4	2 63/64	3/8	21/32	25/64	2 25/32	1 19/64	1.220	0.295	5/16	AEL205-014W3	FD205	1.1
15/16	AELFD205-015W3											AEL205-015W3	FD205	
1	AELFD205-100W3											AEL205-100W3	FD205	
30	AELFD206W3	113	90	12	21	12	84	38.7	35.7	9	M10	AEL206W3	FD206	0.8
1 1/16	AELFD206-101W3											AEL206-101W3	FD206	
1 1/8	AELFD206-102W3	4 7/16	3 17/32	15/32	13/16	15/32	3 5/16	1 17/32	1.406	0.354	3/8	AEL206-102W3	FD206	1.8
1 3/16	AELFD206-103W3											AEL206-103W3	FD206	
1 1/4	AELFD206-104W3											AEL206-104W3	FD206	
35	AELFD207W3	125	100	12.5	22	12	94	41.9	38.9	9.5	M10	AEL207W3	FD207	1.1
1 1/4	AELFD207-104W3											AEL207-104W3	FD207	
1 5/16	AELFD207-105W3	4 29/32	3 15/16	31/64	7/8	15/32	3 11/16	1 21/32	1.531	0.374	3/8	AEL207-105W3	FD207	2.4
1 3/8	AELFD207-106W3											AEL207-106W3	FD207	
1 7/16	AELFD207-107W3											AEL207-107W3	FD207	
40	AELFD208W3	148	119	14.5	25	13.5	104	47.2	43.7	11	M12	AEL208W3	FD208	1.5
1 1/2	AELFD208-108W3	5 53/64	4 11/16	37/64	31/32	17/32	4 3/32	1 27/32	1.720	0.433	7/16	AEL208-108W3	FD208	3.3
1 9/16	AELFD208-109W3											AEL208-109W3	FD208	

Remarks: 1) If relubricatable type is needed, please order with prefix "A-" and suffix "D1".
Example: A-AELFD201D1W3

Light rhombus flanged units cast housing
Eccentric locking collar type

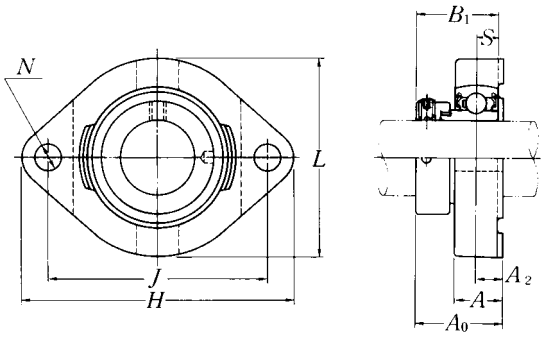

Shaft dia. mm / inch	Unit number 1)	Nominal dimensions H	J	A2	A	N	L	A0	B1	S	Bolt size mm / inch	Bearing 1) number	Housing 1) number	Mass of unit kg / lb
		mm					inch							
12	JELFD201W3	81	63	8.5	15	7	59	30.6	28.6	6.5	M 6	JEL201W3	FD201	0.3
1/2	JELFD201-008W3	3 3/16	2 31/64	21/64	19/32	9/32	2 5/16	1 13/64	1.126	0.256	1/4	JEL201-008W3	FD201	0.7
15	JELFD202W3	81	63	8.5	15	7	59	30.6	28.6	6.5	M 6	JEL202W3	FD201	0.3
9/16	JELFD202-009W3	3 3/16	2 31/64	21/64	19/32	9/32	2 5/16	1 13/64	1.126	0.256	1/4	JEL202-009W3	FD201	0.7
5/8	JELFD202-010W3											JEL202-010W3	FD201	
17	JELFD203W3	81	63	8.5	15	7	59	30.6	28.6	6.5	M 6	JEL203W3	FD201	0.3
11/16	JELFD203-011W3	3 3/16	2 31/64	21/64	19/32	9/32	2 5/16	1 13/64	1.126	0.256	1/4	JEL203-011W3	FD201	0.7
20	JELFD204W3	90	71	9.5	17	10	67	33	31	7.5	M 8	JEL204W3	FD204	0.4
3/4	JELFD204-012W3	3 17/32	2 51/64	3/8	21/32	25/64	2 5/8	1 19/64	1.220	0.295	5/16	JEL204-012W3	FD204	0.9
25	JELFD205W3	95	76	9.5	17	10	71	33	31	7.5	M 8	JEL205W3	FD205	0.5
13/16	JELFD205-013W3											JEL205-013W3	FD205	
7/8	JELFD205-014W3	3 3/4	2 63/64	3/8	21/32	25/64	2 25/32	1 19/64	1.220	0.295	5/16	JEL205-014W3	FD205	0.9
15/16	JELFD205-015W3											JEL205-015W3	FD205	
1	JELFD205-100W3											JEL205-100W3	FD205	
30	JELFD206W3	113	90	12	21	12	84	38.7	35.7	9	M10	JEL206W3	FD206	0.8
1 1/16	JELFD206-101W3											JEL206-101W3	FD206	
1 1/8	JELFD206-102W3	4 7/16	3 17/32	15/32	13/16	15/32	3 5/16	1 17/32	1.406	0.354	3/8	JEL206-102W3	FD206	1.8
1 3/16	JELFD206-103W3											JEL206-103W3	FD206	
1 1/4	JELFD206-104W3											JEL206-104W3	FD206	
35	JELFD207W3	125	100	12.5	22	12	94	41.9	38.9	9.5	M10	JEL207W3	FD207	1.1
1 1/4	JELFD207-104W3											JEL207-104W3	FD207	
1 5/16	JELFD207-105W3	4 29/32	3 15/16	31/64	7/8	15/32	3 11/16	1 21/32	1.531	0.374	3/8	JEL207-105W3	FD207	2.4
1 3/8	JELFD207-106W3											JEL207-106W3	FD207	
1 7/16	JELFD207-107W3											JEL207-107W3	FD207	
40	JELFD208W3	148	119	14.5	25	13.5	104	47.2	43.7	11	M12	JEL208W3	FD208	1.5
1 1/2	JELFD208-108W3	5 53/64	4 11/16	37/64	31/32	17/32	4 3/32	1 27/32	1.720	0.433	7/16	JEL208-108W3	FD208	3.3
1 9/16	JELFD208-109W3											JEL208-109W3	FD208	

Remarks: 1) If relubricatable type is needed, please order with prefix "A-" and suffix "D1".
Example: A-JELFD201D1W3

Round flanged units pressed steel housing
Eccentric locking collar type

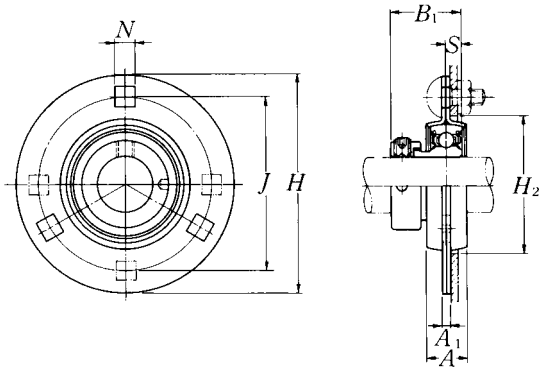

Shaft dia. mm / inch	Unit number	Nominal dimensions mm / inch: H	J	A1	N 1)	A	B1	S	H2 min.	Bolt size mm / inch	Max. load recommended N radial	lbf axial	Bearing number
12	AELPF201W3	81	63.5	4	7.1	14	28.6	6.5	49	M6	2 700	1 350	AEL201W3
1/2	AELPF201-008W3	3 3/16	2 1/2	0.157	9/32	9/16	1.126	0.256	1 59/64	1/4	600	300	AEL201-008W3
15	AELPF202W3	81	63.5	4	7.1	14	28.6	6.5	49	M6	2 700	1 350	AEL202W3
9/16	AELPF202-009W3	3 3/16	2 1/2	0.157	9/32	9/16	1.126	0.256	1 59/64	1/4	600	300	AEL202-009W3
5/8	AELPF202-010W3												AEL202-010W3
17	AELPF203W3	81	63.5	4	7.1	14	28.6	6.5	49	M6	2 700	1 350	AEL203W3
11/16	AELPF203-011W3	3 3/16	2 1/2	0.157	9/32	9/16	1.126	0.256	1 59/64	1/4	600	300	AEL203-011W3
20	AELPF204W3	90	71.5	4	9	16	31	7.5	56	M8	3 000	1 500	AEL204W3
3/4	AELPF204-012W3	3 17/32	2 13/16	0.157	23/64	5/8	1.220	0.295	2 13/64	5/16	660	330	AEL204-012W3
25	AELPF205W3	95	76	4	9	18	31	7.5	60	M8	4 000	2 000	AEL205W3
13/16	AELPF205-013W3												AEL205-013W3
7/8	AELPF205-014W3	3 3/4	2 63/64	0.157	23/64	23/32	1.220	0.295	2 23/64	5/16	880	440	AEL205-014W3
15/16	AELPF205-015W3												AEL205-015W3
1	AELPF205-100W3												AEL205-100W3
30	AELPF206W3	113	90.5	5.2	11	18	35.7	9	71	M10	5 000	2 500	AEL206W3
1 1/16	AELPF206-101W3												AEL206-101W3
1 1/8	AELPF206-102W3	4 7/16	3 9/16	0.205	7/16	23/32	1.406	0.354	2 51/64	3/8	1 100	550	AEL206-102W3
1 3/16	AELPF206-103W3												AEL206-103W3
1 1/4	AELPF206-104W3												AEL206-104W3
35	AELPF207W3	122	100	5.2	11	20	38.9	9.5	81	M10	6 000	3 000	AEL207W3
1 1/4	AELPF207-104W3												AEL207-104W3
1 5/16	AELPF207-105W3	4 13/16	3 15/16	0.205	7/16	25/32	1.531	0.374	3 3/16	3/8	1 300	650	AEL207-105W3
1 3/8	AELPF207-106W3												AEL207-106W3
1 7/16	AELPF207-107W3												AEL207-107W3
40	AELPF208W3	148	119	6.8	13.5	21	43.7	11	91	M12	7 000	3 500	AEL208W3
1 1/2	AELPF208-108W3	5 13/16	4 11/16	0.268	17/32	13/16	1.720	0.433	3 37/64	1/2	1 500	750	AEL208-108W3
1 9/16	AELPF208-109W3												AEL208-109W3

Remarks: 1) AELPF208 has four bolt holes.
2) The permissible load only applies in applications where the load is stable and the speed is 2400 min^{-1} or less.

Housing number	Mass of unit kg	lb
PF203	0.3	
PF203		0.7
PF203	0.3	
PF203		0.7
PF203		
PF203	0.3	
PF203		0.7
PF204	0.3	
PF204		0.7
PF205	0.4	
PF205		
PF205		0.9
PF205		
PF205		
PF206	0.6	
PF206		
PF206		1.3
PF206		
PF206		
PF207	0.8	
PF207		
PF207		1.8
PF207		
PF207		
PF208	1.4	
PF208		3.1
PF208		

Round flanged units pressed steel housing
Eccentric locking collar type

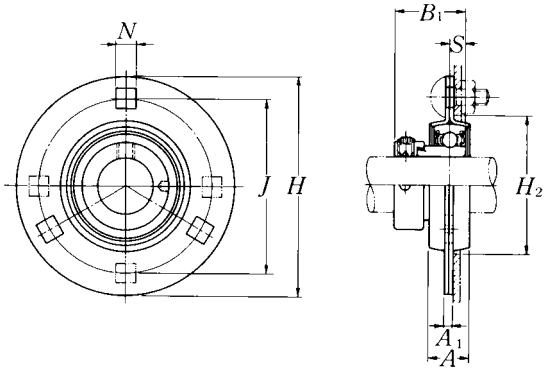

Shaft dia. mm / inch	Unit number	Nominal dimensions mm / inch: H	J	A1	N 1)	A	B1	S	H2 min.	Bolt size mm / inch	Max. load recommended N radial	lbf axial	Bearing number
12	JELPF201W3	81	63.5	4	7.1	14	28.6	6.5	49	M6	2 700	1 350	JEL201W3
1/2	JELPF201-008W3	3 3/16	2 1/2	0.157	9/32	9/16	1.126	0.256	1 59/64	1/4	600	300	JEL201-008W3
15	JELPF202W3	81	63.5	4	7.1	14	28.6	6.5	49	M6	2 700	1 350	JEL202W3
9/16	JELPF202-009W3	3 3/16	2 1/2	0.157	9/32	9/16	1.126	0.256	1 59/64	1/4	600	300	JEL202-009W3
5/8	JELPF202-010W3												JEL202-010W3
17	JELPF203W3	81	63.5	4	7.1	14	28.6	6.5	49	M6	2 700	1 350	JEL203W3
11/16	JELPF203-011W3	3 3/16	2 1/2	0.157	9/32	9/16	1.126	0.256	1 59/64	1/4	600	300	JEL203-011W3
20	JELPF204W3	90	71.5	4	9	16	31	7.5	56	M8	3 000	1 500	JEL204W3
3/4	JELPF204-012W3	3 17/32	2 13/16	0.157	23/64	5/8	1.220	0.295	2 13/64	5/16	660	330	JEL204-012W3
25	JELPF205W3	95	76	4	9	18	31	7.5	60	M8	4 000	2 000	JEL205W3
13/16	JELPF205-013W3												JEL205-013W3
7/8	JELPF205-014W3	3 3/4	2 63/64	0.157	23/64	23/32	1.220	0.295	2 23/64	5/16	800	440	JEL205-014W3
15/16	JELPF205-015W3												JEL205-015W3
1	JELPF205-100W3												JEL205-100W3
30	JELPF206W3	113	90.5	5.2	11	18	35.7	9	71	M10	5 000	2 500	JEL206W3
1 1/16	JELPF206-101W3												JEL206-101W3
1 1/8	JELPF206-102W3	4 7/16	3 9/16	0.205	7/16	23/32	1.406	0.354	2 51/64	3/8	1 100	550	JEL206-102W3
1 3/16	JELPF206-103W3												JEL206-103W3
1 1/4	JELPF206-104W3												JEL206-104W3
35	JELPF207W3	122	100	5.2	11	20	38.9	9.5	81	M10	6 000	3 000	JEL207W3
1 1/4	JELPF207-104W3												JEL207-104W3
1 5/16	JELPF207-105W3	4 13/16	3 15/16	0.205	7/16	25/32	1.531	0.374	3 3/16	3/8	1 300	650	JEL207-105W3
1 3/8	JELPF207-106W3												JEL207-106W3
1 7/16	JELPF207-107W3												JEL207-107W3
40	JELPF208W3	148	119	6.8	13.5	21	43.7	11	91	M12	7 000	3 500	JEL208W3
1 1/2	JELPF208-108W3	5 3/16	4 11/16	0.268	17/32	13/16	1.720	0.433	3 37/64	1/2	1 500	750	JEL208-108W3
1 9/16	JELPF208-109W3												JEL208-109W3

Remarks: 1) JELPF208 has four bolt holes.
2) The permissible load only applies in applications where the load is stable and the speed is 2400 min^{-1} or less.

Housing number	Mass of unit kg lb
PF203 PF203	0.3 0.7
PF203 PF203 PF203	0.2 0.4
PF203 PF203	0.2 0.4
PF204 PF204	0.3 0.7
PF205 PF205 PF205 PF205 PF205	0.4 0.9
PF206 PF206 PF206 PF206 PF206	0.6 1.3
PF207 PF207 PF207 PF207 PF207	0.8 1.8
PF208 PF208 PF208	1.4 3.1

Round flanged units pressed steel housing with rubber ring
Eccentric locking collar type

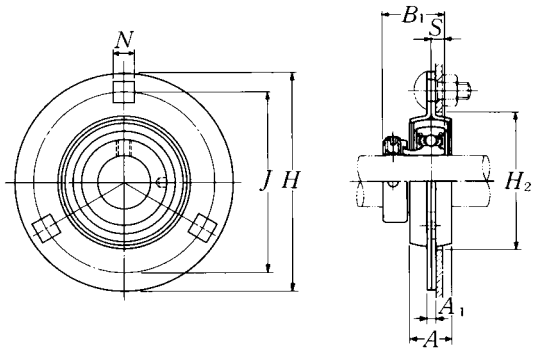

Shaft dia. mm / inch	Unit number	Nominal dimensions mm / inch: H	J	A1	N	A	B1	S	H2 min.	Bolt size mm / inch	Max. load recommended N radial	lbf axial	Bearing number
12	AELRPF201W3	90	71.5	4	9	16	28.6	6.5	56	M8	1 000	200	AEL201W3
1/2	AELRPF201-008W3	3 17/32	2 13/16	0.157	23/64	5/8	1.126	0.256	2 13/64	5/16	220	40	AEL201-008W3
15	AELRPF202W3	90	71.5	4	9	16	28.6	6.5	56	M8	1 000	200	AEL202W3
9/16	AELRPF202-009W3	3 17/32	2 13/16	0.157	23/64	5/8	1.126	0.256	2 13/64	5/16	220	40	AEL202-009W3
5/8	AELRPF202-010W3												AEL202-010W3
17	AELRPF203W3	90	71.5	4	9	16	28.6	6.5	56	M8	1 000	200	AEL203W3
11/16	AELRPF203-011W3	3 17/32	2 13/16	0.157	23/64	5/8	1.126	0.256	2 13/64	5/16	220	40	AEL203-011W3
20	AELRPF204W3	95	76	4	9	18	31	7.5	60	M8	1 150	200	AEL204W3
3/4	AELRPF204-012W3	3 3/4	2 63/64	0.157	23/64	23/32	1.220	0.295	2 23/64	5/16	250	40	AEL204-012W3
25	AELRPF205W3	113	90.5	5.2	11	18	31	7.5	71	M10	1 300	200	AEL205W3
13/16	AELRPF205-013W3												AEL205-013W3
7/8	AELRPF205-014W3	4 7/16	3 9/16	0.205	7/16	23/32	1.220	0.295	2 51/64	3/8	280	40	AEL205-014W3
15/16	AELRPF205-015W3												AEL205-015W3
1	AELRPF205-100W3												AEL205-100W3
30	AELRPF206W3	122	100	5.2	11	20	35.7	9	81	M10	1 500	200	AEL206W3
1 1/16	AELRPF206-101W3												AEL206-101W3
1 1/8	AELRPF206-102W3	4 13/16	3 15/16	0.205	7/16	25/32	1.406	0.354	3 3/16	3/8	330	40	AEL206-102W3
1 3/16	AELRPF206-103W3												AEL206-103W3
1 1/4	AELRPF206-104W3												AEL206-104W3

Housing number		Mass of unit
Rubber	Steel	kg lb
R201	PF204	0.3
R201	PF204	0.7
R201	PF204	0.3
R201	PF204	0.7
R201	PF204	
R201	PF204	0.3
R201	PF204	0.7
R204	PF205	0.4
R204	PF205	0.9
R205	PF206	0.5
R205	PF206	1.1
R205	PF206	
R205	PF206	
R205	PF206	
R206	PF207	0.7
R206	PF207	1.5
R206	PF207	
R206	PF207	
R206	PF207	

Rhombus flanged units pressed steel housing
Eccentric locking collar type

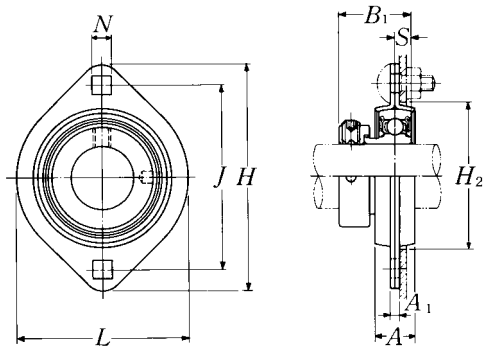

Shaft dia. mm / inch	Unit number	Nominal dimensions mm / inch: H	J	A1	N	A	L	B1	S	H2	Bolt size mm / inch	Max. load recommended N radial	lbf axial
12	AELPFL201W3	81	63.5	4	7.1	14	59	28.6	6.5	49	M 6	2 700	1 350
1/2	AELPFL201-008W3	3 3/16	2 1/2	0.157	9/32	9/16	2 5/16	1.126	0.256	1 59/64	1/4	600	300
15	AELPFL202W3	81	63.5	4	7.1	14	59	28.6	6.5	49	M 6	2 700	1 350
9/16	AELPFL202-009W3	3 3/16	2 1/2	0.157	9/32	9/16	2 5/16	1.126	0.256	1 59/64	1/4	600	300
5/8	AELPFL202-010W3												
17	AELPFL203W3	81	63.5	4	7.1	14	59	28.6	6.5	49	M 6	2 700	1 350
11/16	AELPFL203-011W3	3 3/16	2 1/2	0.157	9/32	9/16	2 5/16	1.126	0.256	1 59/64	1/4	600	300
20	AELPFL204W3	90	71.5	4	9	16	67	31	7.5	56	M 8	3 000	1 500
3/4	AELPFL204-012W3	3 17/32	2 13/16	0.157	23/64	5/8	2 5/8	1.220	0.295	2 13/64	5/16	660	330
25	AELPFL205W3	95	76	4	9	18	71	31	7.5	60	M 8	4 000	2 000
13/16	AELPFL205-013W3												
7/8	AELPFL205-014W3	3 3/4	2 63/64	0.157	23/64	23/32	2 25/32	1.220	0.295	2 23/64	5/16	880	440
15/16	AELPFL205-015W3												
1	AELPFL205-100W3												
30	AELPFL206W3	113	90.5	5.2	11	18	84	35.7	9	71	M10	5 000	2 500
1 1/16	AELPFL206-101W3												
1 1/8	AELPFL206-102W3	4 7/16	3 9/16	0.205	7/16	23/32	3 5/16	1.406	0.354	2 51/64	3/8	1 100	550
1 3/16	AELPFL206-103W3												
1 1/4	AELPFL206-104W3												
35	AELPFL207W3	122	100	5.2	11	20	94	38.9	9.5	81	M10	6 000	3 000
1 1/4	AELPFL207-104W3												
1 5/16	AELPFL207-105W3	4 13/16	3 15/16	0.205	7/16	25/32	3 11/16	1.531	0.374	3 3/16	3/8	1 300	650
1 3/8	AELPFL207-106W3												
1 7/16	AELPFL207-107W3												
40	AELPFL208W3	148	119	6.8	13.5	21	100	43.7	11	91	M12	6 000	3 000
1 1/2	AELPFL208-108W3	5 13/16	4 11/16	0.268	17/32	13/16	3 15/16	1.720	0.433	3 37/64	1/2	1 300	650
1 9/16	AELPFL208-109W3												

Remarks: 1) The permissible load only applies in applications where the load is stable and the speed is 2400 min^{-1} or less.

Bearing number	Housing number	Mass of unit kg lb
AEL201W3	PFL203	0.3
AEL201-008W3	PFL203	0.7
AEL202W3	PFL203	0.3
AEL202-009W3	PFL203	0.7
AEL202-010W3	PFL203	
AEL203W3	PFL203	0.3
AEL203-011W3	PFL203	0.7
AEL204W3	PFL204	0.3
AEL204-012W3	PFL204	0.7
AEL205W3	PFL205	0.4
AEL205-013W3	PFL205	0.9
AEL205-014W3	PFL205	
AEL205-015W3	PFL205	
AEL205-100W3	PFL205	
AEL206W3	PFL206	0.6
AEL206-101W3	PFL206	1.3
AEL206-102W3	PFL206	
AEL206-103W3	PFL206	
AEL206-104W3	PFL206	
AEL207W3	PFL207	0.9
AEL207-104W3	PFL207	2.0
AEL207-105W3	PFL207	
AEL207-106W3	PFL207	
AEL207-107W3	PFL207	
AEL208W3	PFL208	1.3
AEL208-108W3	PFL208	2.9
AEL208-109W3	PFL208	

Rhombus flanged units pressed steel housing
Eccentric locking collar type

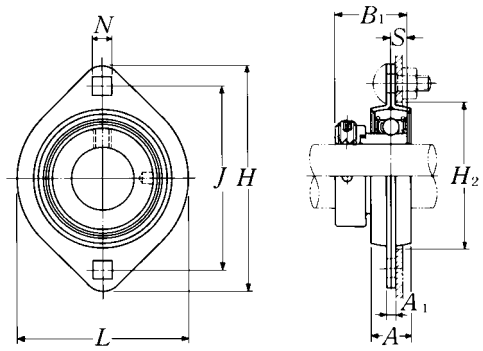

Shaft dia. mm / inch	Unit number	Nominal dimensions mm / inch: H	J	A1	N	A	L	B1	S	H2	Bolt size mm / inch	Max. load recommended N radial	lbf axial
12	JELPFL201W3	81	63	4	7.1	14	59	28.6	6.5	49	M 6	2 700	1 350
1/2	JELPFL201-008W3	3 3/16	2 31/64	0.157	9/32	9/16	2 5/16	1.126	0.256	1 59/64	1/4	600	300
15	JELPFL202W3	81	63	4	7.1	14	59	28.6	6.5	49	M 6	2 700	1 350
9/16	JELPFL202-009W3	3 3/16	2 31/64	0.157	9/32	9/16	2 5/16	1.126	0.256	1 59/64	1/4	600	300
5/8	JELPFL202-010W3												
17	JELPFL203W3	81	63	4	7.1	14	59	28.6	6.5	49	M 6	2 700	1 350
11/16	JELPFL203-011W3	3 3/16	2 31/64	0.157	9/32	9/16	2 5/16	1.126	0.256	1 59/64	1/4	600	300
20	JELPFL204W3	90	71	4	9	16	67	31	7.5	56	M 8	3 000	1 500
3/4	JELPFL204-012W3	3 17/32	2 51/64	0.157	23/64	5/8	2 5/8	1.220	0.295	2 13/64	5/16	660	330
25	JELPFL205W3	95	76	4	9	18	71	31	7.5	60	M 8	4 000	2 000
13/16	JELPFL205-013W3												
7/8	JELPFL205-014W3	3 3/4	2 63/64	0.157	23/64	23/32	2 25/32	1.220	0.295	2 23/64	5/16	880	440
15/16	JELPFL205-015W3												
1	JELPFL205-100W3												
30	JELPFL206W3	113	90	5.2	11	18	84	35.7	9	71	M10	5 000	2 500
1 1/16	JELPFL206-101W3												
1 1/8	JELPFL206-102W3	4 7/16	3 35/64	0.205	7/16	23/32	3 5/16	1.406	0.354	2 51/64	3/8	1 100	550
1 3/16	JELPFL206-103W3												
1 1/4	JELPFL206-104W3												
35	JELPFL207W3	122	100	5.2	11	20	94	38.9	9.5	81	M10	6 000	3 000
1 1/4	JELPFL207-104W3												
1 5/16	JELPFL207-105W3	4 13/16	3 15/16	0.205	7/16	25/32	3 11/16	1.531	0.374	3 3/16	3/8	1 300	650
1 3/8	JELPFL207-106W3												
1 7/16	JELPFL207-107W3												
40	JELPFL208W3	148	119	6.8	13.5	21	100	43.7	11	91	M12	6 000	3 000
1 1/2	JELPFL208-108W3	5 13/16	4 11/16	0.268	17/32	13/16	3 15/16	1.720	0.433	3 37/64	1/2	1 300	650
1 9/16	JELPFL208-109W3												

Remarks: 1) The permissible load only applies in applications where the load is stable and the speed is 2400 min^{-1} or less.

Bearing number	Housing number	Mass of unit kg lb
JEL201W3	PFL203	0.3
JEL201-008W3	PFL203	0.7
JEL202W3	PFL203	0.3
JEL202-009W3	PFL203	0.7
JEL202-010W3	PFL203	
JEL203W3	PFL203	0.3
JEL203-011W3	PFL203	0.7
JEL204W3	PFL204	0.3
JEL204-012W3	PFL204	0.7
JEL205W3	PFL205	0.4
JEL205-013W3	PFL205	0.9
JEL205-014W3	PFL205	
JEL205-015W3	PFL205	
JEL205-100W3	PFL205	
JEL206W3	PFL206	0.7
JEL206-101W3	PFL206	1.5
JEL206-102W3	PFL206	
JEL206-103W3	PFL206	
JEL206-104W3	PFL206	
JEL207W3	PFL207	0.9
JEL207-104W3	PFL207	2.0
JEL207-105W3	PFL207	
JEL207-106W3	PFL207	
JEL207-107W3	PFL207	
JEL208W3	PFL208	1.3
JEL208-108W3	PFL208	2.9
JEL208-109W3	PFL208	

Take-up units cast housing
Eccentric locking collar type

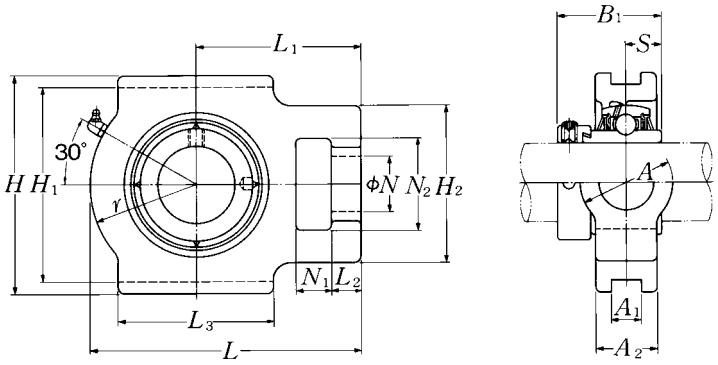

Shaft dia. mm / inch	Unit number [1]	Nominal dimensions (mm / inch) N_1	L_2	H_2	N_2	N	L_3	A_1	H_1	H	L	A_2	A	r	L_1	B_1	S
20	UELT204D1W3	16	12	51	32	19	51	12	76	89	94	21	32	33	61	43.7	17.1
3/4	UELT204-012D1W3	5/8	15/32	2	1 1/4	3/4	2	0.472	2 63/64	3 1/2	3 11/16	13/16	1 1/4	1 5/16	2 13/32	1.720	0.673
25	UELT205D1W3	16	12	51	32	19	51	12	76	89	97	24	32	35	62	44.4	17.45
13/16	UELT205-013D1W3																
7/8	UELT205-014D1W3	5/8	15/32	2	1 1/4	3/4	2	0.472	2 63/64	3 1/2	3 13/16	15/16	1 1/4	1 3/8	2 7/16	1.748	0.687
15/16	UELT205-015D1W3																
1	UELT205-100D1W3																
30	UELT206D1W3	16	12	56	37	22	57	12	89	102	113	28	37	43	70	48.4	18.25
1 1/16	UELT206-101D1W3																
1 1/8	UELT206-102D1W3	5/8	15/32	2 7/32	1 15/32	7/8	2 1/4	0.472	3 1/2	4 1/32	4 7/16	1 3/32	1 15/32	1 11/16	2 3/4	1.906	0.719
1 3/16	UELT206-103D1W3																
1 1/4	UELT206-104D1W3																
35	UELT207D1W3	16	15	64	37	22	64	12	89	102	129	30	37	51	78	51.1	18.8
1 1/4	UELT207-104D1W3																
1 5/16	UELT207-105D1W3	5/8	19/32	2 17/32	1 15/32	7/8	2 17/32	0.472	3 1/2	4 1/32	5 3/32	1 3/16	1 15/32	2	3 1/16	2.012	0.740
1 3/8	UELT207-106D1W3																
1 7/16	UELT207-107D1W3																
40	UELT208D1W3	19	18	83	49	29	83	16	102	114	144	33	49	56	88	56.3	21.4
1 1/2	UELT208-108D1W3	3/4	23/32	3 9/32	1 15/16	1 5/32	3 9/32	0.630	4 1/64	4 1/2	5 21/32	1 5/16	1 15/16	2 7/32	3 15/32	2.217	0.843
1 9/16	UELT208-109D1W3																
45	UELT209D1W3	19	18	83	49	29	83	16	102	117	145	35	49	57	88	56.3	21.4
1 5/8	UELT209-110D1W3																
1 11/16	UELT209-111D1W3	3/4	23/32	3 9/32	1 15/16	1 5/32	3 9/32	0.630	4 1/64	4 19/32	5 23/32	1 3/8	1 15/16	2 1/4	3 15/32	2.217	0.843
1 3/4	UELT209-112D1W3																
50	UELT210D1W3	19	18	83	49	29	86	16	102	117	151	37	49	59	92	62.7	24.6
1 13/16	UELT210-113D1W3																
1 7/8	UELT210-114D1W3	3/4	23/32	3 9/32	1 15/16	1 5/32	3 3/8	0.630	4 1/64	4 19/32	5 15/16	1 15/32	1 15/16	2 5/16	3 5/8	2.469	0.969
1 15/16	UELT210-115D1W3																
2	UELT210-200D1W3																

Remarks: 1) These numbers indicate relubricatable type. If maintenance free type is needed, please order without suffix "D1".
Note: Please refer to page 36 for size of grease fitting.

Bearing number	Housing [1)] number	Mass of unit kg	lb
UEL204D1W3	T204D1	0.6	
UEL204-012D1W3	T204D1	1.3	
UEL205D1W3	T205D1	0.9	
UEL205-013D1W3	T205D1	2.0	
UEL205-014D1W3	T205D1		
UEL205-015D1W3	T205D1		
UEL205-100D1W3	T205D1		
UEL206D1W3	T206D1	1.4	
UEL206-101D1W3	T206D1	3.1	
UEL206-102D1W3	T206D1		
UEL206-103D1W3	T206D1		
UEL206-104D1W3	T206D1		
UEL207D1W3	T207D1	1.7	
UEL207-104D1W3	T207D1	3.8	
UEL207-105D1W3	T207D1		
UEL207-106D1W3	T207D1		
UEL207-107D1W3	T207D1		
UEL208D1W3	T208D1	2.5	
UEL208-108D1W3	T208D1	5.5	
UEL208-109D1W3	T208D1		
UEL209D1W3	T209D1	2.5	
UEL209-110D1W3	T209D1	5.5	
UEL209-111D1W3	T209D1		
UEL209-112D1W3	T209D1		
UEL210D1W3	T210D1	2.7	
UEL210-113D1W3	T210D1	6.0	
UEL210-114D1W3	T210D1		
UEL210-115D1W3	T210D1		
UEL210-200D1W3	T210D1		

Take-up units cast housing
Eccentric locking collar type

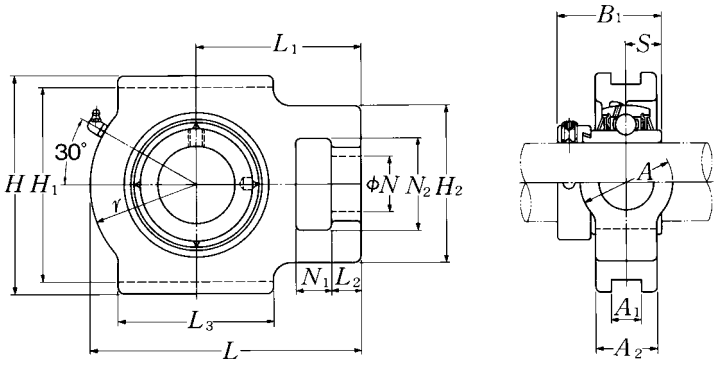

Shaft dia. mm / inch	Unit number [1]	Nominal dimensions mm / inch															
		N_1	L_2	H_2	N_2	N	L_3	A_1	H_1	H	L	A_2	A	r	L_1	B_1	S
55	UELT211D1W3	25	21	102	64	35	95	22	130	146	171	38	64	65	106	71.4	27.75
2	UELT211-200D1W3																
2 1/16	UELT211-201D1W3	31/32	13/16	4 1/32	2 17/32	1 3/8	3 3/4	0.866	5 1/8	5 3/4	6 23/32	1 1/2	2 17/32	2 9/16	4 3/16	2.811	1.093
2 1/8	UELT211-202D1W3																
2 3/16	UELT211-203D1W3																
60	UELT212D1W3	32	21	102	64	35	102	22	130	146	194	42	64	75	119	77.8	30.95
2 1/4	UELT212-204D1W3																
2 5/16	UELT212-205D1W3	1 1/4	13/16	4 1/32	2 17/32	1 3/8	4 1/32	0.866	5 1/8	5 3/4	7 5/8	1 21/32	2 17/32	2 15/16	4 11/16	3.063	1.219
2 3/8	UELT212-206D1W3																
2 7/16	UELT212-207D1W3																
65	UELT213D1W3	32	23	111	70	41	121	26	151	167	224	44	70	87	137	85.7	34.15
2 1/2	UELT213-208D1W3	1 1/4	29/32	4 3/8	2 3/4	1 5/8	4 3/4	1.024	5 15/16	6 9/16	8 13/16	1 23/32	2 3/4	3 7/16	5 13/32	3.374	1.344
2 9/16	UELT213-209D1W3																
70	UELT214D1W3	32	23	111	70	41	121	26	151	167	224	46	70	87	137	85.7	34.15
2 5/8	UELT214-210D1W3																
2 11/16	UELT214-211D1W3	1 1/4	29/32	4 3/8	2 3/4	1 5/8	4 3/4	1.024	5 15/16	6 9/16	8 13/16	1 13/16	2 3/4	3 7/16	5 13/32	3.374	1.344
2 3/4	UELT214-212D1W3																
75	UELT215D1W3	32	23	111	70	41	121	26	151	167	232	48	70	92	140	92	37.3
2 13/16	UELT215-213D1W3																
2 7/8	UELT215-214D1W3	1 1/4	29/32	4 3/8	2 3/4	1 5/8	4 3/4	1.024	5 15/16	6 9/16	9 1/8	1 7/8	2 3/4	3 5/8	5 1/2	3.622	1.469
2 15/16	UELT215-215D1W3																
3	UELT215-300D1W3																

Remarks: 1) These numbers indicate relubricatable type. If maintenance free type is needed, please order without suffix "D1".
Note: Please refer to page 36 for size of grease fitting.

Bearing number	Housing [1)] number	Mass of unit kg	lb
UEL211D1W3	T211D1	4.2	
UEL211-200D1W3	T211D1		
UEL211-201D1W3	T211D1	9.3	
UEL211-202D1W3	T211D1		
UEL211-203D1W3	T211D1		
UEL212D1W3	T212D1	5.2	
UEL212-204D1W3	T212D1		
UEL212-205D1W3	T212D1	11	
UEL212-206D1W3	T212D1		
UEL212-207D1W3	T212D1		
UEL213D1W3	T213D1	7.7	
UEL213-208D1W3	T213D1	17	
UEL213-209D1W3	T213D1		
UEL214D1W3	T214D1	7.3	
UEL214-210D1W3	T214D1		
UEL214-211D1W3	T214D1	16	
UEL214-212D1W3	T214D1		
UEL215D1W3	T215D1	7.8	
UEL215-213D1W3	T215D1		
UEL215-214D1W3	T215D1	17	
UEL215-215D1W3	T215D1		
UEL215-300D1W3	T215D1		

Take-up units cast housing
Eccentric locking collar type

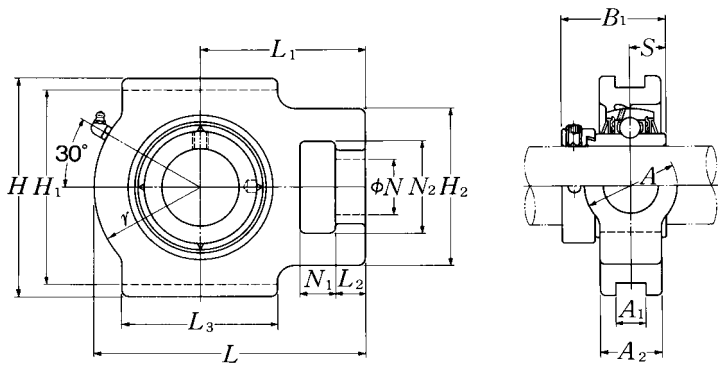

Shaft dia. mm / inch	Unit number [1]	Nominal dimensions (mm / inch) N_1	L_2	H_2	N_2	N	L_3	A_1	H_1	H	L	A_2	A	r	L_1	B_1	S
25	UELT305D1W3	16	14	62	36	26	65	12	80	89	122	26	36	46	76	46.8	16.7
13/16	UELT305-013D1W3																
7/8	UELT305-014D1W3	5/8	9/16	2 7/16	1 13/32	1 1/32	2 9/16	0.472	3 5/32	3 1/2	4 13/16	1 1/32	1 13/32	1 13/16	3	1.843	0.657
15/16	UELT305-015D1W3																
1	UELT305-100D1W3																
30	UELT306D1W3	18	16	70	41	28	74	16	90	100	137	28	41	52	85	50	17.5
1 1/16	UELT306-101D1W3																
1 1/8	UELT306-102D1W3	23/32	5/8	2 3/4	1 5/8	1 3/32	2 29/32	0.630	3 35/64	3 15/16	5 13/32	1 3/32	1 5/8	2 1/16	3 11/32	1.969	0.689
1 3/16	UELT306-103D1W3																
35	UELT307D1W3	20	17	75	45	30	80	16	100	111	150	32	45	56	94	51.6	18.3
1 1/4	UELT307-104D1W3																
1 5/16	UELT307-105D1W3	25/32	21/32	2 15/16	1 25/32	1 3/16	3 5/32	0.630	3 15/16	4 3/8	5 29/32	1 1/4	1 25/32	2 7/32	3 11/16	2.031	0.720
1 3/8	UELT307-106D1W3																
1 7/16	UELT307-107D1W3																
40	UELT308D1W3	22	19	83	50	32	89	18	112	124	162	34	50	62	100	57.1	19.8
1 1/2	UELT308-108D1W3	7/8	3/4	3 9/32	1 31/32	1 1/4	3 1/2	0.709	4 13/32	4 7/8	6 3/8	1 11/32	1 31/32	2 7/16	3 15/16	2.248	0.780
1 9/16	UELT308-109D1W3																
45	UELT309D1W3	24	20	90	55	34	97	18	125	138	178	38	55	68	110	58.7	19.8
1 5/8	UELT309-110D1W3																
1 11/16	UELT309-111D1W3	15/16	25/32	3 17/32	2 5/32	1 11/32	3 13/16	0.709	4 59/64	5 7/16	7	1 1/2	2 5/32	2 11/16	4 11/32	2.311	0.780
1 3/4	UELT309-112D1W3																
50	UELT310D1W3	27	22	98	61	37	106	20	140	151	192	40	61	74	118	66.6	24.6
1 13/16	UELT310-113D1W3																
1 7/8	UELT310-114D1W3	1 1/16	7/8	3 27/32	2 13/32	1 15/32	4 3/16	0.787	5 33/64	5 15/16	7 9/16	1 9/16	2 13/32	2 29/32	4 21/32	2.622	0.969
1 15/16	UELT310-115D1W3																
55	UELT311D1W3	29	23	105	66	39	115	22	150	163	207	44	66	80	127	73	27.8
2	UELT311-200D1W3																
2 1/16	UELT311-201D1W3	1 5/32	29/32	4 1/8	2 19/32	1 17/32	4 17/32	0.866	5 29/32	6 13/32	8 5/32	1 23/32	2 19/32	3 5/32	5	2.874	1.094
2 1/8	UELT311-202D1W3																
2 3/16	UELT311-203D1W3																

Remarks: 1) These numbers indicate relubricatable type. If maintenance free type is needed, please order without suffix "D1".
Note: Please refer to page 36 for size of grease fitting.

Bearing number	Housing [1)] number	Mass of unit kg	lb
UEL305D1W3	T305D1	1.4	
UEL305-013D1W3	T305D1		
UEL305-014D1W3	T305D1	3.1	
UEL305-015D1W3	T305D1		
UEL305-100D1W3	T305D1		
UEL306D1W3	T306D1	1.9	
UEL306-101D1W3	T306D1		
UEL306-102D1W3	T306D1	4.2	
UEL306-103D1W3	T306D1		
UEL307D1W3	T307D1	2.4	
UEL307-104D1W3	T307D1		
UEL307-105D1W3	T307D1	5.3	
UEL307-106D1W3	T307D1		
UEL307-107D1W3	T307D1		
UEL308D1W3	T308D1	3.1	
UEL308-108D1W3	T308D1	6.8	
UEL308-109D1W3	T308D1		
UEL309D1W3	T309D1	4.1	
UEL309-110D1W3	T309D1		
UEL309-111D1W3	T309D1	9.0	
UEL309-112D1W3	T309D1		
UEL310D1W3	T310D1	5.2	
UEL310-113D1W3	T310D1		
UEL310-114D1W3	T310D1	11	
UEL310-115D1W3	T310D1		
UEL311D1W3	T311D1	6.6	
UEL311-200D1W3	T311D1		
UEL311-201D1W3	T311D1	15	
UEL311-202D1W3	T311D1		
UEL311-203D1W3	T311D1		

Take-up units cast housing
Eccentric locking collar type

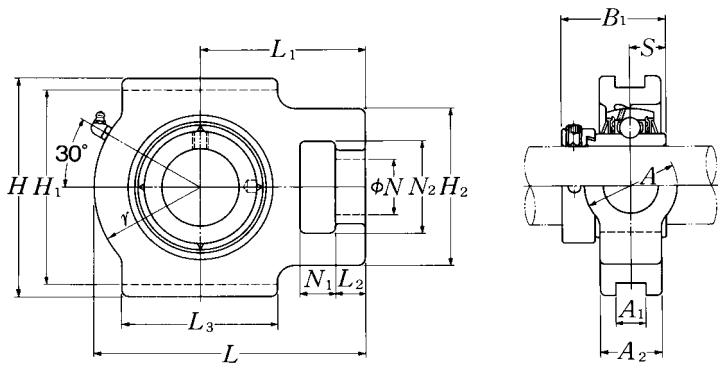

Shaft dia. mm / inch	Unit number [1]	Nominal dimensions															
		mm															
		N_1	L_2	H_2	N_2	N	L_3	A_1	H_1	H	L	A_2	A	r	L_1	B_1	S
		inch															
60	UELT312D1W3	31	25	113	71	41	123	22	160	178	220	46	71	85	135	79.4	30.95
2 1/4	UELT312-204D1W3																
2 5/16	UELT312-205D1W3	1 7/32	31/32	4 7/16	2 25/32	1 5/8	4 27/32	0.866	6 19/64	7	8 21/32	1 13/16	2 25/32	3 11/32	5 5/16	3.126	1.219
2 3/8	UELT312-206D1W3																
2 7/16	UELT312-207D1W3																
65	UELT313D1W3	32	27	116	70	43	134	26	170	190	238	50	80	92	146	85.7	32.55
2 1/2	UELT313-208D1W3	1 1/4	1 1/16	4 9/16	2 3/4	1 11/16	5 9/32	1.024	6 11/16	7 15/32	9 3/8	1 31/32	3 5/32	3 5/8	5 3/4	3.374	1.281
2 9/16	UELT313-209D1W3																
70	UELT314D1W3	36	27	130	85	46	140	26	180	202	252	52	90	97	155	92.1	34.15
2 5/8	UELT314-210D1W3																
2 11/16	UELT314-211D1W3	1 13/32	1 1/16	5 1/8	3 11/32	1 13/16	5 1/2	1.024	7 3/32	7 15/16	9 29/32	2 1/16	3 17/32	3 13/16	6 3/32	3.626	1.344
2 3/4	UELT314-212D1W3																
75	UELT315D1W3	36	27	132	85	46	150	26	192	216	262	55	90	102	160	100	37.3
2 13/16	UELT315-213D1W3																
2 7/8	UELT315-214D1W3	1 13/32	1 1/16	5 3/16	3 11/32	1 13/16	5 29/32	1.024	7 9/16	8 1/2	10 5/16	2 5/32	3 17/32	4 1/32	6 5/16	3.937	1.469
2 15/16	UELT315-215D1W3																
3	UELT315-300D1W3																
80	UELT316D1W3	42	30	150	98	53	160	30	204	230	282	60	102	108	174	106.4	40.5
3 1/16	UELT316-301D1W3																
3 1/8	UELT316-302D1W3	1 21/32	1 3/16	5 29/32	3 27/32	2 3/32	6 5/16	1.181	8 1/32	9 1/16	11 3/32	2 3/8	4 1/32	4 1/4	6 27/32	4.189	1.594
3 3/16	UELT316-303D1W3																
85	UELT317D1W3	42	32	152	98	53	170	32	214	240	298	64	102	115	183	109.5	42.05
3 1/4	UELT317-304D1W3																
3 5/16	UELT317-305D1W3	1 21/32	1 1/4	5 31/32	3 27/32	2 3/32	6 11/16	1.260	8 27/64	9 7/16	11 23/32	2 17/32	4 1/32	4 17/32	7 7/32	4.311	1.656
3 7/16	UELT317-307D1W3																
90	UELT318D1W3	46	32	160	106	57	175	32	228	255	312	66	110	120	192	115.9	43.65
3 7/16	UELT318-307D1W3	1 13/16	1 1/4	6 5/16	4 3/16	2 1/4	6 7/8	1.260	8 31/32	10 1/32	12 9/32	2 19/32	4 11/32	4 23/32	7 9/16	4.563	1.719
3 1/2	UELT318-308D1W3																

Remarks: 1) These numbers indicate relubricatable type. If maintenance free type is needed, please order without suffix "D1".
Note: Please refer to page 36 for size of grease fitting.

Bearing number	Housing [1)] number	Mass of unit kg	lb
UEL312D1W3	T312D1	7.9	
UEL312-204D1W3	T312D1		
UEL312-205D1W3	T312D1	17	
UEL312-206D1W3	T312D1		
UEL312-207D1W3	T312D1		
UEL313D1W3	T313D1	9.8	
UEL313-208D1W3	T313D1	22	
UEL313-209D1W3	T313D1		
UEL314D1W3	T314D1	11	
UEL314-210D1W3	T314D1		
UEL314-211D1W3	T314D1	24	
UEL314-212D1W3	T314D1		
UEL315D1W3	T315D1	14	
UEL315-213D1W3	T315D1		
UEL315-214D1W3	T315D1	31	
UEL315-215D1W3	T315D1		
UEL315-300D1W3	T315D1		
UEL316D1W3	T316D1	17	
UEL316-301D1W3	T316D1		
UEL316-302D1W3	T316D1	37	
UEL316-303D1W3	T316D1		
UEL317D1W3	T317D1	20	
UEL317-304D1W3	T317D1		
UEL317-305D1W3	T317D1	44	
UEL317-307D1W3	T317D1		
UEL318D1W3	T318D1	23	
UEL318-307D1W3	T318D1	51	
UEL318-308D1W3	T318D1		

Take-up units cast housing
Eccentric locking collar type

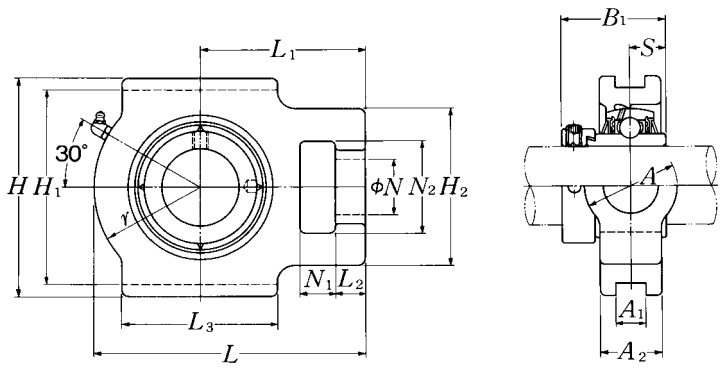

Shaft dia. mm / inch	Unit number [1]	Nominal dimensions															
		mm								inch							
		N_1	L_2	H_2	N_2	N	L_3	A_1	H_1	H	L	A_2	A	r	L_1	B_1	S
95	UELT319D1W3	46	33	165	106	57	180	35	240	270	322	72	110	125	197	122.3	38.9
3 5/8	UELT319-310D1W3																
3 11/16	UELT319-311D1W3	1 13/16	1 5/16	6 1/2	4 3/16	2 1/4	7 3/32	1.378	9 29/64	10 5/8	12 11/16	2 27/32	4 11/32	4 29/32	7 3/4	4.815	1.531
3 3/4	UELT319-312D1W3																
100	UELT320D1W3	48	34	175	115	59	200	35	260	290	345	75	120	135	210	128.6	50
3 13/16	UELT320-313D1W3																
3 7/8	UELT320-314D1W3	1 7/8	1 11/32	6 7/8	4 17/32	2 5/16	7 7/8	1.378	10 15/64	11 13/32	13 19/32	2 15/16	4 23/32	5 5/16	8 9/32	5.063	1.969
3 15/16	UELT320-315D1W3																
4	UELT320-400D1W3																
105	UELT321D1W3	48	34	175	115	59	200	35	260	290	347	75	120	135	212	139.7	48.4
110	UELT322D1W3	52	40	185	125	65	215	38	285	320	385	80	130	150	235	141.3	49.2

Remarks: 1) These numbers indicate relubricatable type. If maintenance free type is needed, please order without suffix "D1".
Note: Please refer to page 36 for size of grease fitting.

Bearing number	Housing [1)] number	Mass of unit kg	lb
UEL319D1W3	T319D1	26	
UEL319-310D1W3	T319D1		
UEL319-311D1W3	T319D1	57	
UEL319-312D1W3	T319D1		
UEL320D1W3	T320D1	32	
UEL320-313D1W3	T320D1		
UEL320-314D1W3	T320D1	71	
UEL320-315D1W3	T320D1		
UEL320-400D1W3	T320D1		
UEL321D1D1W3	T321D1	33	
UEL322D1D1W3	T322D1	42	

Cartridge units cast housing
Eccentric locking collar type

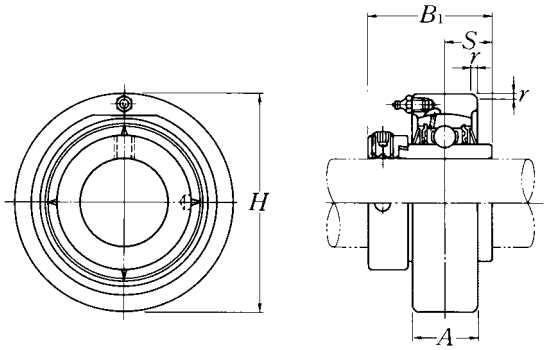

Shaft dia. mm / inch	Unit number 1)	Nominal dimensions mm / inch H	A	r	B1	S	Bearing number	Housing 1) number	Mass of unit kg / lb
20	UELC204D1W3	72	20	2	43.7	17.1	UEL204D1W3	C204D1	0.6
3/4	UELC204-012D1W3	2.8346	25/32	0.079	1.720	0.673	UEL204-012D1W3	C204D1	1.3
25	UELC205D1W3	80	22	2	44.4	17.45	UEL205D1W3	C205D1	0.7
13/16	UELC205-013D1W3						UEL205-013D1W3	C205D1	
7/8	UELC205-014D1W3	3.1496	55/64	0.079	1.748	0.687	UEL205-014D1W3	C205D1	1.5
15/16	UELC205-015D1W3						UEL205-015D1W3	C205D1	
1	UELC205-100D1W3						UEL205-100D1W3	C205D1	
30	UELC206D1W3	85	27	2	48.4	18.25	UEL206D1W3	C206D1	0.9
1 1/16	UELC206-101D1W3						UEL206-101D1W3	C206D1	
1 1/8	UELC206-102D1W3	3.3465	1 1/16	0.079	1.906	0.719	UEL206-102D1W3	C206D1	2.0
1 3/16	UELC206-103D1W3						UEL206-103D1W3	C206D1	
1 1/4	UELC206-104D1W3						UEL206-104D1W3	C206D1	
35	UELC207D1W3	90	28	2	51.1	18.8	UEL207D1W3	C207D1	1.0
1 1/4	UELC207-104D1W3						UEL207-104D1W3	C207D1	
1 5/16	UELC207-105D1W3	3.5433	1 7/64	0.079	2.012	0.740	UEL207-105D1W3	C207D1	2.2
1 3/8	UELC207-106D1W3						UEL207-106D1W3	C207D1	
1 7/16	UELC207-107D1W3						UEL207-107D1W3	C207D1	
40	UELC208D1W3	100	30	2.5	56.3	21.4	UEL208D1W3	C208D1	1.4
1 1/2	UELC208-108D1W3	3.9370	1 3/16	0.098	2.217	0.843	UEL208-108D1W3	C208D1	3.1
1 9/16	UELC208-109D1W3						UEL208-109D1W3	C208D1	
45	UELC209D1W3	110	31	2.5	56.3	21.4	UEL209D1W3	C209D1	1.6
1 5/8	UELC209-110D1W3						UEL209-110D1W3	C209D1	
1 11/16	UELC209-111D1W3	4.3307	1 7/32	0.098	2.217	0.843	UEL209-111D1W3	C209D1	3.5
1 3/4	UELC209-112D1W3						UEL209-112D1W3	C209D1	
50	UELC210D1W3	120	33	2.5	62.7	24.6	UEL210D1W3	C210D1	2.1
1 13/16	UELC210-113D1W3						UEL210-113D1W3	C210D1	
1 7/8	UELC210-114D1W3	4.7244	1 19/64	0.098	2.469	0.969	UEL210-114D1W3	C210D1	4.6
1 15/16	UELC210-115D1W3						UEL210-115D1W3	C210D1	
2	UELC210-200D1W3						UEL210-200D1W3	C210D1	

Remarks: 1) These numbers indicate relubricatable type. If maintenance free type is needed, please order without suffix "D1".
Note: Please refer to page 36 for size of grease fitting.

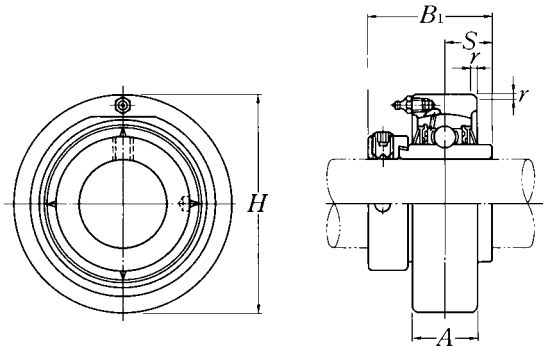

Shaft dia. mm inch	Unit number 1)	Nominal dimensions mm inch H	A	r	B1	S	Bearing number	Housing 1) number	Mass of unit kg lb
55	UELC211D1W3	125	35	2.5	71.4	27.75	UEL211D1W3	C211D1	2.4
2	UELC211-200D1W3						UEL211-200D1W3	C211D1	
2 1/16	UELC211-201D1W3	4.9213	1 3/8	0.098	2.811	1.093	UEL211-201D1W3	C211D1	5.3
2 1/8	UELC211-202D1W3						UEL211-202D1W3	C211D1	
2 3/16	UELC211-203D1W3						UEL211-203D1W3	C211D1	
60	UELC212D1W3	130	38	2.5	77.8	30.95	UEL212D1W3	C212D1	2.8
2 1/4	UELC212-204D1W3						UEL212-204D1W3	C212D1	
2 5/16	UELC212-205D1W3	5.1181	1 1/2	0.098	3.063	1.219	UEL212-205D1W3	C212D1	6.2
2 3/8	UELC212-206D1W3						UEL212-206D1W3	C212D1	
2 7/16	UELC212-207D1W3						UEL212-207D1W3	C212D1	

Remarks: 1) These numbers indicate relubricatable type. If maintenance free type is needed, please order without suffix "D1".
Note: Please refer to page 36 for size of grease fitting.

Cartridge units cast housing
Eccentric locking collar type

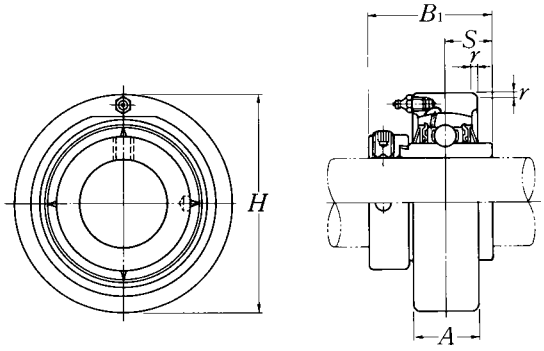

Shaft dia. mm / inch	Unit number 1)	Nominal dimensions mm / inch H	A	r	B1	S	Bearing number	Housing 1) number	Mass of unit kg / lb
25	UELC305D1W3	90	26	2.5	46.8	16.7	UEL305D1W3	C305D1	1.0
13/16	UELC305-013D1W3						UEL305-013D1W3	C305D1	
7/8	UELC305-014D1W3	3.5433	1 1/32	0.098	1.843	0.657	UEL305-014D1W3	C305D1	2.4
15/16	UELC305-015D1W3						UEL305-015D1W3	C305D1	
1	UELC305-100D1W3						UEL305-100D1W3	C305D1	
30	UELC306D1W3	100	28	2.5	50	17.5	UEL306D1W3	C306D1	1.4
1 1/16	UELC306-101D1W3						UEL306-101D1W3	C306D1	
1 1/8	UELC306-102D1W3	3.9370	1 7/64	0.098	1.969	0.689	UEL306-102D1W3	C306D1	3.3
1 3/16	UELC306-103D1W3						UEL306-103D1W3	C306D1	
35	UELC307D1W3	110	32	3	51.6	18.3	UEL307D1W3	C307D1	1.8
1 1/4	UELC307-104D1W3						UEL307-104D1W3	C307D1	
1 5/16	UELC307-105D1W3	4.3307	1 17/64	0.118	2.031	0.720	UEL307-105D1W3	C307D1	4.0
1 3/8	UELC307-106D1W3						UEL307-106D1W3	C307D1	
1 7/16	UELC307-107D1W3						UEL307-107D1W3	C307D1	
40	UELC308D1W3	120	34	3	57.1	19.8	UEL308D1W3	C308D1	2.3
1 1/2	UELC308-108D1W3	4.7244	1 11/32	0.118	2.248	0.780	UEL308-108D1W3	C308D1	5.1
1 9/16	UELC308-109D1W3						UEL308-109D1W3	C308D1	
45	UELC309D1W3	130	38	3.5	58.7	19.8	UEL309D1W3	C309D1	2.9
1 5/8	UELC309-110D1W3						UEL309-110D1W3	C309D1	
1 11/16	UELC309-111D1W3	5.1181	1 1/2	0.138	2.311	0.780	UEL309-111D1W3	C309D1	6.4
1 3/4	UELC309-112D1W3						UEL309-112D1W3	C309D1	
50	UELC310D1W3	140	40	3.5	66.6	24.6	UEL310D1W3	C310D1	3.5
1 13/16	UELC310-113D1W3						UEL310-113D1W3	C310D1	
1 7/8	UELC310-114D1W3	5.5118	1 37/64	0.138	2.622	0.969	UEL310-114D1W3	C310D1	7.7
1 15/16	UELC310-115D1W3						UEL310-115D1W3	C310D1	
55	UELC311D1W3	150	44	3.5	73	27.8	UEL311D1W3	C311D1	4.3
2	UELC311-200D1W3						UEL311-200D1W3	C311D1	
2 1/16	UELC311-201D1W3	5.9055	1 47/64	0.138	2.874	1.094	UEL311-201D1W3	C311D1	9.3
2 1/8	UELC311-202D1W3						UEL311-202D1W3	C311D1	
2 3/16	UELC311-203D1W3						UEL311-203D1W3	C311D1	

Remarks: 1) These numbers indicate relubricatable type. If maintenance free type is needed, please order without suffix "D1".
Note: Please refer to page 36 for size of grease fitting.

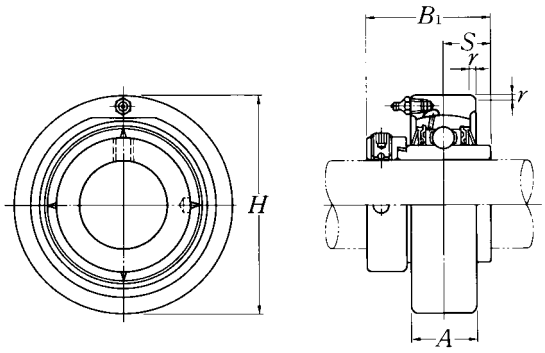

Shaft dia. mm / inch	Unit number 1)	Nominal dimensions mm / inch H	A	r	B1	S	Bearing number	Housing 1) number	Mass of unit kg / lb
60	UELC312D1W3	160	46	3.5	79.4	30.95	UEL312D1W3	C312D1	5.1
2 1/4	UELC312-204D1W3						UEL312-204D1W3	C312D1	
2 5/16	UELC312-205D1W3	6.2992	1 13/16	0.138	3.126	1.219	UEL312-205D1W3	C312D1	11
2 3/8	UELC312-206D1W3						UEL312-206D1W3	C312D1	
2 7/16	UELC312-207D1W3						UEL312-207D1W3	C312D1	
65	UELC313D1W3	170	50	3.5	85.7	32.55	UEL313D1W3	C313D1	6.2
2 1/2	UELC313-208D1W3	6.6929	1 31/32	0.138	3.374	1.281	UEL313-208D1W3	C313D1	14
2 9/16	UELC313-209D1W3						UEL313-209D1W3	C313D1	
70	UELC314D1W3	180	52	4	92.1	34.15	UEL314D1W3	C314D1	7.3
2 5/8	UELC314-210D1W3						UEL314-210D1W3	C314D1	
2 11/16	UELC314-211D1W3	7.0866	2 3/64	0.157	3.626	1.344	UEL314-211D1W3	C314D1	16
2 3/4	UELC314-212D1W3						UEL314-212D1W3	C314D1	
75	UELC315D1W3	190	55	4	100	37.3	UEL315D1W3	C315D1	8.5
2 13/16	UELC315-213D1W3						UEL315-213D1W3	C315D1	
2 7/8	UELC315-214D1W3	7.4803	2 11/64	0.157	3.937	1.469	UEL315-214D1W3	C315D1	19
2 15/16	UELC315-215D1W3						UEL315-215D1W3	C315D1	
3	UELC315-300D1W3						UEL315-300D1W3	C315D1	
80	UELC316D1W3	200	60	4	106.4	40.5	UEL316D1W3	C316D1	10
3 1/16	UELC316-301D1W3						UEL316-301D1W3	C316D1	
3 1/8	UELC316-302D1W3	7.8740	2 23/64	0.157	4.189	1.594	UEL316-302D1W3	C316D1	22
3 3/16	UELC316-303D1W3						UEL316-303D1W3	C316D1	
85	UELC317D1W3	215	64	4	109.5	42.05	UEL317D1W3	C317D1	13
3 1/4	UELC317-304D1W3						UEL317-304D1W3	C317D1	
3 5/16	UELC317-305D1W3	8.4646	2 33/64	0.157	4.311	1.656	UEL317-305D1W3	C317D1	29
3 7/16	UELC317-307D1W3						UEL317-307D1W3	C317D1	
90	UELC318D1W3	225	66	4	115.9	43.65	UEL318D1W3	C318D1	14
3 7/16	UELC318-307D1W3	8.8583	2 19/32	0.157	4.563	1.719	UEL318-307D1W3	C318D1	31
3 1/2	UELC318-308D1W3						UEL318-308D1W3	C318D1	

Remarks: 1) These numbers indicate relubricatable type. If maintenance free type is needed, please order without suffix "D1".
Note: Please refer to page 36 for size of grease fitting.

Cartridge units cast housing
Eccentric locking collar type

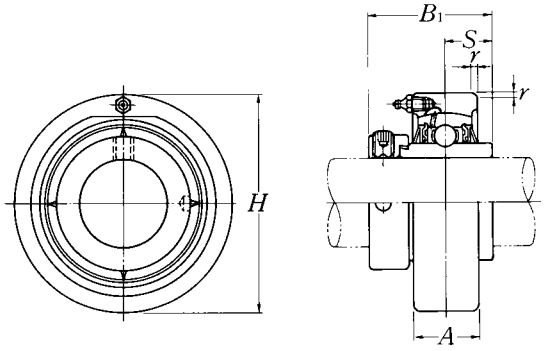

Shaft dia. mm inch	Unit number 1)	Nominal dimensions mm inch H	A	r	B1	S	Bearing number	Housing 1) number	Mass of unit kg lb
95	UELC319D1W3	240	72	4	122.3	38.9	UEL319D1W3	C319D1	17
3 5/8	UELC319-310D1W3						UEL319-310D1W3	C319D1	
3 11/16	UELC319-311D1W3	9.4488	2 53/64	0.157	4.815	1.531	UEL319-311D1W3	C319D1	37
3 3/4	UELC319-312D1W3						UEL319-312D1W3	C319D1	
100	UELC320D1W3	260	75	4	128.6	50	UEL320D1W3	C320D1	22
3 13/16	UELC320-313D1W3						UEL320-313D1W3	C320D1	
3 7/8	UELC320-314D1W3	10.2362	2 61/64	0.157	5.063	1.969	UEL320-314D1W3	C320D1	49
3 15/16	UELC320-315D1W3						UEL320-315D1W3	C320D1	
4	UELC320-400D1W3						UEL320-400D1W3	C320D1	
105	UELC321D1W3	260	75	4	139.7	48.4	UEL321D1W3	C321D1	21
110	UELC322D1W3	300	80	5	141.3	49.2	UEL322D1W3	C322D1	31

Remarks: 1) These numbers indicate relubricatable type. If maintenance free type is needed, please order without suffix "D1".
Note: Please refer to page 36 for size of grease fitting.

Mini stretcher units
Eccentric locking collar type

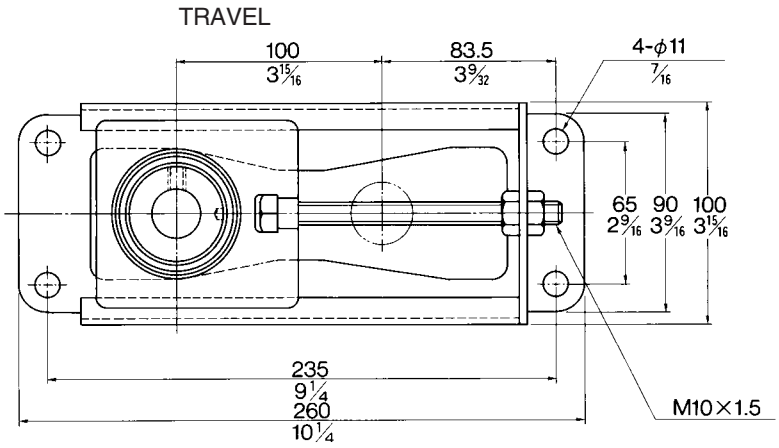

Shaft dia. mm / inch	Unit number	Nominal dimensions mm / inch A	B1	S	Bolt size mm / inch	Max. load 1) recommended N / lbf	Bearing number	Mass of unit kg / lb
12	AELPT201-10W3	37.1	28.6	6.5	M10	3 500	AEL201W3	1.1
1/2	AELPT201-008-10W3	1 29/64	1.126	0.256	3/8	770	AEL201-008W3	2.4
15	AELPT202-10W3	37.1	28.6	6.5	M10	3 500	AEL202W3	1.1
9/16	AELPT202-009-10W3	1 29/64	1.126	0.256	3/8	770	AEL202-009W3	2.4
5/8	AELPT202-010-10W3						AEL202-010W3	
17	AELPT203-10W3	37.1	28.6	6.5	M10	3 500	AEL203W3	1.1
11/16	AELPT203-011-10W3	1 29/64	1.126	0.256	3/8	770	AEL203-011W3	2.4
20	AELPT204-10W3	38.5	31	7.5	M10	3 500	AEL204W3	1.1
3/4	AELPT204-012-10W3	1 33/64	1.220	0.295	3/8	770	AEL204-012W3	2.4
25	AELPT205-10W3	38.5	31	7.5	M10	3 500	AEL205W3	1.2
13/16	AELPT205-013-10W3						AEL205-013W3	
7/8	AELPT205-014-10W3	1 33/64	1.220	0.295	3/8	770	AEL205-014W3	2.7
15/16	AELPT205-015-10W3						AEL205-015W3	
1	AELPT205-100-10W3						AEL205-100W3	

Remarks: 1) The Stretcher Unit is designed to only take a horizontal radial load, in line with the adjustment direction. Axial loads or vertical radial loads can deform or break the housing.

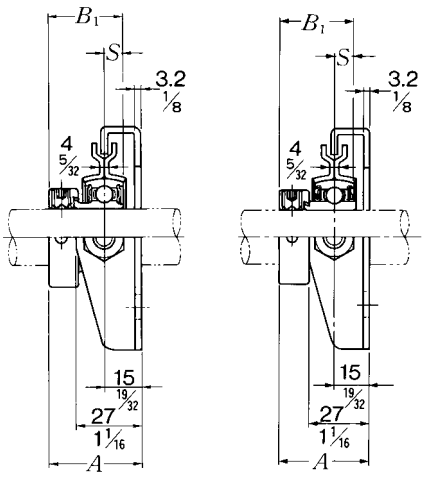

AELPT type **JELPT type**

Shaft dia. mm / inch	Unit number	Nominal dimensions mm / inch A	B1	S	Bolt size mm / inch	Max. load 1) recommended N / lbf	Bearing number	Mass of unit kg / lb
12	JELPT201-10W3	37.1	28.6	6.5	M10	3 500	JEL201W3	1.1
1/2	JELPT201-008-10W3	1 29/64	1.126	0.256	3/8	770	JEL201-008W3	2.4
15	JELPT202-10W3	37.1	28.6	6.5	M10	3 500	JEL202W3	1.1
9/16	JELPT202-009-10W3	1 29/64	1.126	0.256	3/8	770	JEL202-009W3	2.4
5/8	JELPT202-010-10W3						JEL202-010W3	
17	JELPT203-10W3	37.1	28.6	6.5	M10	3 500	JEL203W3	1.1
11/16	JELPT203-011-10W3	1 29/64	1.126	0.256	3/8	770	JEL203-011W3	2.4
20	JELPT204-10W3	38.5	31	7.5	M10	3 500	JEL204W3	1.1
3/4	JELPT204-012-10W3	1 33/64	1.220	0.295	3/8	770	JEL204-012W3	2.4
25	JELPT205-10W3	38.5	31	7.5	M10	3 500	JEL205W3	1.1
13/16	JELPT205-013-10W3						JEL205-013W3	
7/8	JELPT205-014-10W3	1 33/64	1.220	0.295	3/8	770	JEL205-014W3	2.4
15/16	JELPT205-015-10W3						JEL205-015W3	
1	JELPT205-100-10W3						JEL205-100W3	

Remarks: 1) The Stretcher Unit is designed to only take a horizontal radial load, in line with the adjustment direction. Axial loads or vertical radial loads can deform or break the housing.

Pillow blocks cast housing
Adapter type

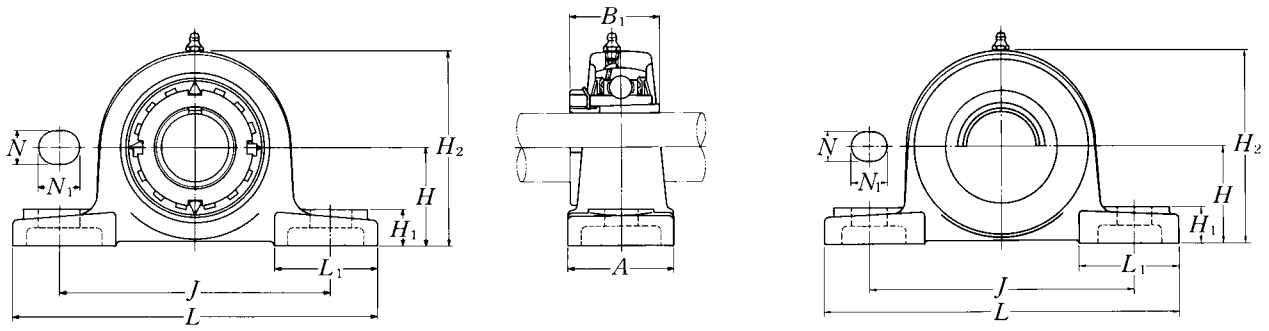

Pressed steel dust cover type
Open end: **S-UKP···D1**
Closed end: **SM-UKP···D1**

Shaft dia. mm / inch	Unit number 1) 2) 3)	Nominal dimensions (mm / inch) H	L	J	A	N	N_1	H_1	H_2	B_1	L_1	Bolt size mm / inch	Bearing number 2) 3)
20	UKP205D1;H2305X	36.5	140	105	38	13	16	15	71	35	42	M10	UK205D1;H2305X
3/4	UKP205D1;HE2305	1 7/16	5 1/2	4 1/8	1 1/2	1/2	5/8	19/32	2 25/32	1.378	1 21/32	3/8	UK205D1;HE2305
25	UKP206D1;H2306X	42.9	165	121	48	17	20	17	83	38	54	M14	UK206D1;H2306X
7/8	UKP206D1;HS2306	1 11/16	6 1/2	4 3/4	1 7/8	21/32	25/32	21/32	3 9/32	1.496	2 1/8	1/2	UK206D1;HS2306
1	UKP206D1;HE2306X												UK206D1;HE2306X
30	UKP207D1;H2307X	47.6	167	127	48	17	20	18	93	43	54	M14	UK207D1;H2307X
1 1/8	UKP207D1;HS2307	1 7/8	6 9/16	5	1 7/8	21/32	25/32	23/32	3 21/32	1.693	2 1/8	1/2	UK207D1;HS2307
35	UKP208D1;H2308X	49.2	184	137	54	17	20	18	98	46	52	M14	UK208D1;H2308X
1 1/4	UKP208D1;HE2308X	1 15/16	7 1/4	5 13/32	2 1/8	21/32	25/32	23/32	3 27/32	1.811	2 1/16	1/2	UK208D1;HE2308X
1 3/8	UKP208D1;HS2308X												UK208D1;HS2308X
40	UKP209D1;H2309X	54	190	146	54	17	20	20	106	50	60	M14	UK209D1;H2309X
1 7/16	UKP209D1;HA2309												UK209D1;HA2309
1 1/2	UKP209D1;HE2309X	2 1/8	7 15/32	5 3/4	2 1/8	21/32	25/32	25/32	4 3/16	1.969	2 3/8	1/2	UK209D1;HE2309X
1 5/8	UKP209D1;HS2309X												UK209D1;HS2309X
45	UKP210D1;H2310X	57.2	206	159	60	20	23	21	114	55	65	M16	UK210D1;H2310X
1 5/8	UKP210D1;HS2310												UK210D1;HS2310
1 11/16	UKP210D1;HA2310	2 1/4	8 1/8	6 1/4	2 3/8	25/32	29/32	13/16	4 1/2	2.165	2 9/16	5/8	UK210D1;HA2310
1 3/4	UKP210D1;HE2310X												UK210D1;HE2310X
50	UKP211D1;H2311X	63.5	219	171	60	20	23	23	126	59	65	M16	UK211D1;H2311X
1 7/8	UKP211D1;HS2311												UK211D1;HS2311
1 15/16	UKP211D1;HA2311	2 1/2	8 5/8	6 23/32	2 3/8	25/32	29/32	29/32	4 31/32	2.323	2 9/16	5/8	UK211D1;HA2311
2	UKP211D1;HE2311XY												UK211D1;HE2311XY
55	UKP212D1;H2312X	69.8	241	184	70	20	23	25	138	62	70	M16	UK212D1;H2312X
2 1/8	UKP212D1;HS2312	2 3/4	9 1/2	7 1/4	2 3/4	25/32	29/32	31/32	5 7/16	2.441	2 3/4	5/8	UK212D1;HS2312
60	UKP213D1;H2313X	76.2	265	203	70	25	28	27	151	65	77	M20	UK213D1;H2313X
2 3/16	UKP213D1;HA2313												UK213D1;HA2313
2 1/4	UKP213D1;HE2313X	3	10 7/16	8	2 3/4	31/32	1 3/32	1 1/16	5 15/16	2.559	3 1/32	3/4	UK213D1;HE2313X
2 3/8	UKP213D1;HS2313X												UK213D1;HS2313X

Remarks: 1) These numbers indicate relubricatable type. If maintenance free type is needed, please order without suffix "D1".
2) Adapter number with suffix "X" means a narrow slot type adapter sleeve.
In this case the lock washer with the straight inner prong should be used.
3) For HE2311XY, screw thread pitch different from the standard is applied, because of the thin thread section of sleeve.
To distinguish it, a suffix "Y" is added.

Note: Please refer to page 36 for size of grease fitting.

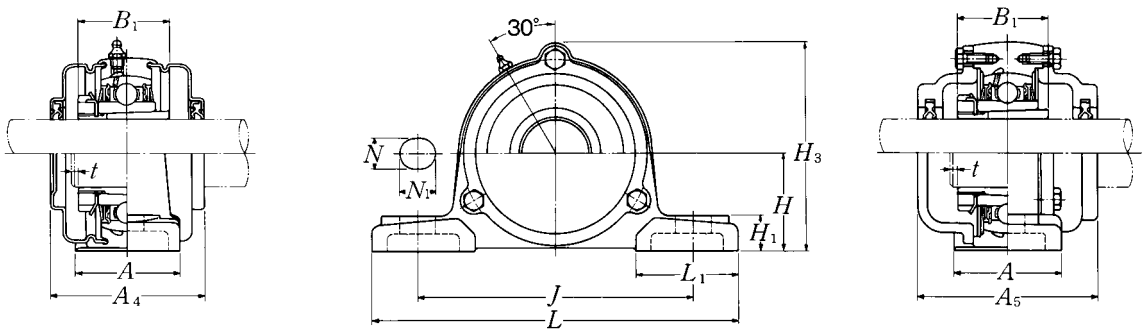

Cast dust cover type
Open end: **C-UKP···D1**
Closed end: **CM-UKP···D1**

Housing[1)] number	Unit number [1) 2) 3)] pressed steel dust cover type	Unit number [1) 2) 3)] cast dust cover type	Nominal dimensions mm t max.	A_4	inch H_3	A_5	Mass of unit kg UKP	S(SM)	lb C(CM)
P205D1	S(SM)-UKP205D1;H2305X	C(CM)-UKP205D1;H2305X	2	57	76	70	0.8	0.9	1.2
P205D1	S(SM)-UKP205ED1;HE2305	C(CM)-UKP205ED1;HE2305	5/64	2 1/4	3	2 3/4	1.8	2.0	2.7
P206D1	S(SM)-UKP206D1;H2306X	C(CM)-UKP206D1;H2306X	2	62	88	75	1.4	1.5	1.8
P206D1	S(SM)-UKP206SD1;HS2306	C(CM)-UKP206SD1;HS2306	5/64	2 7/16	3 15/32	2 15/16	3.1	3.3	4.0
P206D1	S(SM)-UKP206ED1;HE2306X	C(CM)-UKP206ED1;HE2306X							
P207D1	S(SM)-UKP207D1;H2307X	C(CM)-UKP207D1;H2307X	3	72	99	80	1.7	1.8	2.1
P207D1	S(SM)-UKP207SD1;HS2307	C(CM)-UKP207SD1;HS2307	1/8	2 27/32	3 29/32	3 5/32	3.7	4.0	4.6
P208D1	S(SM)-UKP208D1;H2308X	C(CM)-UKP208D1;H2308X	3	82	105	90	2.0	2.2	2.8
P208D1	S(SM)-UKP208ED1;HE2308X	C(CM)-UKP208ED1;HE2308X	1/8	3 7/32	4 1/8	3 17/32	4.4	4.9	6.2
P208D1	S(SM)-UKP208SD1;HS2308X	C(CM)-UKP208SD1;HS2308X							
P209D1	S(SM)-UKP209D1;H2309X	C(CM)-UKP209D1;H2309X	3	82	113	95	2.3	2.5	3.3
P209D1	S(SM)-UKP209AD1;HA2309	C(CM)-UKP209AD1;HA2309							
P209D1	S(SM)-UKP209ED1;HE2309X	C(CM)-UKP209ED1;HE2309X	1/8	3 7/32	4 7/16	3 3/4	5.1	5.5	7.3
P209D1	S(SM)-UKP209SD1;HS2309X	C(CM)-UKP209SD1;HS2309X							
P210D1	S(SM)-UKP210D1;H2310X	C(CM)-UKP210D1;H2310X	3	87	119	100	2.9	3.0	3.9
P210D1	S(SM)-UKP210SD1;HS2310	C(CM)-UKP210SD1;HS2310							
P210D1	S(SM)-UKP210AD1;HA2310	C(CM)-UKP210AD1;HA2310	1/8	3 7/16	4 11/16	3 15/16	6.4	6.6	8.6
P210D1	S(SM)-UKP210ED1;HE2310X	C(CM)-UKP210ED1;HE2310X							
P211D1	S(SM)-UKP211D1;H2311X	C(CM)-UKP211D1;H2311X	4	92	130	100	3.6	3.7	4.8
P211D1	S(SM)-UKP211SD1;HS2311	C(CM)-UKP211SD1;HS2311							
P211D1	S(SM)-UKP211AD1;HA2311	C(CM)-UKP211AD1;HA2311	5/32	3 5/8	5 1/8	3 15/16	7.9	8.2	11
P211D1	S(SM)-UKP211ED1;HE2311XY	C(CM)-UKP211ED1;HE2311XY							
P212D1	S(SM)-UKP212D1;H2312X	C(CM)-UKP212D1;H2312X	4	102	143	115	4.7	5.1	6.2
P212D1	S(SM)-UKP212SD1;HS2312	C(CM)-UKP212SD1;HS2312	5/32	4 1/32	5 5/8	4 17/32	10	11	14
P213D1	S(SM)-UKP213D1;H2313X	C(CM)-UKP213D1;H2313X	4	107	155	120	5.7	5.9	7.6
P213D1	S(SM)-UKP213AD1;HA2313	C(CM)-UKP213AD1;HA2313							
P213D1	S(SM)-UKP213ED1;HE2313X	C(CM)-UKP213ED1;HE2313X	5/32	4 7/32	6 3/32	4 23/32	13	13	17
P213D1	S(SM)-UKP213SD1;HS2313X	C(CM)-UKP213SD1;HS2313X							

Pillow blocks cast housing
Adapter type

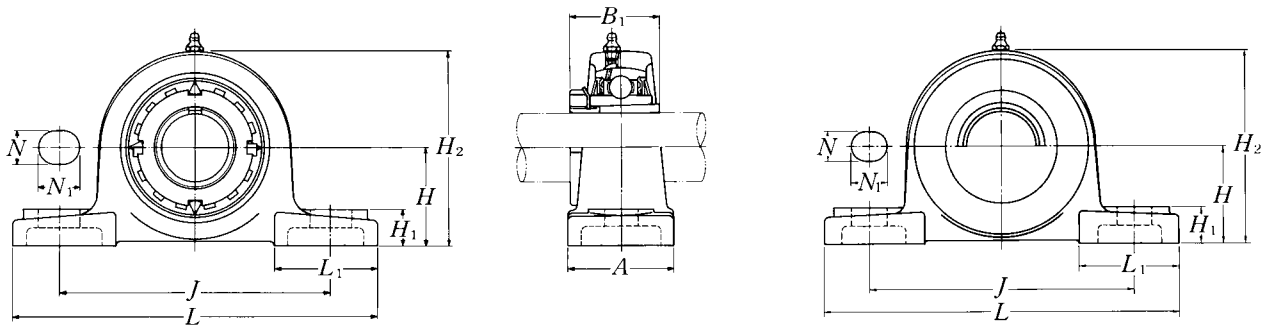

Pressed steel dust cover type
Open end: **S-UKP···D1**
Closed end: **SM-UKP···D1**

Shaft dia. mm / inch	Unit number 1) 2) 3)	Nominal dimensions mm / inch H	L	J	A	N	N_1	H_1	H_2	B_1	L_1	Bolt size mm / inch	Bearing number 2) 3)
65	UKP215D1;H2315X	82.6	275	217	74	25	28	28	163	73	80	M20	UK215D1;H2315X
2 7/16	UKP215D1;HA2315	3 1/4	10 13/16	8 17/32	2 29/32	31/32	1 3/32	1 3/32	6 13/32	2.874	3 5/32	3/4	UK215D1;HA2315
2 1/2	UKP215D1;HE2315X												UK215D1;HE2315X
70	UKP216D1;H2316X	88.9	292	232	78	25	28	30	175	78	85	M20	UK216D1;H2316X
2 11/16	UKP216D1;HA2316	3 1/2	11 1/2	9 1/8	3 1/16	31/32	1 3/32	1 3/16	6 7/8	3.071	3 11/32	3/4	UK216D1;HA2316
2 3/4	UKP216D1;HE2316X												UK216D1;HE2316X
75	UKP217D1;H2317X	95.2	310	247	83	25	28	32	187	82	85	M20	UK217D1;H2317X
2 15/16	UKP217D1;HA2317X	3 3/4	12 7/32	9 23/32	3 9/32	31/32	1 3/32	1 1/4	7 3/8	3.228	3 11/32	3/4	UK217D1;HA2317X
3	UKP217D1;HE2317X												UK217D1;HE2317X
80	UKP218D1;H2318X	101.6	327	262	88	27	30	33	200	86	90	M22	UK218D1;H2318X
3 3/16	UKP218D1;HA2318X	4	12 7/8	10 5/16	3 15/32	1 1/16	1 3/16	1 5/16	7 7/8	3.386	3 17/32	7/8	UK218D1;HA2318X

Remarks: 1) These numbers indicate relubricatable type. If maintenance free type is needed, please order without suffix "D1".
2) Adapter number with suffix "X" means a narrow slot type adapter sleeve.
In this case the lock washer with the straight inner prong should be used.
3) For HE2311XY, screw thread pitch different from the standard is applied, because of the thin thread section of sleeve.
To distinguish it, a suffix "Y" is added.

Note: Please refer to page 36 for size of grease fitting.

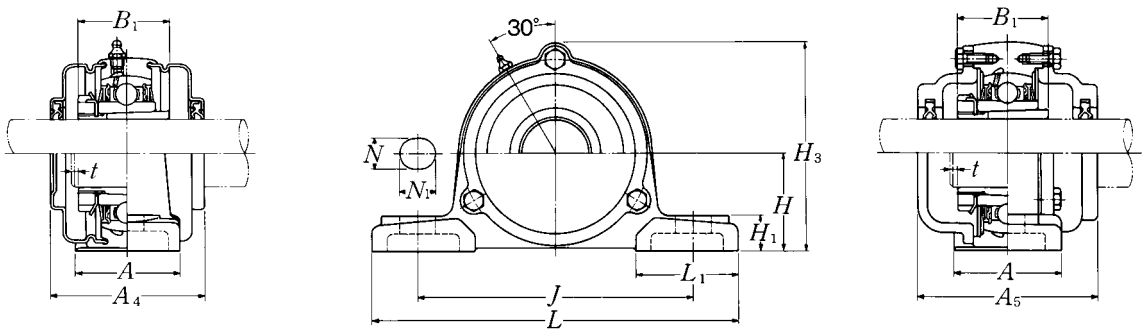

Cast dust cover type
Open end: **C-UKP···D1**
Closed end: **CM-UKP···D1**

Housing[1)] number	Unit number [1) 2) 3)] pressed steel dust cover type	Unit number [1) 2) 3)] cast dust cover type	Nominal dimensions mm t max.	A_4	inch H_3	A_5	Mass of unit kg UKP	S(SM)	lb C(CM)
P215D1	—	C(CM)-UKP215D1;H2315X	4	—	168	135	7.5	—	10
P215D1	—	C(CM)-UKP215AD1;HA2315	5/32	—	6 5/8	5 5/16	17	—	22
P215D1		C(CM)-UKP215ED1;HE2315X							
P216D1	—	C(CM)-UKP216D1;H2316X	4	—	181	145	9.2	—	12
P216D1	—	C(CM)-UKP216AD1;HA2316	5/32	—	7 1/8	5 23/32	20	—	26
P216D1		C(CM)-UKP216ED1;HE2316X							
P217D1	—	C(CM)-UKP217D1;H2317X	5	—	191	155	11	—	14
P217D1	—	C(CM)-UKP217AD1;HA2317X	13/64	—	7 17/32	6 3/32	24	—	31
P217D1		C(CM)-UKP217ED1;HE2317X							
P218D1	—	C(CM)-UKP218D1;H2318X	5	—	204	165	13	—	16
P218D1	—	C(CM)-UKP218AD1;HA2318X	13/64	—	8 1/32	6 1/2	29	—	35

Pillow blocks cast housing
Adapter type

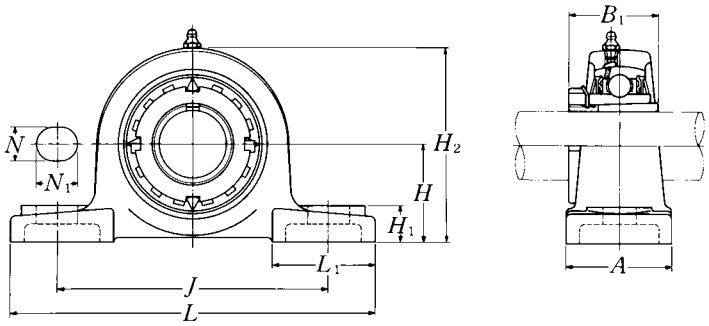

Shaft dia. mm / inch	Unit number 1) 2) 3)	Nominal dimensions mm / inch H	L	J	A	N	N1	H1	H2	B1	L1	Bolt size mm / inch	Bearing number 2) 3)
20	UKP305D1;H2305X	45	175	132	45	17	20	15	85	35	54	M14	UK305D1;H2305X
3/4	UKP305D1;HE2305	1 49/64	6 7/8	5 3/16	1 25/32	21/32	25/32	19/32	3 11/32	1.378	2 1/8	1/2	UK305D1;HE2305
25	UKP306D1;H2306X	50	180	140	50	17	20	18	95	38	54	M14	UK306D1;H2306X
7/8	UKP306D1;HS2306	1 31/32	7 3/32	5 1/2	1 31/32	21/32	25/32	23/32	3 3/4	1.496	2 1/8	1/2	UK306D1;HS2306
1	UKP306D1;HE2306X												UK306D1;HE2306X
30	UKP307D1;H2307X	56	210	160	56	17	25	20	106	43	60	M14	UK307D1;H2307X
1 1/8	UKP307D1;HS2307	2 13/64	8 9/32	6 5/16	2 7/32	21/32	31/32	25/32	4 3/16	1.693	2 3/8	1/2	UK307D1;HS2307
35	UKP308D1;H2308X	60	220	170	60	17	27	22	116	46	60	M14	UK308D1;H2308X
1 1/4	UKP308D1;HE2308X	2 23/64	8 21/32	6 11/16	2 3/8	21/32	1 1/16	7/8	4 9/16	1.811	2 3/8	1/2	UK308D1;HE2308X
1 3/8	UKP308D1;HS2308X												UK308D1;HS2308X
40	UKP309D1;H2309X	67	245	190	67	20	30	24	129	50	65	M16	UK309D1;H2309X
1 7/16	UKP309D1;HA2309												UK309D1;HA2309
1 1/2	UKP309D1;HE2309X	2 41/64	9 21/32	7 15/32	2 5/8	25/32	1 3/16	15/16	5 3/32	1.969	2 9/16	5/8	UK309D1;HE2309X
1 5/8	UKP309D1;HS2309X												UK309D1;HS2309X
45	UKP310D1;H2310X	75	275	212	75	20	35	27	143	55	75	M16	UK310D1;H2310X
1 5/8	UKP310D1;HS2310												UK310D1;HS2310
1 11/16	UKP310D1;HA2310	2 61/64	10 13/16	8 11/32	2 15/16	25/32	1 3/8	1 1/16	5 5/8	2.165	2 15/16	5/8	UK310D1;HA2310
1 3/4	UKP310D1;HE2310X												UK310D1;HE2310X
50	UKP311D1;H2311X	80	310	236	80	20	38	30	154	59	85	M16	UK311D1;H2311X
1 7/8	UKP311D1;HS2311												UK311D1;HS2311
1 15/16	UKP311D1;HA2311	3 5/32	12 7/32	9 9/32	3 5/32	25/32	1 1/2	1 3/16	6 1/16	2.323	3 11/32	5/8	UK311D1;HA2311
2	UKP311D1;HE2311XY												UK311D1;HE2311XY
55	UKP312D1;H2312X	85	330	250	85	25	38	32	165	62	95	M20	UK312D1;H2312X
2 1/8	UKP312D1;HS2312	3 11/32	13	9 27/32	3 11/32	31/32	1 1/2	1 1/4	6 1/2	2.441	3 3/4	3/4	UK312D1;HS2312
60	UKP313D1;H2313X	90	340	260	90	25	38	33	176	65	105	M20	UK313D1;H2313X
2 3/16	UKP313D1;HA2313												UK313D1;HA2313
2 1/4	UKP313D1;HE2313X	3 35/64	13 3/8	10 1/4	3 17/32	31/32	1 1/2	1 5/16	6 15/16	2.559	4 1/8	3/4	UK313D1;HE2313X
2 3/8	UKP313D1;HS2313X												UK313D1;HS2313X

Remarks: 1) These numbers indicate relubricatable type. If maintenance free type is needed, please order without suffix "D1".
2) Adapter number with suffix "X" means a narrow slot type adapter sleeve.
In this case the lock washer with the straight inner prong should be used.
3) For HE2311XY, screw thread pitch different from the standard is applied, because of the thin thread section of sleeve.
To distinguish it, a suffix "Y" is added.

Note: Please refer to page 36 for size of grease fitting.

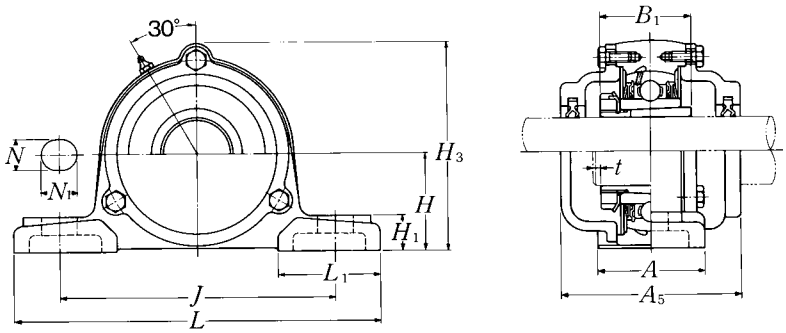

Cast dust cover type
Open end: **C-UKP···D1**
Closed end: **CM-UKP···D1**

Housing[1)] number	Unit number [1) 2) 3)] cast dust cover type	Nominal dimensions mm / inch: t max.	H_3	A_5	Mass of unit kg: UKP	lb: C(CM)
P305D1	C(CM)-UKP305D1;H2305X	2	91	80	1.4	1.9
P305D1	C(CM)-UKP305ED1;HE2305	5/64	3 19/32	3 5/32	3.1	4.2
P306D1	C(CM)-UKP306D1;H2306X	2	105	85	1.8	2.6
P306D1	C(CM)-UKP306SD1;HS2306	5/64	4 1/8	3 11/32	4.0	5.7
P306D1	C(CM)-UKP306ED1;HE2306X					
P307D1	C(CM)-UKP307D1;H2307X	3	115	95	2.6	3.3
P307D1	C(CM)-UKP307SD1;HS2307	1/8	4 17/32	3 3/4	5.7	7.3
P308D1	C(CM)-UKP308D1;H2308X	3	125	105	3.1	4.2
P308D1	C(CM)-UKP308ED1;HE2308X	1/8	4 29/32	4 1/8	6.8	9.3
P308D1	C(CM)-UKP308SD1;HS2308X					
P309D1	C(CM)-UKP309D1;H2309X	3	140	110	4.1	5.6
P309D1	C(CM)-UKP309AD1;HA2309					
P309D1	C(CM)-UKP309ED1;HE2309X	1/8	5 1/2	4 11/32	9.0	12
P309D1	C(CM)-UKP309SD1;HS2309X					
P310D1	C(CM)-UKP310D1;H2310X	3	156	120	5.6	7.2
P310D1	C(CM)-UKP310SD1;HS2310					
P310D1	C(CM)-UKP310AD1;HA2310	1/8	6 5/32	4 23/32	12	16
P310D1	C(CM)-UKP310ED1;HE2310X					
P311D1	C(CM)-UKP311D1;H2311X	4	166	125	7.3	9.0
P311D1	C(CM)-UKP311SD1;HS2311					
P311D1	C(CM)-UKP311AD1;HA2311	5/32	6 17/32	4 29/32	16	20
P311D1	C(CM)-UKP311ED1;HE2311XY					
P312D1	C(CM)-UKP312D1;H2312X	4	179	135	9.3	11
P312D1	C(CM)-UKP312SD1;HS2312	5/32	7 1/16	5 5/16	21	24
P313D1	C(CM)-UKP313D1;H2313X	4	190	140	10	12
P313D1	C(CM)-UKP313AD1;HA2313					
P313D1	C(CM)-UKP313ED1;HE2313X	5/32	7 15/32	5 1/2	22	26
P313D1	C(CM)-UKP313SD1;HS2313X					

Pillow blocks cast housing
Adapter type

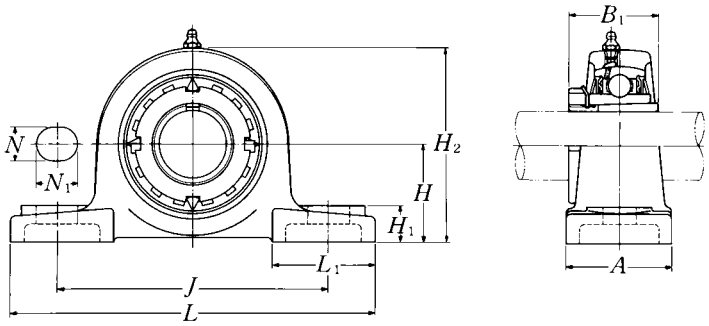

Shaft dia. mm / inch	Unit number 1) 2) 3)	Nominal dimensions mm / inch H	L	J	A	N	N1	H1	H2	B1	L1	Bolt size mm / inch	Bearing number 2) 3)
65 2 7/16 2 1/2	UKP315D1;H2315X UKP315D1;HA2315 UKP315D1;HE2315X	100 3 15/16	380 14 31/32	290 11 13/32	100 3 15/16	27 1 1/16	40 1 9/16	35 1 3/8	198 7 25/32	73 2.874	110 4 11/32	M22 7/8	UK315D1;H2315X UK315D1;HA2315 UK315D1;HE2315X
70 2 11/16 2 3/4	UKP316D1;H2316X UKP316D1;HA2316 UKP316D1;HE2316X	106 4 11/64	400 15 3/4	300 11 13/16	110 4 11/32	27 1 1/16	40 1 9/16	40 1 9/16	210 8 9/32	78 3.071	110 4 11/32	M22 7/8	UK316D1;H2316X UK316D1;HA2316 UK316D1;HE2316X
75 2 15/16 3	UKP317D1;H2317X UKP317D1;HA2317X UKP317D1;HE2317X	112 4 13/32	420 16 17/32	320 12 19/32	110 4 11/32	33 1 5/16	45 1 25/32	40 1 9/16	220 8 21/32	82 3.228	120 4 23/32	M27 1	UK317D1;H2317X UK317D1;HA2317X UK317D1;HE2317X
80 3 3/16	UKP318D1;H2318X UKP318D1;HA2318X	118 4 41/64	430 16 15/16	330 13	110 4 11/32	33 1 5/16	45 1 25/32	45 1 25/32	235 9 1/4	86 3.386	120 4 23/32	M27 1	UK318D1;H2318X UK318D1;HA2318X
85 3 1/4	UKP319D1;H2319X UKP319D1;HE2319X	125 4 59/64	470 18 1/2	360 14 3/16	120 4 23/32	36 1 13/32	50 1 31/32	45 1 25/32	250 9 27/32	90 3.543	125 4 29/32	M30 1 1/8	UK319D1;H2319X UK319D1;HE2319X
90 3 7/16 3 1/2	UKP320D1;H2320X UKP320D1;HA2320 UKP320D1;HE2320X	140 5 33/64	490 19 9/32	380 14 31/32	120 4 23/32	36 1 13/32	50 1 31/32	50 1 31/32	275 10 13/16	97 3.819	130 5 1/8	M30 1 1/8	UK320D1;H2320X UK320D1;HA2320 UK320D1;HE2320X
100	UKP322D1;H2322X	150	520	400	140	40	55	55	300	105	135	M33	UK322D1;H2322X
110	UKP324D1;H2324X	160	570	450	140	40	55	65	320	112	140	M33	UK324D1;H2324X
115	UKP326D1;H2326	180	600	480	140	40	55	75	355	121	140	M33	UK326D1;H2326
125	UKP328D1;H2328	200	620	500	140	40	55	75	390	131	140	M33	UK328D1;H2328

Remarks: 1) These numbers indicate relubricatable type. If maintenance free type is needed, please order without suffix "D1".
2) Adapter number with suffix "X" means a narrow slot type adapter sleeve.
In this case the lock washer with the straight inner prong should be used.
3) For HE2311XY, screw thread pitch different from the standard is applied, because of the thin thread section of sleeve.
To distinguish it, a suffix "Y" is added.

Note: Please refer to page 36 for size of grease fitting.

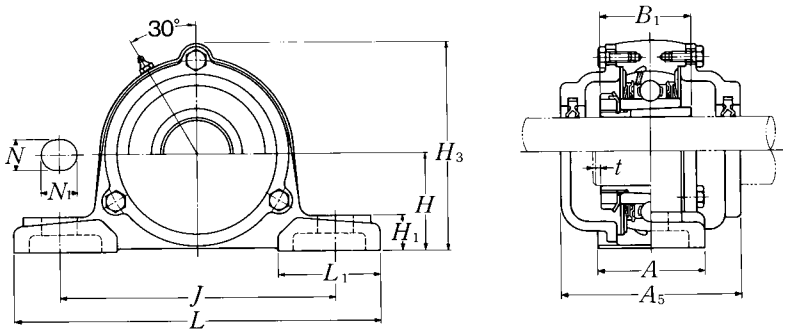

Cast dust cover type
Open end: **C-UKP···D1**
Closed end: **CM-UKP···D1**

Housing number 1)	Unit number 1) 2) 3) cast dust cover type	Nominal dimensions mm / inch			Mass of unit kg / lb	
		t max.	H_3	A_5	UKP	C(CM)
P315D1	C(CM)-UKP315D1;H2315X	4	210	150	14	18
P315D1	C(CM)-UKP315AD1;HA2315	5/32	8 9/32	5 29/32	31	40
P315D1	C(CM)-UKP315ED1;HE2315X					
P316D1	C(CM)-UKP316D1;H2316X	4	221	155	17	21
P316D1	C(CM)-UKP316AD1;HA2316	5/32	8 11/16	6 3/32	37	46
P316D1	C(CM)-UKP316ED1;HE2316X					
P317D1	C(CM)-UKP317D1;H2317X	5	235	170	19	24
P317D1	C(CM)-UKP317AD1;HA2317X	13/64	9 1/4	6 11/16	44	60
P317D1	C(CM)-UKP317ED1;HE2317X					
P318D1	C(CM)-UKP318D1;H2318X	5	246	170	22	28
P318D1	C(CM)-UKP318AD1;HA2318X	13/64	9 11/16	6 11/16	53	68
P319D1	C(CM)-UKP319D1;H2319X	5	258	180	27	33
P319D1	C(CM)-UKP319ED1;HE2319X	13/64	10 5/32	7 3/32	64	84
P320D1	C(CM)-UKP320D1;H2320X	5	283	190	33	40
P320D1	C(CM)-UKP320AD1;HA2320	13/64	11 5/32	7 15/32	77	104
P320D1	C(CM)-UKP320ED1;HE2320X					
P322D1	C(CM)-UKP322D1;H2322X	5	313	200	43	53
P324D1	C(CM)-UKP324D1;H2324X	5	335	215	50	67
P326D1	C(CM)-UKP326D1;H2326	6	375	225	69	86
P328D1	C(CM)-UKP328D1;H2328	6	407	235	84	101

Pillow blocks cast housing
Adapter type

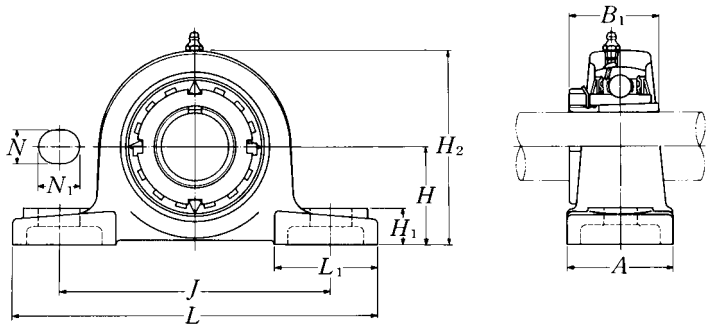

Shaft dia. mm / inch	Unit number 1) 2) 3)	Nominal dimensions mm / inch H	L	J	A	N	N1	H1	H2	B1	L1	Bolt size mm / inch
20	UKPX05D1;H2305X	44.4	159	119	51	17	20	18	85	35	50	M14
3/4	UKPX05D1;HE2305	1 3/4	6 1/4	4 11/16	2	21/32	25/32	23/32	3 11/32	1.378	1 31/32	1/2
25	UKPX06D1;H2306X	47.6	175	127	57	17	20	20	93	38	54	M14
7/8	UKPX06D1;HS2306	1 7/8	6 7/8	5	2 1/4	21/32	25/32	25/32	3 21/32	1.496	2 1/8	1/2
1	UKPX06D1;HE2306X											
30	UKPX07D1;H2307X	54	203	144	57	17	20	21	105	43	60	M14
1 1/8	UKPX07D1;HS2307	2 1/8	8	5 21/32	2 1/4	21/32	25/32	13/16	4 1/8	1.693	2 3/8	1/2
35	UKPX08D1;H2308X	58.7	222	156	67	20	23	26	111	46	65	M16
1 1/4	UKPX08D1;HE2308X	2 5/16	8 3/4	6 5/32	2 5/8	25/32	29/32	1 1/32	4 3/8	1.811	2 9/16	5/8
1 3/8	UKPX08D1;HS2308X											
40	UKPX09D1;H2309X	58.7	222	156	67	20	23	26	116	50	65	M16
1 7/16	UKPX09D1;HA2309											
1 1/2	UKPX09D1;HE2309X	2 5/16	8 3/4	6 5/32	2 5/8	25/32	29/32	1 1/32	4 9/16	1.969	2 9/16	5/8
1 5/8	UKPX09D1;HS2309X											
45	UKPX10D1;H2310X	63.5	241	171	73	20	23	27	126	55	70	M16
1 5/8	UKPX10D1;HS2310											
1 11/16	UKPX10D1;HA2310	2 1/2	9 1/2	6 23/32	2 7/8	25/32	29/32	1 1/16	4 31/32	2.165	2 3/4	5/8
1 3/4	UKPX10D1;HE2310X											
50	UKPX11D1;H2311X	69.8	260	184	79	25	28	30	137	59	75	M20
1 7/8	UKPX11D1;HS2311											
1 15/16	UKPX11D1;HA2311	2 3/4	10 1/4	7 1/4	3 1/8	31/32	1 3/32	1 3/16	5 13/32	2.323	2 15/16	3/4
2	UKPX11D1;HE2311XY											
55	UKPX12D1;H2312X	76.2	286	203	83	25	28	33	151	62	80	M20
2 1/8	UKPX12D1;HS2312	3	11 1/4	8	3 9/32	31/32	1 3/32	1 5/16	5 15/16	2.441	3 5/32	3/4
60	UKPX13D1;H2313X	76.2	286	203	83	25	28	33	154	65	80	M20
2 3/16	UKPX13D1;HA2313											
2 1/4	UKPX13D1;HE2313X	3	11 1/4	8	3 9/32	31/32	1 3/32	1 5/16	6 1/16	2.559	3 5/32	3/4
2 3/8	UKPX13D1;HS2313X											

Remarks: 1) These numbers indicate relubricatable type. If maintenance free type is needed, please order without suffix "D1".
2) Adapter number with suffix "X" means a narrow slot type adapter sleeve.
In this case the lock washer with the straight inner prong should be used.
3) For HE2311XY, screw thread pitch different from the standard is applied, because of the thin thread section of sleeve.
To distinguish it, a suffix "Y" is added.

Note: Please refer to page 36 for size of grease fitting.

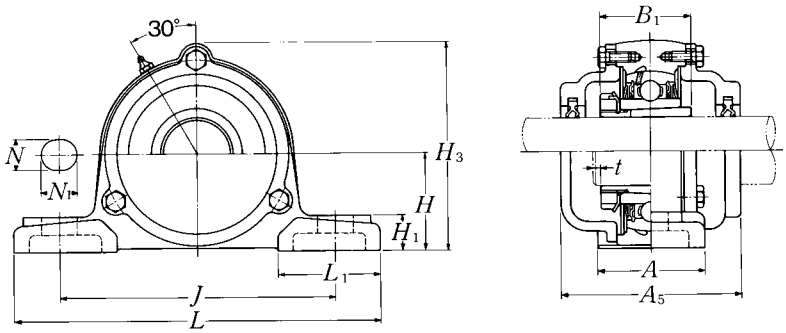

Cast dust cover type
Open end: **C-UKPX···D1**
Closed end: **CM-UKPX···D1**

Bearing number 2) 3)	Housing 1) number	Unit number 1) 2) 3) cast dust cover type	Nominal dimensions mm / inch t	H_3	A_5	Mass of unit kg / lb UKPX	C(CM)
UKX05D1;H2305X	PX05D1	C(CM)-UKPX05D1;H2305X	2	89	75	1.4	1.8
UKX05D1;HE2305	PX05D1	C(CM)-UKPX05ED1;HE2305	5/64	3 1/2	2 15/16	3.1	4.0
UKX06D1;H2306X	PX06D1	C(CM)-UKPX06D1;H2306X	2	99	80	1.7	2.2
UKX06D1;HS2306	PX06D1	C(CM)-UKPX06SD1;HS2306	5/64	3 29/32	3 5/32	3.8	4.9
UKX06D1;HE2306X	PX06D1	C(CM)-UKPX06ED1;HE2306X					
UKX07D1;H2307X	PX07D1	C(CM)-UKPX07D1;H2307X	3	110	90	2.5	3.3
UKX07D1;HS2307	PX07D1	C(CM)-UKPX07SD1;HS2307	1/8	4 11/32	3 17/32	5.5	7.3
UKX08D1;H2308X	PX08D1	C(CM)-UKPX08D1;H2308X	3	118	95	3.2	4.1
UKX08D1;HE2308X	PX08D1	C(CM)-UKPX08ED1;HE2308X	1/8	4 41/64	3 3/4	7.1	9.0
UKX08D1;HS2308X	PX08D1	C(CM)-UKPX08SD1;HS2308X					
UKX09D1;H2309X	PX09D1	C(CM)-UKPX09D1;H2309X	3	120	100	3.3	4.3
UKX09D1;HA2309	PX09D1	C(CM)-UKPX09AD1;HA2309					
UKX09D1;HE2309X	PX09D1	C(CM)-UKPX09ED1;HE2309X	1/8	4 23/32	3 15/16	7.3	9.5
UKX09D1;HS2309X	PX09D1	C(CM)-UKPX09SD1;HS2309X					
UKX10D1;H2310X	PX10D1	C(CM)-UKPX10D1;H2310X	3	130	100	4.2	5.4
UKX10D1;HS2310	PX10D1	C(CM)-UKPX10SD1;HS2310					
UKX10D1;HA2310	PX10D1	C(CM)-UKPX10AD1;HA2310	1/8	5 1/8	3 15/16	9.3	12
UKX10D1;HE2310X	PX10D1	C(CM)-UKPX10ED1;HE2310X					
UKX11D1;H2311X	PX11D1	C(CM)-UKPX11D1;H2311X	4	144	115	5.3	6.8
UKX11D1;HS2311	PX11D1	C(CM)-UKPX11SD1;HS2311					
UKX11D1;HA2311	PX11D1	C(CM)-UKPX11AD1;HA2311	5/32	5 21/32	4 17/32	12	15
UKX11D1;HE2311XY	PX11D1	C(CM)-UKPX11ED1;HE2311XY					
UKX12D1;H2312X	PX12D1	C(CM)-UKPX12D1;H2312X	4	155	120	6.8	8.6
UKX12D1;HS2312	PX12D1	C(CM)-UKPX12SD1;HS2312	5/32	6 3/32	4 23/32	15	19
UKX13D1;H2313X	PX13D1	C(CM)-UKPX13D1;H2313X	4	159	135	6.9	9.2
UKX13D1;HA2313	PX13D1	C(CM)-UKPX13AD1;HA2313					
UKX13D1;HE2313X	PX13D1	C(CM)-UKPX13ED1;HE2313X	5/32	1/4	5 5/16	15	20
UKX13D1;HS2313X	PX13D1	C(CM)-UKPX13SD1;HS2313X					

Pillow blocks cast housing
Adapter type

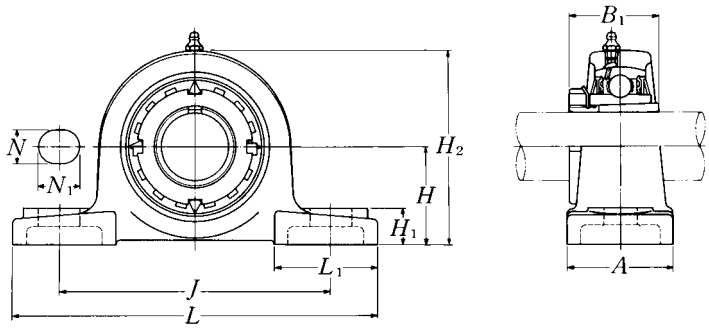

Shaft dia. mm / inch	Unit number 1) 2) 3)	Nominal dimensions mm / inch										Bolt size mm / inch
		H	L	J	A	N	N1	H1	H2	B1	L1	
65	UKPX15D1;H2315X	88.9	330	229	89	27	30	35	175	73	95	M22
2 7/16	UKPX15D1;HA2315	3 1/2	13	9 1/32	3 1/2	1 1/16	1 3/16	1 3/8	6 7/8	2.874	3 3/4	7/8
2 1/2	UKPX15D1;HE2315X											
70	UKPX16D1;H2316X	101.6	381	283	102	27	30	40	194	78	110	M22
2 11/16	UKPX16D1;HA2316	4	15	11 5/32	4 1/32	1 1/16	1 3/16	1 9/16	7 5/8	3.071	4 11/32	7/8
2 3/4	UKPX16D1;HE2316X											
75	UKPX17D1;H2317X	101.6	381	283	102	27	30	40	200	82	110	M22
2 15/16	UKPX17D1;HA2317X	4	15	11 5/32	4 1/32	1 1/16	1 3/16	1 9/16	7 7/8	3.228	4 11/32	7/8
3	UKPX17D1;HE2317X											
80	UKPX18D1;H2318X	101.6	381	283	111	27	30	40	206	86	110	M22
3 3/16	UKPX18D1;HA2318X	4	15	11 5/32	4 3/8	1 1/16	1 3/16	1 9/16	8 1/8	3.386	4 11/32	7/8
90	UKPX20D1;H2320X	127	432	337	121	33	36	45	244	97	125	M27

Remarks: 1) These numbers indicate relubricatable type. If maintenance free type is needed, please order without suffix "D1".
2) Adapter number with suffix "X" means a narrow slot type adapter sleeve.
In this case the lock washer with the straight inner prong should be used.
3) For HE2311XY, screw thread pitch different from the standard is applied, because of the thin thread section of sleeve.
To distinguish it, a suffix "Y" is added.

Note: Please refer to page 36 for size of grease fitting.

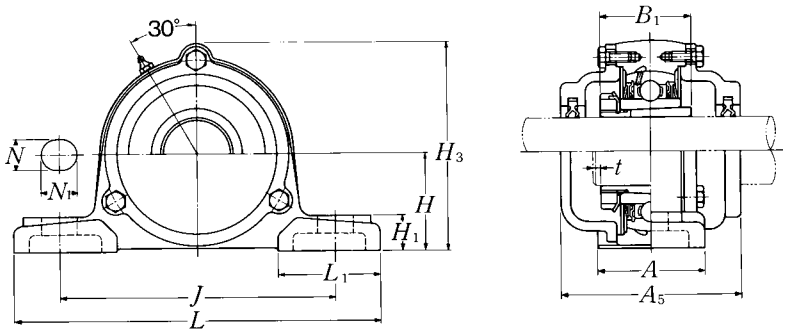

Cast dust cover type
Open end: **C-UKPX···D1**
Closed end: **CM-UKPX···D1**

Bearing number 2) 3)	Housing 1) number	Unit number 1) 2) 3) cast dust cover type	Nominal dimensions mm / inch t	H_3	A_5	Mass of unit kg / lb UKPX	C(CM)
UKX15D1;H2315X	PX15D1	C(CM)-UKPX15D1;H2315X	4	181	145	10	13
UKX15D1;HA2315	PX15D1	C(CM)-UKPX15AD1;HA2315	5/32	7 1/8	5 23/32	22	29
UKX15D1;HE2315X	PX15D1	C(CM)-UKPX15ED1;HE2315X					
UKX16D1;H2316X	PX16D1	C(CM)-UKPX16D1;H2316X	4	198	155	14	17
UKX16D1;HA2316	PX16D1	C(CM)-UKPX16AD1;HA2316	5/32	7 25/32	6 3/32	31	37
UKX16D1;HE2316X	PX16D1	C(CM)-UKPX16ED1;HE2316X					
UKX17D1;H2317X	PX17D1	C(CM)-UKPX17D1;H2317X	5	204	165	15	18
UKX17D1;HA2317X	PX17D1	C(CM)-UKPX17AD1;HA2317X	13/64	8 1/32	6 1/2	33	40
UKX17D1;HE2317X	PX17D1	C(CM)-UKPX17ED1;HE2317X					
UKX18D1;H2318X	PX18D1	C(CM)-UKPX18D1;H2318X	5	208	180	16	20
UKX18D1;HA2318X	PX18D1	C(CM)-UKPX18AD1;HA2318X	13/64	8 3/16	7 3/32	35	44
UKX20D1;H2320X	PX20D1	C(CM)-UKPX20D1;H2320X	5	244	195	24	28

Square flanged units cast housing
Adapter type

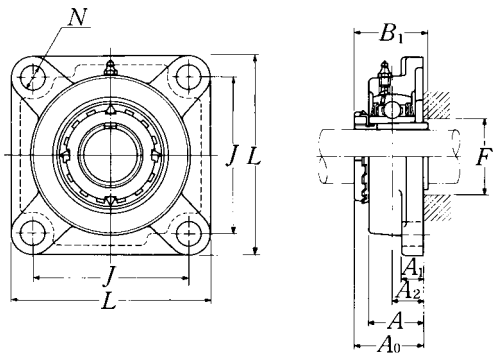

Shaft dia. mm / inch	Unit number 1) 2) 3)	Nominal dimensions L	J	A2	A1 (mm)	A (mm)	N (inch)	A0	B1	F min.	Bolt size mm / inch	Bearing number 2) 3)
20	UKF205D1;H2305X	95	70	16	13	27	12	35.5	35	30	M10	UK205D1;H2305X
3/4	UKF205D1;HE2305	3 3/4	2 3/4	5/8	1/2	1 1/16	15/32	1 25/64	1.378	1 3/16	3/8	UK205D1;HE2305
25	UKF206D1;H2306X	108	83	18	13	31	12	39	38	36	M10	UK206D1;H2306X
7/8	UKF206D1;HS2306	4 1/4	3 17/64	45/64	1/2	1 7/32	15/32	1 17/32	1.496	1 13/32	3/8	UK206D1;HS2306
1	UKF206D1;HE2306X											UK206D1;HE2306X
30	UKF207D1;H2307X	117	92	19	15	34	14	42.5	43	40	M12	UK207D1;H2307X
1 1/8	UKF207D1;HS2307	4 19/32	3 5/8	3/4	19/32	1 11/32	35/64	1 43/64	1.693	1 9/16	7/16	UK207D1;HS2307
35	UKF208D1;H2308X	130	102	21	15	36	16	46.5	46	46	M14	UK208D1;H2308X
1 1/4	UKF208D1;HE2308X	5 1/8	4 1/64	53/64	19/32	1 13/32	5/8	1 53/64	1.811	1 13/16	1/2	UK208D1;HE2308X
1 3/8	UKF208D1;HS2308X											UK208D1;HS2308X
40	UKF209D1;H2309X	137	105	22	16	38	16	48.5	50	52	M14	UK209D1;H2309X
1 7/16	UKF209D1;HA2309											UK209D1;HA2309
1 1/2	UKF209D1;HE2309X	5 13/32	4 9/64	55/64	5/8	1 1/2	5/8	1 29/32	1.969	2 1/16	1/2	UK209D1;HE2309X
1 5/8	UKF209D1;HS2309X											UK209D1;HS2309X
45	UKF210D1;H2310X	143	111	22	16	40	16	50	55	57	M14	UK210D1;H2310X
1 5/8	UKF210D1;HS2310											UK210D1;HS2310
1 11/16	UKF210D1;HA2310	5 5/8	4 3/8	55/64	5/8	1 9/16	5/8	1 31/32	2.165	2 1/4	1/2	UK210D1;HA2310
1 3/4	UKF210D1;HE2310X											UK210D1;HE2310X
50	UKF211D1;H2311X	162	130	25	18	43	19	54.5	59	64	M16	UK211D1;H2311X
1 7/8	UKF211D1;HS2311											UK211D1;HS2311
1 15/16	UKF211D1;HA2311	6 3/8	5 1/8	63/64	23/32	1 11/16	3/4	2 9/64	2.323	2 17/32	5/8	UK211D1;HA2311
2	UKF211D1;HE2311XY											UK211D1;HE2311XY
55	UKF212D1;H2312X	175	143	29	18	48	19	61	62	69	M16	UK212D1;H2312X
2 1/8	UKF212D1;HS2312	6 7/8	5 5/8	1 9/64	23/32	1 7/8	3/4	2 13/32	2.441	2 23/32	5/8	UK212D1;HS2312
60	UKF213D1;H2313X	187	149	30	22	50	19	64	65	74	M16	UK213D1;H2313X
2 3/16	UKF213D1;HA2313											UK213D1;HA2313
2 1/4	UKF213D1;HE2313X	7 3/8	5 55/64	1 3/16	7/8	1 31/32	3/4	2 33/64	2.559	2 29/32	5/8	UK213D1;HE2313X
2 3/8	UKF213D1;HS2313X											UK213D1;HS2313X

Remarks: 1) These numbers indicate relubricatable type. If maintenance free type is needed, please order without suffix "D1".
2) Adapter number with suffix "X" means a narrow slot type adapter sleeve.
In this case the lock washer with the straight inner prong should be used.
3) For HE2311XY, screw thread pitch different from the standard is applied, because of the thin thread section of sleeve.
To distinguish it, a suffix "Y" is added.
4) If the inch series housing units with dust cover are ordered with a closed end, the suffixes E, S or A are not included.
Example: SM-UKF205D1; HE2305

Note: Please refer to page 36 for size of grease fitting.

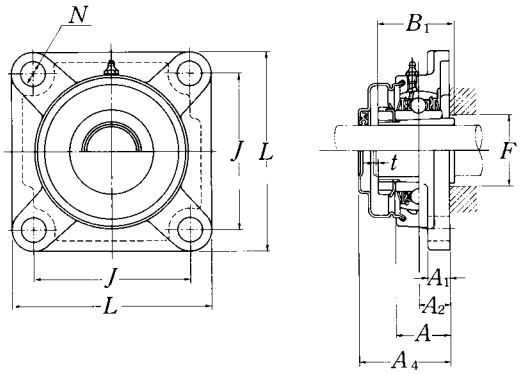

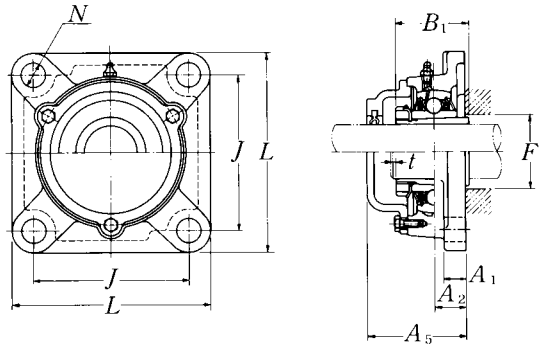

Pressed steel dust cover type
Open end: **S-UKF···D1**
Closed end: **SM-UKF···D1**

Cast dust cover type
Open end: **C-UKF···D1**
Closed end: **CM-UKF···D1**

Housing[1)] number	Unit number [1) 2) 3) 4)] pressed steel dust cover type	Unit number [1) 2) 3) 4)] cast dust cover type	Nominal dimensions mm / inch t max.	A_4	A_5	Mass of unit kg / lb UKF	S(SM)	C(CM)
F205D1	S(SM)-UKF205D1;H2305X	C(CM)-UKF205D1;H2305X	2	44.5	51	0.8	0.8	1.0
F205D1	S(SM)-UKF205ED1;HE2305	C(CM)-UKF205ED1;HE2305	5/64	1 3/4	2	1.8	1.8	2.2
F206D1	S(SM)-UKF206D1;H2306X	C(CM)-UKF206D1;H2306X	2	49	56	1.1	1.1	1.3
F206D1	S(SM)-UKF206SD1;HS2306	C(CM)-UKF206SD1;HS2306	5/64	1 15/16	2 7/32	2.4	2.4	2.9
F206D1	S(SM)-UKF206ED1;HE2306X	C(CM)-UKF206ED1;HE2306X						
F207D1	S(SM)-UKF207D1;H2307X	C(CM)-UKF207D1;H2307X	3	55	59	1.6	1.6	1.9
F207D1	S(SM)-UKF207SD1;HS2307	C(CM)-UKF207SD1;HS2307	1/8	2 5/32	2 5/16	3.3	3.5	4.2
F208D1	S(SM)-UKF208D1;H2308X	C(CM)-UKF208D1;H2308X	3	62	66	1.8	1.9	2.4
F208D1	S(SM)-UKF208ED1;HE2308X	C(CM)-UKF208ED1;HE2308X	1/8	2 7/16	2 19/32	4.0	4.2	5.3
F208D1	S(SM)-UKF208SD1;HS2308X	C(CM)-UKF208SD1;HS2308X						
F209D1	S(SM)-UKF209D1;H2309X	C(CM)-UKF209D1;H2309X	3	63	70	2.3	2.3	2.8
F209D1	S(SM)-UKF209AD1;HA2309	C(CM)-UKF209AD1;HA2309						
F209D1	S(SM)-UKF209ED1;HE2309X	C(CM)-UKF209ED1;HE2309X	1/8	2 15/32	2 3/4	5.1	5.1	6.2
F209D1	S(SM)-UKF209SD1;HS2309X	C(CM)-UKF209SD1;HS2309X						
F210D1	S(SM)-UKF210D1;H2310X	C(CM)-UKF210D1;H2310X	3	65.5	72	2.6	2.7	3.2
F210D1	S(SM)-UKF210SD1;HS2310	C(CM)-UKF210SD1;HS2310						
F210D1	S(SM)-UKF210AD1;HA2310	C(CM)-UKF210AD1;HA2310	1/8	2 19/32	2 27/32	5.7	6.0	7.1
F210D1	S(SM)-UKF210ED1;HE2310X	C(CM)-UKF210ED1;HE2310X						
F211D1	S(SM)-UKF211D1;H2311X	C(CM)-UKF211D1;H2311X	4	71	75	3.5	3.6	4.3
F211D1	S(SM)-UKF211SD1;HS2311	C(CM)-UKF211SD1;HS2311						
F211D1	S(SM)-UKF211AD1;HA2311	C(CM)-UKF211AD1;HA2311	5/32	2 25/32	2 15/16	7.7	7.9	9.5
F211D1	S(SM)-UKF211ED1;HE2311XY	C(CM)-UKF211ED1;HE2311XY						
F212D1	S(SM)-UKF212D1;H2312X	C(CM)-UKF212D1;H2312X	4	80	86	4.0	4.2	5.0
F212D1	S(SM)-UKF212SD1;HS2312	C(CM)-UKF212SD1;HS2312	5/32	3 5/32	3 3/8	8.8	9.3	11
F213D1	S(SM)-UKF213D1;H2313X	C(CM)-UKF213D1;H2313X	4	83.5	90	5.6	5.8	6.7
F213D1	S(SM)-UKF213AD1;HA2313	C(CM)-UKF213AD1;HA2313						
F213D1	S(SM)-UKF213ED1;HE2313X	C(CM)-UKF213ED1;HE2313X	5/32	3 5/16	3 17/32	12	13	15
F213D1	S(SM)-UKF213SD1;HS2313X	C(CM)-UKF213SD1;HS2313X						

Square flanged units cast housing
Adapter type

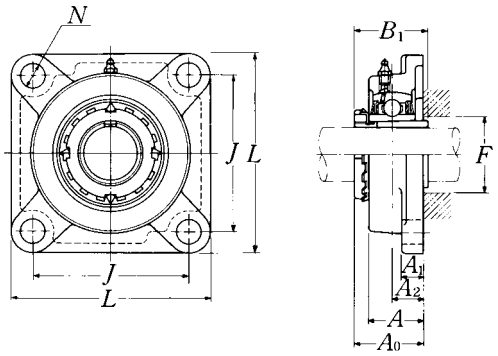

Shaft dia. mm / inch	Unit number 1) 2) 3)	Nominal dimensions mm / inch L	J	A2	A1	A	N	A0	B1	F min.	Bolt size mm / inch	Bearing number 2) 3)
65	UKF215D1;H2315X	200	159	34	22	56	19	71	73	84	M16	UK215D1;H2315X
2 7/16	UKF215D1;HA2315	7 7/8	6 17/64	1 11/32	7/8	2 7/32	3/4	2 51/64	2.874	3 5/16	5/8	UK215D1;HA2315
2 1/2	UKF215D1;HE2315X											UK215D1;HE2315X
70	UKF216D1;H2316X	208	165	34	22	58	23	73.5	78	90	M20	UK216D1;H2316X
2 11/16	UKF216D1;HA2316	8 3/16	6 1/2	1 11/32	7/8	2 9/32	29/32	2 57/64	3.071	3 17/32	3/4	UK216D1;HA2316
2 3/4	UKF216D1;HE2316X											UK216D1;HE2316X
75	UKF217D1;H2317X	220	175	36	24	63	23	77	82	95	M20	UK217D1;H2317X
2 15/16	UKF217D1;HA2317X	8 21/32	6 57/64	1 27/64	15/16	2 15/32	29/32	3 1/32	3.228	3 3/4	3/4	UK217D1;HA2317X
3	UKF217D1;HE2317X											UK217D1;HE2317X
80	UKF218D1;H2318X	235	187	40	24	68	23	81.5	86	102	M20	UK218D1;H2318X
3 3/16	UKF218D1;HA2318X	9 1/4	7 23/64	1 37/64	15/16	2 11/16	29/32	3 13/64	3.386	4 1/32	3/4	UK218D1;HA2318X

Remarks: 1) These numbers indicate relubricatable type. If maintenance free type is needed, please order without suffix "D1".
2) Adapter number with suffix "X" means a narrow slot type adapter sleeve.
In this case the lock washer with the straight inner prong should be used.
3) For HE2311XY, screw thread pitch different from the standard is applied, because of the thin thread section of sleeve.
To distinguish it, a suffix "Y" is added.
4) If the inch series housing units with dust cover are ordered with a closed end, the suffixes E, S or A are not included.
Example: SM-UKF205D1; HE2305

Note: Please refer to page 36 for size of grease fitting.

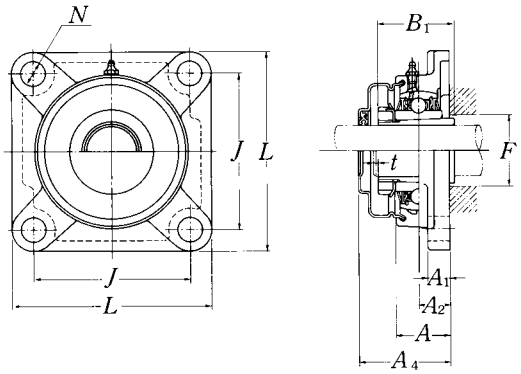

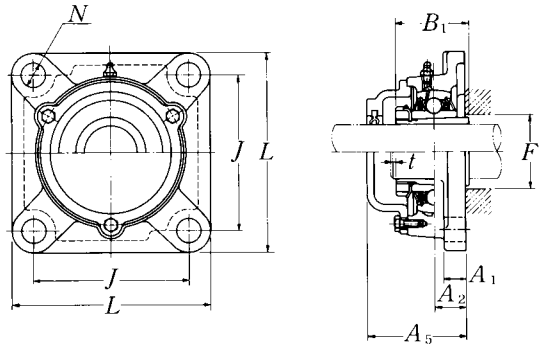

Pressed steel dust cover type
Open end: **S-UKF···D1**
Closed end: **SM-UKF···D1**

Cast dust cover type
Open end: **C-UKF···D1**
Closed end: **CM-UKF···D1**

Housing[1)] number	Unit number [1) 2) 3) 4)] pressed steel dust cover type	Unit number [1) 2) 3) 4)] cast dust cover type	Nominal dimensions mm t max.	A_4	inch A_5	Mass of unit kg UKF	S(SM)	lb C(CM)
F215D1	—	C(CM)-UKF215D1;H2315X	4	—	102	6.8	—	8.3
F215D1	—	C(CM)-UKF215AD1;HA2315	5/32	—	4 1/32	15	—	18
F215D1		C(CM)-UKF215ED1;HE2315X						
F216D1	—	C(CM)-UKF216D1;H2316X	4	—	106	8.3	—	10
F216D1	—	C(CM)-UKF216AD1;HA2316	5/32	—	4 3/16	18	—	22
F216D1		C(CM)-UKF216ED1;HE2316X						
F217D1	—	C(CM)-UKF217D1;H2317X	5	—	114	10	—	13
F217D1	—	C(CM)-UKF217AD1;HA2317X	13/64	—	4 1/2	22	—	29
F217D1		C(CM)-UKF217ED1;HE2317X						
F218D1	—	C(CM)-UKF218D1;H2318X	5	—	122	12	—	14
F218D1	—	C(CM)-UKF218AD1;HA2318X	13/64	—	4 13/16	26	—	31

Square flanged units cast housing
Adapter type

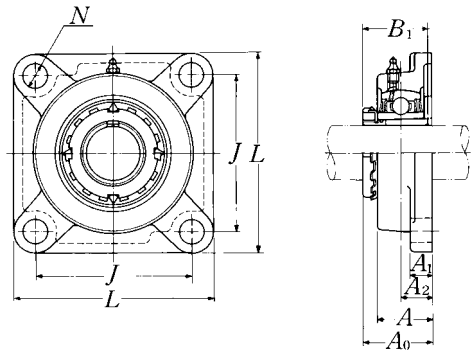

Shaft dia. mm / inch	Unit number 1) 2) 3)	Nominal dimensions mm / inch L	J	A2	A1	A	N	A0	B1	Bolt size mm / inch	Bearing number 2) 3)
20	UKF305D1;H2305X	110	80	16	13	29	16	37	35	M14	UK305D1;H2305X
3/4	UKF305D1;HE2305	4 11/32	3 5/32	5/8	1/2	1 5/32	5/8	1 29/64	1.378	1/2	UK305D1;HE2305
25	UKF306D1;H2306X	125	95	18	15	32	16	40.5	38	M14	UK306D1;H2306X
7/8	UKF306D1;HS2306	4 29/32	3 47/64	45/64	19/32	1 1/4	5/8	1 19/32	1.496	1/2	UK306D1;HS2306
1	UKF306D1;HE2306X										UK306D1;HE2306X
30	UKF307D1;H2307X	135	100	20	16	36	19	45.5	43	M16	UK307D1;H2307X
1 1/8	UKF307D1;HS2307	5 5/16	3 15/16	25/32	5/8	1 13/32	3/4	1 51/64	1.693	5/8	UK307D1;HS2307
35	UKF308D1;H2308X	150	112	23	17	40	19	50	46	M16	UK308D1;H2308X
1 1/4	UKF308D1;HE2308X	5 29/32	4 13/32	29/32	21/32	1 9/16	3/4	1 31/32	1.811	5/8	UK308D1;HE2308X
1 3/8	UKF308D1;HS2308X										UK308D1;HS2308X
40	UKF309D1;H2309X	160	125	25	18	44	19	54.5	50	M16	UK309D1;H2309X
1 7/16	UKF309D1;HA2309										UK309D1;HA2309
1 1/2	UKF309D1;HE2309X	6 5/16	4 59/64	63/64	23/32	1 23/32	3/4	2 9/64	1.969	5/8	UK309D1;HE2309X
1 5/8	UKF309D1;HS2309X										UK309D1;HS2309X
45	UKF310D1;H2310X	175	132	28	19	48	23	60.5	55	M20	UK310D1;H2310X
1 5/8	UKF310D1;HS2310										UK310D1;HS2310
1 11/16	UKF310D1;HA2310	6 7/8	5 13/64	1 7/64	3/4	1 7/8	29/32	2 3/8	2.165	3/4	UK310D1;HA2310
1 3/4	UKF310D1;HE2310X										UK310D1;HE2310X
50	UKF311D1;H2311X	185	140	30	20	52	23	64	59	M20	UK311D1;H2311X
1 7/8	UKF311D1;HS2311										UK311D1;HS2311
1 15/16	UKF311D1;HA2311	7 9/32	5 33/64	1 3/16	25/32	2 1/16	29/32	2 33/64	2.323	3/4	UK311D1;HA2311
2	UKF311D1;HE2311XY										UK311D1;HE2311XY
55	UKF312D1;H2312X	195	150	33	22	56	23	69.5	62	M20	UK312D1;H2312X
2 1/8	UKF312D1;HS2312	7 11/16	5 29/32	1 19/64	7/8	2 7/32	29/32	2 47/64	2.441	3/4	UK312D1;HS2312
60	UKF313D1;H2313X	208	166	33	22	58	23	71.5	65	M20	UK313D1;H2313X
2 3/16	UKF313D1;HA2313										UK313D1;HA2313
2 1/4	UKF313D1;HE2313X	8 3/16	6 17/32	1 19/64	7/8	2 9/32	29/32	2 13/16	2.559	3/4	UK313D1;HE2313X
2 3/8	UKF313D1;HS2313X										UK313D1;HS2313X

Remarks: 1) These numbers indicate relubricatable type. If maintenance free type is needed, please order without suffix "D1".
2) Adapter number with suffix "X" means a narrow slot type adapter sleeve.
In this case the lock washer with the straight inner prong should be used.
3) For HE2311XY, screw thread pitch different from the standard is applied, because of the thin thread section of sleeve.
To distinguish it, a suffix "Y" is added.
4) If the inch series housing units with dust cover are ordered with a closed end, the suffixes E, S or A are not included.
Example: CM-UKF305D1; HE2305

Note: Please refer to page 36 for size of grease fitting.

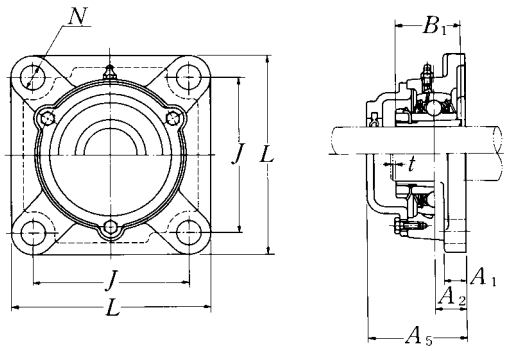

Cast dust cover type
Open end: **C-UKF···D1**
Closed end: **CM-UKF···D1**

Housing number 1)	Unit number 1) 2) 3) 4) cast dust cover type	Nominal dimensions mm t max.	Nominal dimensions inch A_5	Mass of unit kg UKF	Mass of unit lb C(CM)
F305D1	C(CM)-UKF305D1;H2305X	2	56	1.1	1.5
F305D1	C(CM)-UKF305ED1;HE2305	5/64	2 7/32	2.4	3.3
F306D1	C(CM)-UKF306D1;H2306X	2	60	1.7	2.1
F306D1	C(CM)-UKF306SD1;HS2306	5/64	2 3/8	3.8	4.6
F306D1	C(CM)-UKF306ED1;HE2306X				
F307D1	C(CM)-UKF307D1;H2307X	3	68	2.1	2.7
F307D1	C(CM)-UKF307SD1;HS2307	1/8	2 11/16	4.6	6.0
F308D1	C(CM)-UKF308D1;H2308X	3	76	2.8	3.5
F308D1	C(CM)-UKF308ED1;HE2308X	1/8	3	6.2	7.7
F308D1	C(CM)-UKF308SD1;HS2308X				
F309D1	C(CM)-UKF309D1;H2309X	3	80	3.4	4.4
F309D1	C(CM)-UKF309AD1;HA2309				
F309D1	C(CM)-UKF309ED1;HE2309X	1/8	3 5/32	7.5	9.7
F309D1	C(CM)-UKF309SD1;HS2309X				
F310D1	C(CM)-UKF310D1;H2310X	3	88	4.5	5.9
F310D1	C(CM)-UKF310SD1;HS2310				
F310D1	C(CM)-UKF310AD1;HA2310	1/8	3 15/32	9.9	13
F310D1	C(CM)-UKF310ED1;HE2310X				
F311D1	C(CM)-UKF311D1;H2311X	4	92	5.3	6.8
F311D1	C(CM)-UKF311SD1;HS2311				
F311D1	C(CM)-UKF311AD1;HA2311	5/32	3 5/8	12	15
F311D1	C(CM)-UKF311ED1;HE2311XY				
F312D1	C(CM)-UKF312D1;H2312X	4	100	6.3	7.9
F312D1	C(CM)-UKF312SD1;HS2312	5/32	3 15/16	14	17
F313D1	C(CM)-UKF313D1;H2313X	4	103	7.8	9.6
F313D1	C(CM)-UKF313AD1;HA2313				
F313D1	C(CM)-UKF313ED1;HE2313X	5/32	4 1/16	17	21
F313D1	C(CM)-UKF313SD1;HS2313X				

Square flanged units cast housing
Adapter type

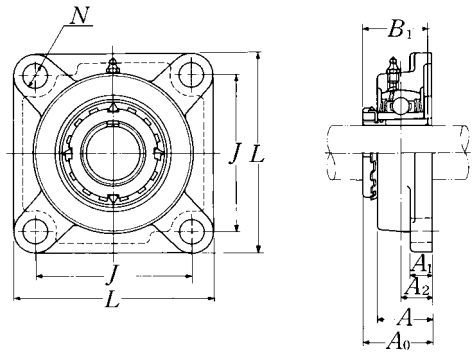

Shaft dia. mm / inch	Unit number 1) 2) 3)	Nominal dimensions mm / inch L	J	A2	A1	A	N	A0	B1	Bolt size mm / inch	Bearing number 2) 3)
65 2 7/16 2 1/2	UKF315D1;H2315X UKF315D1;HA2315 UKF315D1;HE2315X	236 9 9/32	184 7 1/4	39 1 17/32	25 31/32	66 2 19/32	25 63/64	81.5 3 13/64	73 2.874	M22 7/8	UK315D1;H2315X UK315D1;HA2315 UK315D1;HE2315X
70 2 11/16 2 3/4	UKF316D1;H2316X UKF316D1;HA2316 UKF316D1;HE2316X	250 9 27/32	196 7 23/32	38 1 1/2	27 1 1/16	68 2 11/16	31 1 7/32	84 3 5/16	78 3.071	M27 1	UK316D1;H2316X UK316D1;HA2316 UK316D1;HE2316X
75 2 15/16 3	UKF317D1;H2317X UKF317D1;HA2317X UKF317D1;HE2317X	260 10 1/4	204 8 1/32	44 1 47/64	27 1 1/16	74 2 29/32	31 1 7/32	92 3 5/8	82 3.228	M27 1	UK317D1;H2317X UK317D1;HA2317X UK317D1;HE2317X
80 3 3/16	UKF318D1;H2318X UKF318D1;HA2318X	280 11 1/32	216 8 1/2	44 1 47/64	30 1 3/16	76 3	35 1 3/8	94 3 45/64	86 3.386	M30 1 1/8	UK318D1;H2318X UK318D1;HA2318X
85 3 1/4	UKF319D1;H2319X UKF319D1;HE2319X	290 11 13/32	228 8 31/32	59 2 21/64	30 1 3/16	94 3 11/16	35 1 3/8	111.5 4 25/64	90 3.543	M30 1 1/8	UK319D1;H2319X UK319D1;HE2319X
90 3 7/16 3 1/2	UKF320D1;H2320X UKF320D1;HA2320 UKF320D1;HE2320X	310 12 7/32	242 9 17/32	59 2 21/64	32 1 1/4	94 3 11/16	38 1 1/2	115.5 4 35/64	97 3.819	M33 1 1/4	UK320D1;H2320X UK320D1;HA2320 UK320D1;HE2320X
100	UKF322D1;H2322X	340	266	60	35	96	41	121	105	M36	UK322D1;H2322X
110	UKF324D1;H2324X	370	290	65	40	110	41	130	112	M36	UK324D1;H2324X
115	UKF326D1;H2326	410	320	65	45	115	41	133	121	M36	UK326D1;H2326
125	UKF328D1;H2328	450	350	75	55	125	41	146.5	131	M36	UK328D1;H2328

Remarks: 1) These numbers indicate relubricatable type. If maintenance free type is needed, please order without suffix "D1".
2) Adapter number with suffix "X" means a narrow slot type adapter sleeve.
In this case the lock washer with the straight inner prong should be used.
3) For HE2311XY, screw thread pitch different from the standard is applied, because of the thin thread section of sleeve.
To distinguish it, a suffix "Y" is added.
4) If the inch series housing units with dust cover are ordered with a closed end, the suffixes E, S or A are not included.
Example: CM-UKF305D1; HE2305

Note: Please refer to page 36 for size of grease fitting.

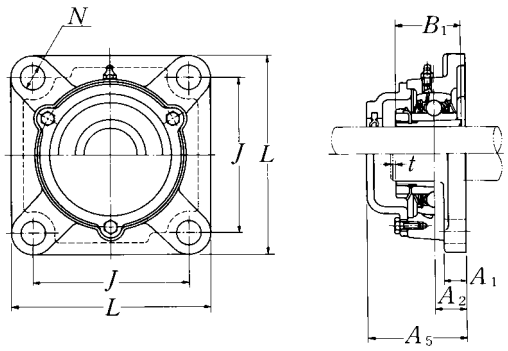

Cast dust cover type
Open end: **C-UKF···D1**
Closed end: **CM-UKF···D1**

Housing number 1)	Unit number 1) 2) 3) 4) cast dust cover type	Nominal dimensions mm t max.	Nominal dimensions inch A_5	Mass of unit kg UKF	Mass of unit lb C(CM)
F315D1	C(CM)-UKF315D1;H2315X	4	114	11	13
F315D1	C(CM)-UKF315AD1;HA2315	5/32	4 1/2	24	29
F315D1	C(CM)-UKF315ED1;HE2315X				
F316D1	C(CM)-UKF316D1;H2316X	4	116	14	16
F316D1	C(CM)-UKF316AD1;HA2316	5/32	4 9/16	31	35
F316D1	C(CM)-UKF316ED1;HE2316X				
F317D1	C(CM)-UKF317D1;H2317X	5	129	15	19
F317D1	C(CM)-UKF317AD1;HA2317X	13/64	5 3/32	33	42
F317D1	C(CM)-UKF317ED1;HE2317X				
F318D1	C(CM)-UKF318D1;H2318X	5	129	19	23
F318D1	C(CM)-UKF318AD1;HA2318X	13/64	5 3/32	42	51
F319D1	C(CM)-UKF319D1;H2319X	5	149	22	26
F319D1	C(CM)-UKF319ED1;HE2319X	13/64	5 7/8	49	57
F320D1	C(CM)-UKF320D1;H2320X	5	154	27	32
F320D1	C(CM)-UKF320AD1;HA2320	13/64	6 1/16	60	71
F320D1	C(CM)-UKF320ED1;HE2320X				
F322D1	C(CM)-UKF322D1;H2322X	5	160	35	41
F324D1	C(CM)-UKF324D1;H2324X	5	172	48	56
F326D1	C(CM)-UKF326D1;H2326	6	178	63	75
F328D1	C(CM)-UKF328D1;H2328	6	192	90	101

Square flanged units cast housing
Adapter type

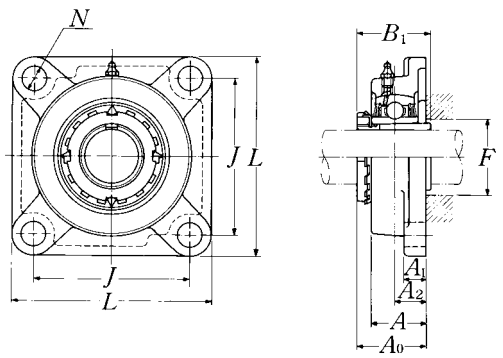

Shaft dia. mm / inch	Unit number 1) 2) 3)	Nominal dimensions mm / inch L	J	A2	A1	A	N	A0	B1	F min.	Bolt size mm / inch	Bearing number 2) 3)
20	UKFX05D1;H2305X	108	83	18	13	30	12	39	35	30	M10	UKX05D1;H2305X
3/4	UKFX05D1;HE2305	4 1/4	3 17/64	45/64	1/2	1 3/16	15/32	1 17/32	1.378	1 3/16	3/8	UKX05D1;HE2305
25	UKFX06D1;H2306X	117	92	19	14	34	16	41.5	38	36	M14	UKX06D1;H2306X
7/8	UKFX06D1;HS2306	4 19/32	3 5/8	3/4	9/16	1 11/32	5/8	1 41/64	1.496	1 13/32	1/2	UKX06D1;HS2306
1	UKFX06D1;HE2306X											UKX06D1;HE2306X
30	UKFX07D1;H2307X	130	102	21	14	38	16	45.5	43	40	M14	UKX07D1;H2307X
1 1/8	UKFX07D1;HS2307	5 1/8	4 1/64	53/64	9/16	1 1/2	5/8	1 51/64	1.693	1 9/16	1/2	UKX07D1;HS2307
35	UKFX08D1;H2308X	137	105	22	14	40	19	47.5	46	46	M16	UKX08D1;H2308X
1 1/4	UKFX08D1;HE2308X	5 13/32	4 9/64	55/64	9/16	1 9/16	3/4	1 7/8	1.811	1 13/16	5/8	UKX08D1;HE2308X
1 3/8	UKFX08D1;HS2308X											UKX08D1;HS2308X
40	UKFX09D1;H2309X	143	111	23	14	40	19	50	50	52	M16	UKX09D1;H2309X
1 7/16	UKFX09D1;HA2309											UKX09D1;HA2309
1 1/2	UKFX09D1;HE2309X	5 5/8	4 3/8	29/32	9/16	1 9/16	3/4	1 31/32	1.969	2 1/16	5/8	UKX09D1;HE2309X
1 5/8	UKFX09D1;HS2309X											UKX09D1;HS2309X
45	UKFX10D1;H2310X	162	130	26	20	44	19	55.5	55	57	M16	UKX10D1;H2310X
1 5/8	UKFX10D1;HS2310											UKX10D1;HS2310
1 11/16	UKFX10D1;HA2310	6 3/8	5 1/8	1 1/32	25/32	1 23/32	3/4	2 3/16	2.165	2 1/4	5/8	UKX10D1;HA2310
1 3/4	UKFX10D1;HE2310X											UKX10D1;HE2310X
50	UKFX11D1;H2311X	175	143	29	20	49	19	60	59	64	M16	UKX11D1;H2311X
1 7/8	UKFX11D1;HS2311											UKX11D1;HS2311
1 15/16	UKFX11D1;HA2311	6 7/8	5 5/8	1 9/64	25/32	1 15/16	3/4	2 23/64	2.323	2 17/32	5/8	UKX11D1;HA2311
2	UKFX11D1;HE2311XY											UKX11D1;HE2311XY
55	UKFX12D1;H2312X	187	149	34	21	59	19	67	62	69	M16	UKX12D1;H2312X
2 1/8	UKFX12D1;HS2312	7 3/8	5 55/64	1 11/32	13/16	2 5/16	3/4	2 41/64	2.441	2 23/32	5/8	UKX12D1;HS2312
60	UKFX13D1;H2313X	187	149	34	21	59	19	69	65	74	M16	UKX13D1;H2313X
2 3/16	UKFX13D1;HA2313											UKX13D1;HA2313
2 1/4	UKFX13D1;HE2313X	7 3/8	5 55/64	1 11/32	13/16	2 5/16	3/4	2 23/32	2.559	2 29/32	5/8	UKX13D1;HE2313X
2 3/8	UKFX13D1;HS2313X											UKX13D1;HS2313X

Remarks: 1) These numbers indicate relubricatable type. If maintenance free type is needed, please order without suffix "D1".
2) Adapter number with suffix "X" means a narrow slot type adapter sleeve.
In this case the lock washer with the straight inner prong should be used.
3) For HE2311XY, screw thread pitch different from the standard is applied, because of the thin thread section of sleeve.
To distinguish it, a suffix "Y" is added.
4) If the inch series housing units with dust cover are ordered with a closed end, the suffixes E, S or A are not included.
Example: CM-UKFX05D1; HE2305

Note: Please refer to page 36 for size of grease fitting.

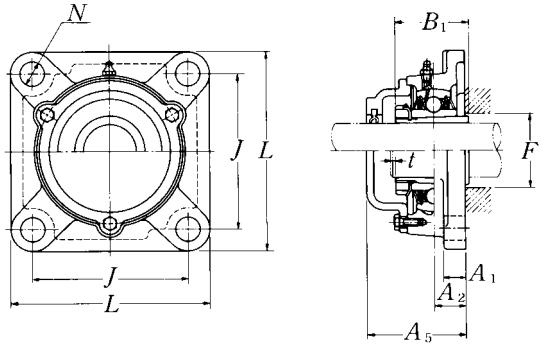

Cast dust cover type
Open end: **C-UKFX···D1**
Closed end: **CM-UKFX···D1**

Housing number [1]	Unit number [1) 2) 3) 4)] cast dust cover type	Nominal dimensions mm t	Nominal dimensions inch A_5	Mass of unit kg UKFX	Mass of unit lb C(CM)
FX05D1	C(CM)-UKFX05D1;H2305X	2	56	1.1	1.3
FX05D1	C(CM)-UKFX05ED1;HE2305	5/64	2 7/32	2.4	2.9
FX06D1	C(CM)-UKFX06D1;H2306X	2	59	1.6	1.8
FX06D1	C(CM)-UKFX06SD1;HS2306	5/64	2 5/16	3.5	4.0
FX06D1	C(CM)-UKFX06ED1;HE2306X				
FX07D1	C(CM)-UKFX07D1;H2307X	3	66	2.1	2.5
FX07D1	C(CM)-UKFX07SD1;HS2307	1/8	2 19/32	4.6	5.5
FX08D1	C(CM)-UKFX08D1;H2308X	3	70	2.5	2.9
FX08D1	C(CM)-UKFX08ED1;HE2308X	1/8	2 3/4	5.5	6.4
FX08D1	C(CM)-UKFX08SD1;HS2308X				
FX09D1	C(CM)-UKFX09D1;H2309X	3	73	2.5	3.0
FX09D1	C(CM)-UKFX09AD1;HA2309				
FX09D1	C(CM)-UKFX09ED1;HE2309X	1/8	2 7/8	5.5	6.6
FX09D1	C(CM)-UKFX09SD1;HS2309X				
FX10D1	C(CM)-UKFX10D1;H2310X	3	76	3.8	4.4
FX10D1	C(CM)-UKFX10SD1;HS2310				
FX10D1	C(CM)-UKFX10AD1;HA2310	1/8	3	8.4	9.7
FX10D1	C(CM)-UKFX10ED1;HE2310X				
FX11D1	C(CM)-UKFX11D1;H2311X	4	86	4.7	5.4
FX11D1	C(CM)-UKFX11SD1;HS2311				
FX11D1	C(CM)-UKFX11AD1;HA2311	5/32	3 3/8	10	12
FX11D1	C(CM)-UKFX11ED1;HE2311XY				
FX12D1	C(CM)-UKFX12D1;H2312X	4	94	6.4	7.2
FX12D1	C(CM)-UKFX12SD1;HS2312	5/32	3 11/16	14	16
FX13D1	C(CM)-UKFX13D1;H2313X	4	101	6.4	7.6
FX13D1	C(CM)-UKFX13AD1;HA2313				
FX13D1	C(CM)-UKFX13ED1;HE2313X	5/32	3 31/32	14	17
FX13D1	C(CM)-UKFX13SD1;HS2313X				

Square flanged units cast housing
Adapter type

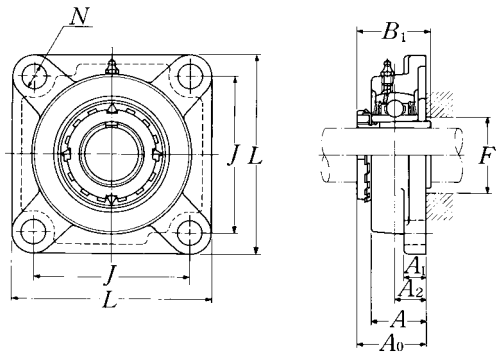

Shaft dia. mm / inch	Unit number [1) 2) 3)]	Nominal dimensions mm / inch: L	J	A2	A1	A	N	A0	B1	F min.	Bolt size mm / inch	Bearing number [2) 3)]
65 2 7/16 2 1/2	UKFX15D1;H2315X UKFX15D1;HA2315 UKFX15D1;HE2315X	197 7 3/4	152 5 63/64	40 1 37/64	24 15/16	68 2 11/16	23 29/32	77.5 3 3/64	73 2.874	84 3 5/16	M20 3/4	UKX15D1;H2315X UKX15D1;HA2315 UKX15D1;HE2315X
70 2 11/16 2 3/4	UKFX16D1;H2316X UKFX16D1;HA2316 UKFX16D1;HE2316X	214 8 7/16	171 6 47/64	40 1 37/64	24 15/16	70 2 3/4	23 29/32	80 3 5/32	78 3.071	90 3 17/32	M20 3/4	UKX16D1;H2316X UKX16D1;HA2316 UKX16D1;HE2316X
75 2 15/16 3	UKFX17D1;H2317X UKFX17D1;HA2317X UKFX17D1;HE2317X	214 8 7/16	171 6 47/64	40 1 37/64	24 15/16	70 2 3/4	23 29/32	81.5 3 13/64	82 3.228	95 3 3/4	M20 3/4	UKX17D1;H2317X UKX17D1;HA2317X UKX17D1;HE2317X
80 3 3/16	UKFX18D1;H2318X UKFX18D1;HA2318X	214 8 7/16	171 6 47/64	45 1 49/64	24 15/16	76 3	23 29/32	87.5 3 7/16	86 3.386	102 4 1/32	M20 3/4	UKX18D1;H2318X UKX18D1;HA2318X
90	UKFX20D1;H2320X	268	211	59	31	97	31	107.5	97	112	M27	UKX20D1;H2320X

Remarks: 1) These numbers indicate relubricatable type. If maintenance free type is needed, please order without suffix "D1".
2) Adapter number with suffix "X" means a narrow slot type adapter sleeve.
In this case the lock washer with the straight inner prong should be used.
3) For HE2311XY, screw thread pitch different from the standard is applied, because of the thin thread section of sleeve.
To distinguish it, a suffix "Y" is added.
4) If the inch series housing units with dust cover are ordered with a closed end, the suffixes E, S or A are not included.
Example: CM-UKFX05D1; HE2305

Note: Please refer to page 36 for size of grease fitting.

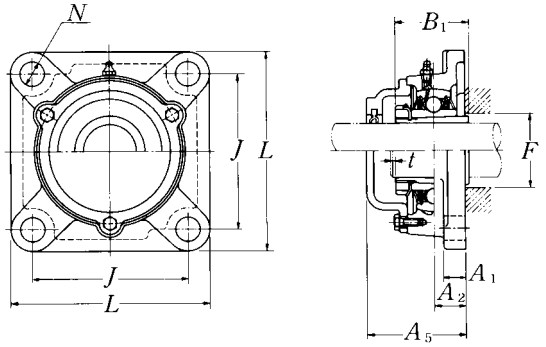

Cast dust cover type
Open end: **C-UKFX···D1**
Closed end: **CM-UKFX···D1**

Housing [1] number	Unit number [1) 2) 3) 4)] cast dust cover type	Nominal dimensions mm t	Nominal dimensions inch A_5	Mass of unit kg UKFX	Mass of unit lb C(CM)
FX15D1	C(CM)-UKFX15D1;H2315X	4	112	8.7	10
FX15D1	C(CM)-UKFX15AD1;HA2315	5/32	4 13/32	19	22
FX15D1	C(CM)-UKFX15ED1;HE2315X				
FX16D1	C(CM)-UKFX16D1;H2316X	4	118	11	12
FX16D1	C(CM)-UKFX16AD1;HA2316	5/32	4 21/32	24	26
FX16D1	C(CM)-UKFX16ED1;HE2316X				
FX17D1	C(CM)-UKFX17D1;H2317X	5	122	12	14
FX17D1	C(CM)-UKFX17AD1;HA2317X	13/64	4 13/16	26	31
FX17D1	C(CM)-UKFX17ED1;HE2317X				
FX18D1	C(CM)-UKFX18D1;H2318X	5	135	12	14
FX18D1	C(CM)-UKFX18AD1;HA2318X	13/64	5 5/16	26	31
FX20D1	C(CM)-UKFX20D1;H2320X	5	146.5	20	22

Square flanged units cast housing w/spigot joint
Adapter type

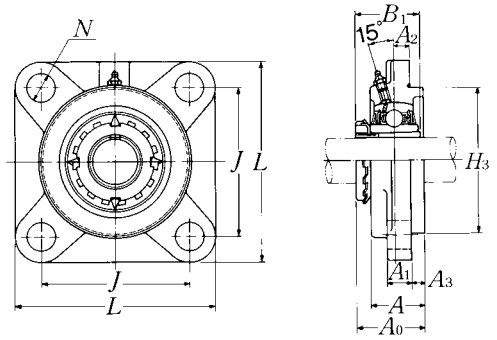

Shaft dia. mm / inch	Unit number 1) 2) 3)	Nominal dimensions mm / inch L	J	A2	N	A3	A1	A	H3	A0	B1	Bolt size mm / inch	Bearing number 2) 3)
20	UKFS305D1;H2305X	110	80	9	16	7	13	29	80	37	35	M14	UK305D1;H2305X
3/4	UKFS305D1;HE2305	4 11/32	3 5/32	23/64	5/8	9/32	1/2	1 9/64	3.1496	1 29/64	1.378	1/2	UK305D1;HE2305
25	UKFS306D1;H2306X	125	95	10	16	8	15	32	90	40.5	38	M14	UK306D1;H2306X
7/8	UKFS306D1;HS2306	4 29/32	3 47/64	25/64	5/8	5/16	19/32	1 17/64	3.5433	1 19/32	1.496	1/2	UK306D1;HS2306
1	UKFS306D1;HE2306X												UK306D1;HE2306X
30	UKFS307D1;H2307X	135	100	11	19	9	16	36	100	45.5	43	M16	UK307D1;H2307X
1 1/8	UKFS307D1;HS2307	5 5/16	3 15/16	7/16	3/4	23/64	5/8	1 13/32	3.9370	1 51/64	1.693	5/8	UK307D1;HS2307
35	UKFS308D1;H2308X	150	112	13	19	10	17	40	115	50	46	M16	UK308D1;H2308X
1 1/4	UKFS308D1;HE2308X	5 29/32	4 13/32	33/64	3/4	25/64	21/32	1 9/16	4.5276	1 31/32	1.811	5/8	UK308D1;HE2308X
1 3/8	UKFS308D1;HS2308X												UK308D1;HS2308X
40	UKFS309D1;H2309X	160	125	14	19	11	18	44	125	54.5	50	M16	UK309D1;H2309X
1 7/16	UKFS309D1;HA2309												UK309D1;HA2309
1 1/2	UKFS309D1;HE2309X	6 5/16	4 59/64	35/64	3/4	7/16	23/32	1 47/64	4.9213	2 9/64	1.969	5/8	UK309D1;HE2309X
1 5/8	UKFS309D1;HS2309X												UK309D1;HS2309X
45	UKFS310D1;H2310X	175	132	16	23	12	19	48	140	60.5	55	M20	UK310D1;H2310X
1 5/8	UKFS310D1;HS2310												UK310D1;HS2310
1 11/16	UKFS310D1;HA2310	6 7/8	5 13/64	5/8	29/32	15/32	3/4	1 57/64	5.5118	2 3/8	2.165	3/4	UK310D1;HA2310
1 3/4	UKFS310D1;HE2310X												UK310D1;HE2310X
50	UKFS311D1;H2311X	185	140	17	23	13	20	52	150	64	59	M20	UK311D1;H2311X
1 7/8	UKFS311D1;HS2311												UK311D1;HS2311
1 15/16	UKFS311D1;HA2311	7 9/32	5 33/64	43/64	29/32	33/64	25/32	2 3/64	5.9055	2 33/64	2.323	3/4	UK311D1;HA2311
2	UKFS311D1;HE2311XY												UK311D1;HE2311XY
55	UKFS312D1;H2312X	195	150	19	23	14	22	56	160	69.5	62	M20	UK312D1;H2312X
2 1/8	UKFS312D1;HS2312	7 11/16	5 29/32	3/4	29/32	35/64	7/8	2 13/64	6.2992	2 47/64	2.441	3/4	UK312D1;HS2312
60	UKFS313D1;H2313X	208	166	15	23	18	22	58	175	71.5	65	M20	UK313D1;H2313X
2 3/16	UKFS313D1;HA2313												UK313D1;HA2313
2 1/4	UKFS313D1;HE2313X	8 3/16	6 17/32	19/32	29/32	45/64	7/8	2 9/32	6.8898	2 13/16	2.559	3/4	UK313D1;HE2313X
2 3/8	UKFS313D1;HS2313X												UK313D1;HS2313X

Remarks: 1) These numbers indicate relubricatable type. If maintenance free type is needed, please order without suffix "D1".
2) Adapter number with suffix "X" means a narrow slot type adapter sleeve.
In this case the lock washer with the straight inner prong should be used.
3) For HE2311XY, screw thread pitch different from the standard is applied, because of the thin thread section of sleeve.
To distinguish it, a suffix "Y" is added.
4) If the inch series housing units with dust cover are ordered with a closed end, the suffixes E, S or A are not included.
Example: CM-UKFS305D1; HE2305

Note: Please refer to page 36 for size of grease fitting.

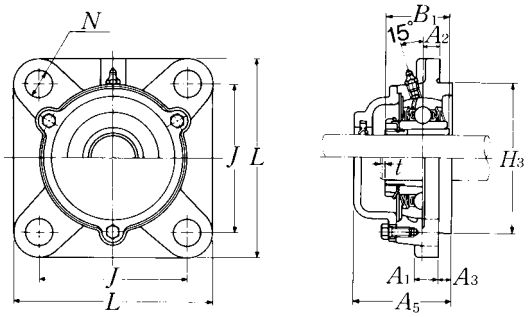

Cast dust cover type
Open end: **C-UKFS···D1**
Closed end: **CM-UKFS···D1**

Housing [1] number	Unit number [1) 2) 3) 4)] cast dust cover type	Nominal dimensions mm t max.	Nominal dimensions inch A_5	Mass of unit kg UKFS	Mass of unit lb C(CM)
FS305D1	C(CM)-UKFS305D1;H2305X	2	56	1.2	1.5
FS305D1	C(CM)-UKFS305ED1;HE2305	5/64	2 13/64	2.7	3.3
FS306D1	C(CM)-UKFS306D1;H2306X	2	60	1.8	2.2
FS306D1	C(CM)-UKFS306SD1;HS2306	5/64	2 23/64	4.0	4.9
FS306D1	C(CM)-UKFS306ED1;HE2306X				
FS307D1	C(CM)-UKFS307D1;H2307X	3	67	2.3	2.9
FS307D1	C(CM)-UKFS307SD1;HS2307	1/8	2 41/64	5.1	6.4
FS308D1	C(CM)-UKFS308D1;H2308X	3	76	3.2	3.7
FS308D1	C(CM)-UKFS308ED1;HE2308X	1/8	2 63/64	7.1	8.2
FS308D1	C(CM)-UKFS308SD1;HS2308X				
FS309D1	C(CM)-UKFS309D1;H2309X	3	80	3.8	4.7
FS309D1	C(CM)-UKFS309AD1;HA2309				
FS309D1	C(CM)-UKFS309ED1;HE2309X	1/8	3 5/32	8.4	10
FS309D1	C(CM)-UKFS309SD1;HS2309X				
FS310D1	C(CM)-UKFS310D1;H2310X	3	88	5.1	6.3
FS310D1	C(CM)-UKFS310SD1;HS2310				
FS310D1	C(CM)-UKFS310AD1;HA2310	1/8	3 15/32	11	14
FS310D1	C(CM)-UKFS310ED1;HE2310X				
FS311D1	C(CM)-UKFS311D1;H2311X	4	93	5.9	7.3
FS311D1	C(CM)-UKFS311SD1;HS2311				
FS311D1	C(CM)-UKFS311AD1;HA2311	5/32	3 21/32	13	16
FS311D1	C(CM)-UKFS311ED1;HE2311XY				
FS312D1	C(CM)-UKFS312D1;H2312X	4	100	7.0	8.4
FS312D1	C(CM)-UKFS312SD1;HS2312	5/32	3 15/16	15	19
FS313D1	C(CM)-UKFS313D1;H2313X	4	103	8.4	10
FS313D1	C(CM)-UKFS313AD1;HA2313				
FS313D1	C(CM)-UKFS313ED1;HE2313X	5/32	4 1/16	19	22
FS313D1	C(CM)-UKFS313SD1;HS2313X				

Square flanged units cast housing w/spigot joint
Adapter type

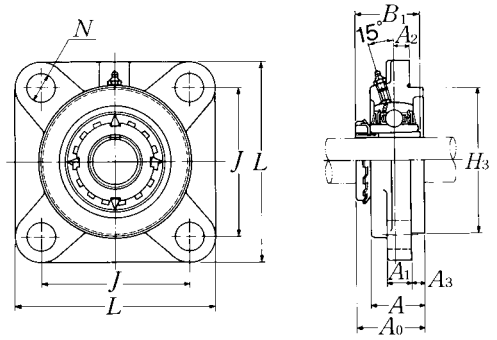

Shaft dia. mm / inch	Unit number 1) 2) 3)	Nominal dimensions mm / inch L	J	A2	N	A3	A1	A	H3	A0	B1	Bolt size mm / inch	Bearing number 2) 3)
65	UKFS315D1;H2315X	236	184	21	25	18	25	66	200	81.5	73	M22	UK315D1;H2315X
2 7/16	UKFS315D1;HA2315	9 9/32	7 1/4	53/64	63/64	45/64	31/32	2 19/32	7.8740	3 13/64	2.874	7/8	UK315D1;HA2315
2 1/2	UKFS315D1;HE2315X												UK315D1;HE2315X
70	UKFS316D1;H2316X	250	196	18	31	20	27	68	210	84	78	M27	UK316D1;H2316X
2 11/16	UKFS316D1;HA2316	9 27/32	7 23/32	45/64	1 7/32	25/32	1 1/16	2 43/64	8.2677	3 5/16	3.071	1	UK316D1;HA2316
2 3/4	UKFS316D1;HE2316X												UK316D1;HE2316X
75	UKFS317D1;H2317X	260	204	24	31	20	27	74	220	92	82	M27	UK317D1;H2317X
2 15/16	UKFS317D1;HA2317X	10 1/4	8 1/32	15/16	1 7/32	25/32	1 1/16	2 29/32	8.6614	3 5/8	3.228	1	UK317D1;HA2317X
3	UKFS317D1;HE2317X												UK317D1;HE2317X
80	UKFS318D1;H2318X	280	216	24	35	20	30	76	240	94	86	M30	UK318D1;H2318X
3 3/16	UKFS318D1;HA2318X	11 1/32	8 1/2	15/16	1 3/8	25/32	1 3/16	2 63/64	9.4488	3 45/64	3.386	1 1/8	UK318D1;HA2318X
85	UKFS319D1;H2319X	290	228	39	35	20	30	94	250	111.5	90	M30	UK319D1;H2319X
3 1/4	UKFS319D1;HE2319X	11 13/32	8 31/32	1 17/32	1 3/8	25/32	1 3/16	3 45/64	9.8425	4 25/64	3.543	1 1/8	UK319D1;HE2319X
90	UKFS320D1;H2320X	310	242	39	38	20	32	94	260	115.5	97	M33	UK320D1;H2320X
3 7/16	UKFS320D1;HA2320	12 7/32	9 17/32	1 17/32	1 1/2	25/32	1 1/4	3 45/64	10.2362	4 35/64	3.819	1 1/4	UK320D1;HA2320
3 1/2	UKFS320D1;HE2320X												UK320D1;HE2320X
100	UKFS322D1;H2322X	340	266	35	41	25	35	96	300	121	105	M36	UK322D1;H2322X
110	UKFS324D1;H2324X	370	290	35	41	30	40	110	330	130	112	M36	UK324D1;H2324X
115	UKFS326D1;H2326	410	320	35	41	30	45	115	360	133	121	M36	UK326D1;H2326
125	UKFS328D1;H2328	450	350	45	41	30	55	125	400	146.5	131	M36	UK328D1;H2328

Remarks: 1) These numbers indicate relubricatable type. If maintenance free type is needed, please order without suffix "D1".
2) Adapter number with suffix "X" means a narrow slot type adapter sleeve.
In this case the lock washer with the straight inner prong should be used.
3) For HE2311XY, screw thread pitch different from the standard is applied, because of the thin thread section of sleeve.
To distinguish it, a suffix "Y" is added.
4) If the inch series housing units with dust cover are ordered with a closed end, the suffixes E, S or A are not included.
Example: CM-UKFS305D1; HE2305

Note: Please refer to page 36 for size of grease fitting.

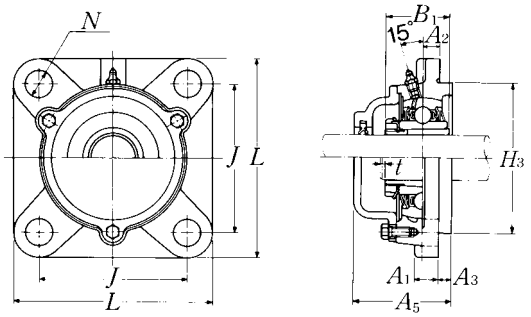

Cast dust cover type
Open end: **C-UKFS···D1**
Closed end: **CM-UKFS···D1**

Housing [1] number	Unit number [1) 2) 3) 4)] cast dust cover type	Nominal dimensions mm t max.	Nominal dimensions inch A_5	Mass of unit kg UKFS	Mass of unit lb C(CM)
FS315D1	C(CM)-UKFS315D1;H2315X	4	114	12	14
FS315D1	C(CM)-UKFS315AD1;HA2315	5/32	4 31/64	26	31
FS315D1	C(CM)-UKFS315ED1;HE2315X				
FS316D1	C(CM)-UKFS316D1;H2316X	4	116	15	17
FS316D1	C(CM)-UKFS316AD1;HA2316	5/32	4 9/16	33	37
FS316D1	C(CM)-UKFS316ED1;HE2316X				
FS317D1	C(CM)-UKFS317D1;H2317X	5	129	17	20
FS317D1	C(CM)-UKFS317AD1;HA2317X	13/64	5 5/64	37	44
FS317D1	C(CM)-UKFS317ED1;HE2317X				
FS318D1	C(CM)-UKFS318D1;H2318X	5	129	21	24
FS318D1	C(CM)-UKFS318AD1;HA2318X	13/64	5 5/64	46	53
FS319D1	C(CM)-UKFS319D1;H2319X	5	149	24	29
FS319D1	C(CM)-UKFS319ED1;HE2319X	13/64	5 55/64	53	64
FS320D1	C(CM)-UKFS320D1;H2320X	5	154	29	34
FS320D1	C(CM)-UKFS320AD1;HA2320	13/64	6 1/16	64	75
FS320D1	C(CM)-UKFS320ED1;HE2320X				
FS322D1	C(CM)-UKFS322D1;H2322X	5	160	38	46
FS324D1	C(CM)-UKFS324D1;H2324X	5	172	51	59
FS326D1	C(CM)-UKFS326D1;H2326	6	178	69	79
FS328D1	C(CM)-UKFS328D1;H2328	6	192	98	110

Round flanged units cast housing w/spigot joint
Adapter type

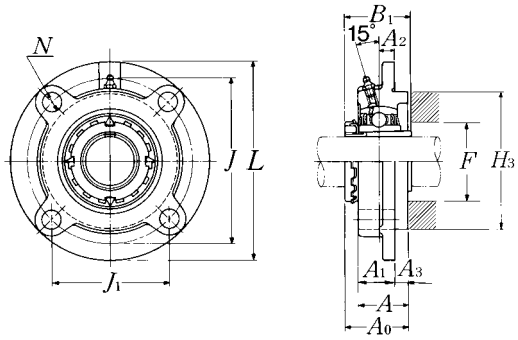

Shaft dia. mm / inch	Unit number 1) 2) 3)	Nominal dimensions (mm / inch) L	J	(J1)	A2	N	A3	A1	A1C	A	H3	A0	B1	F min.	Bolt size mm / inch	Bearing 2) 3) number
20	UKFC205D1;H2305X	115	90	63.6	10	12	6	21	22	27	70	35.5	35	30	M10	UK205D1;H2305X
3/4	UKFC205D1;HE2305	4 17/32	3 35/64	2 1/2	25/64	15/32	15/64	13/16	7/8	1 1/16	2.7559	1 25/64	1.378	1 3/16	3/8	UK205D1;HE2305
25	UKFC206D1;H2306X	125	100	70.7	10	12	8	23	24.5	31	80	39	38	36	M10	UK206D1;H2306X
7/8	UKFC206D1;HS2306	4 29/32	3 15/16	2 25/32	25/64	15/32	5/16	29/32	31/32	1 7/32	3.1496	1 17/32	1.496	1 13/32	3/8	UK206D1;HS2306
1	UKFC206D1;HE2306X															UK206D1;HE2306X
30	UKFC207D1;H2307X	135	110	77.8	11	14	8	26	26	34	90	42.5	43	40	M12	UK207D1;H2307X
1 1/8	UKFC207D1;HS2307	5 5/16	4 21/64	3 1/16	7/16	35/64	5/16	1 1/32	1 1/32	1 11/32	3.5433	1 43/64	1.693	1 9/16	7/16	UK207D1;HS2307
35	UKFC208D1;H2308X	145	120	84.9	11	14	10	26	27.5	36	100	46.5	46	46	M12	UK208D1;H2308X
1 1/4	UKFC208D1;HE2308X	5 23/32	4 23/32	3 11/32	7/16	35/64	25/64	1 1/32	1 5/64	1 27/64	3.9370	1 53/64	1.811	1 13/16	7/16	UK208D1;HE2308X
1 3/8	UKFC208D1;HS2308X															UK208D1;HS2308X
40	UKFC209D1;H2309X	160	132	93.3	10	16	12	26	28	38	105	48.5	50	52	M14	UK209D1;H2309X
1 7/16	UKFC209D1;HA2309															UK209D1;HA2309
1 1/2	UKFC209D1;HE2309X	6 5/16	5 13/64	3 43/64	25/64	5/8	15/32	1 1/32	1 7/64	1 1/2	4.1339	1 29/32	1.969	2 1/16	1/2	UK209D1;HE2309X
1 5/8	UKFC209D1;HS2309X															UK209D1;HS2309X
45	UKFC210D1;H2310X	165	138	97.6	10	16	12	28	29	40	110	50	55	57	M14	UK210D1;H2310X
1 5/8	UKFC210D1;HS2310															UK210D1;HS2310
1 11/16	UKFC210D1;HA2310	6 1/2	5 7/16	3 27/32	25/64	5/8	15/32	1 3/32	1 5/32	1 37/64	4.3307	1 31/32	2.165	2 1/4	1/2	UK210D1;HA2310
1 3/4	UKFC210D1;HE2310X															UK210D1;HE2310X
50	UKFC211D1;H2311X	185	150	106.1	13	19	12	31	32.5	43	125	54.5	59	64	M16	UK211D1;H2311X
1 7/8	UKFC211D1;HS2311															UK211D1;HS2311
1 15/16	UKFC211D1;HA2311	7 9/32	5 29/32	4 11/64	33/64	3/4	15/32	1 7/32	1 9/32	1 11/16	4.9213	2 9/64	2.323	2 17/32	5/8	UK211D1;HA2311
2	UKFC211D1;HE2311XY															UK211D1;HE2311XY
55	UKFC212D1;H2312X	195	160	113.1	17	19	12	36	38	48	135	61	62	69	M16	UK212D1;H2312X
2 1/8	UKFC212D1;HS2312	7 11/16	6 19/64	4 29/64	43/64	3/4	15/32	1 13/32	1 1/2	1 57/64	5.3150	2 13/32	2.441	2 23/32	5/8	UK212D1;HS2312
60	UKFC213D1;H2313X	205	170	120.2	16	19	14	36	38	50	145	64	65	74	M16	UK213D1;H2313X
2 3/16	UKFC213D1;HA2313															UK213D1;HA2313
2 1/4	UKFC213D1;HE2313X	8 1/16	6 11/16	4 47/64	5/8	3/4	35/64	1 13/32	1 1/2	1 31/32	5.7087	2 33/64	2.559	2 29/32	5/8	UK213D1;HE2313X
2 3/8	UKFC213D1;HS2313X															UK213D1;HS2313X

Remarks: 1) These numbers indicate relubricatable type. If maintenance free type is needed, please order without suffix "D1".
2) Adapter number with suffix "X" means a narrow slot type adapter sleeve.
In this case the lock washer with the straight inner prong should be used.
3) For HE2311XY, screw thread pitch different from the standard is applied, because of the thin thread section of sleeve.
To distinguish it, a suffix "Y" is added.
4) If the inch series housing units with dust cover are ordered with a closed end, the suffixes E, S or A are not included.
Example: SM-UKFC205D1; HE2305

Note: Please refer to page 36 for size of grease fitting.

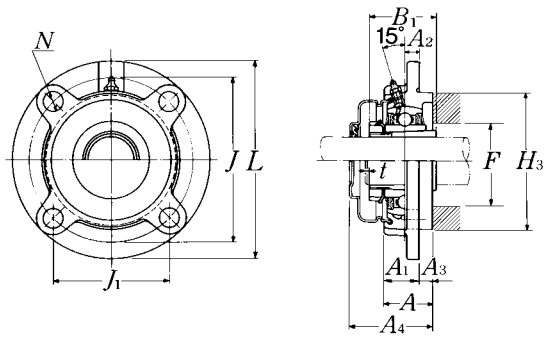

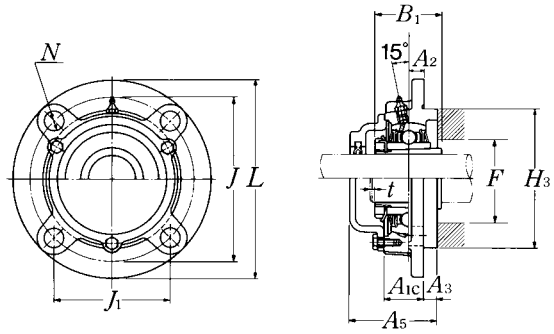

Pressed steel dust cover type
Open end: **S-UKFC···D1**
Closed end: **SM-UKFC···D1**

Cast dust cover type
Open end: **C-UKFC···D1**
Closed end: **CM-UKFC···D1**

Housing [1] number	Unit number [1) 2) 3) 4)] pressed steel dust cover type	Unit number [1) 2) 3) 4)] cast dust cover type	Nominal dimensions mm t max.	A_4	inch A_5	Mass of unit kg UKFC	S(SM)	lb C(CM)
FC205D1	S(SM)-UKFC205D1;H2305X	C(CM)-UKFC205D1;H2305X	2	44.5	51	1.0	1.1	1.2
FC205D1	S(SM)-UKFC205ED1;HE2305	C(CM)-UKFC205ED1;HE2305	5/64	1 3/4	2	2.2	2.4	2.7
FC206D1	S(SM)-UKFC206D1;H2306X	C(CM)-UKFC206D1;H2306X	2	49	56	1.3	1.4	1.7
FC206D1	S(SM)-UKFC206SD1;HS2306	C(CM)-UKFC206SD1;HS2306	5/64	1 59/64	2 13/16	2.9	3.1	3.8
FC206D1	S(SM)-UKFC206ED1;HE2306X	C(CM)-UKFC206ED1;HE2306X						
FC207D1	S(SM)-UKFC207D1;H2307X	C(CM)-UKFC207D1;H2307X	3	55	59	1.7	1.8	2.0
FC207D1	S(SM)-UKFC207SD1;HS2307	C(CM)-UKFC207SD1;HS2307	1/8	2 11/64	2 21/64	3.7	4.0	4.4
FC208D1	S(SM)-UKFC208D1;H2308X	C(CM)-UKFC208D1;H2308X	3	62	66	2.1	2.2	2.6
FC208D1	S(SM)-UKFC208ED1;HE2308X	C(CM)-UKFC208ED1;HE2308X	1/8	2 7/16	2 19/32	4.6	4.9	5.7
FC208D1	S(SM)-UKFC208SD1;HS2308X	C(CM)-UKFC208SD1;HS2308X						
FC209D1	S(SM)-UKFC209D1;H2309X	C(CM)-UKFC209D1;H2309X	3	63	70	2.8	2.9	3.4
FC209D1	S(SM)-UKFC209AD1;HA2309	C(CM)-UKFC209AD1;HA2309						
FC209D1	S(SM)-UKFC209ED1;HE2309X	C(CM)-UKFC209ED1;HE2309X	1/8	2 31/64	2 3/4	6.2	6.4	7.5
FC209D1	S(SM)-UKFC209SD1;HS2309X	C(CM)-UKFC209SD1;HS2309X						
FC210D1	S(SM)-UKFC210D1;H2310X	C(CM)-UKFC210D1;H2310X	3	65.5	72	3.1	3.3	4.8
FC210D1	S(SM)-UKFC210SD1;HS2310	C(CM)-UKFC210SD1;HS2310						
FC210D1	S(SM)-UKFC210AD1;HA2310	C(CM)-UKFC210AD1;HA2310	1/8	2 37/64	2 53/64	6.8	7.3	11
FC210D1	S(SM)-UKFC210ED1;HE2310X	C(CM)-UKFC210ED1;HE2310X						
FC211D1	S(SM)-UKFC211D1;H2311X	C(CM)-UKFC211D1;H2311X	4	71	75	4.2	4.4	5.1
FC211D1	S(SM)-UKFC211SD1;HS2311	C(CM)-UKFC211SD1;HS2311						
FC211D1	S(SM)-UKFC211AD1;HA2311	C(CM)-UKFC211AD1;HA2311	5/32	2 51/64	2 61/64	9.3	9.7	11
FC211D1	S(SM)-UKFC211ED1;HE2311XY	C(CM)-UKFC211ED1;HE2311XY						
FC212D1	S(SM)-UKFC212D1;H2312X	C(CM)-UKFC212D1;H2312X	4	80	86	5.0	5.2	6.1
FC212D1	S(SM)-UKFC212SD1;HS2312	C(CM)-UKFC212SD1;HS2312	5/32	3 5/32	3 25/64	11	11	13
FC213D1	S(SM)-UKFC213D1;H2313X	C(CM)-UKFC213D1;H2313X	4	83.5	90	6.0	6.1	7.1
FC213D1	S(SM)-UKFC213AD1;HA2313	C(CM)-UKFC213AD1;HA2313						
FC213D1	S(SM)-UKFC213ED1;HE2313X	C(CM)-UKFC213ED1;HE2313X	5/32	3 9/32	3 35/64	13	13	16
FC213D1	S(SM)-UKFC213SD1;HS2313X	C(CM)-UKFC213SD1;HS2313X						

Round flanged units cast housing w/spigot joint
Adapter type

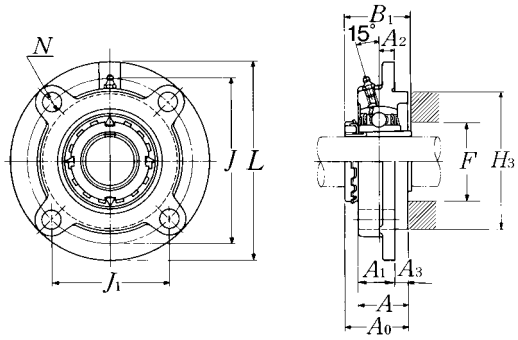

Shaft dia. mm / inch	Unit number 1) 2) 3)	Nominal dimensions (mm / inch) L	J	(J1)	A2	N	A3	A1	A1C	A	H3	A0	B1	F min.	Bolt size mm / inch	Bearing 2) 3) number
65 2 7/16 2 1/2	UKFC215D1;H2315X UKFC215D1;HA2315 UKFC215D1;HE2315X	220 8 21/32	184 7 1/4	130.1 5 1/8	18 45/64	19 3/4	16 5/8	40 1 9/16	43 1 11/16	56 2 13/64	160 6.2992	71 2 51/64	73 2.874	84 3 5/16	M16 5/8	UK215D1;H2315X UK215D1;HA2315 UK215D1;HE2315X
70 2 11/16 2 3/4	UKFC216D1;H2316X UKFC216D1;HA2316 UKFC216D1;HE2316X	240 9 7/16	200 7 7/8	141.4 5 9/16	18 45/64	23 29/32	16 5/8	42 1 21/32	43 1 11/16	58 2 9/32	170 6.6929	73.5 2 57/64	78 3.071	90 3 17/32	M20 3/4	UK216D1;H2316X UK216D1;HA2316 UK216D1;HE2316X
75 2 15/16 3	UKFC217D1;H2317X UKFC217D1;HA2317X UKFC217D1;HE2317X	250 9 27/32	208 8 3/16	147.1 5 51/64	18 45/64	23 29/32	18 45/64	45 1 25/32	45.5 1 51/64	63 2 31/64	180 7.0866	77 3 1/32	82 3.228	95 3 3/4	M20 3/4	UK217D1;H2317X UK217D1;HA2317X UK217D1;HE2317X
80 3 3/16	UKFC218D1;H2318X UKFC218D1;HA2318X	265 10 7/16	220 8 21/32	155.6 6 1/8	22 55/64	23 29/32	18 45/64	50 1 31/32	50 1 31/32	68 2 43/64	190 7.4803	81.5 3 13/64	86 3.386	102 4 1/32	M20 3/4	UK218D1;H2318X UK218D1;HA2318X

Remarks: 1) These numbers indicate relubricatable type. If maintenance free type is needed, please order without suffix "D1".
2) Adapter number with suffix "X" means a narrow slot type adapter sleeve.
In this case the lock washer with the straight inner prong should be used.
3) For HE2311XY, screw thread pitch different from the standard is applied, because of the thin thread section of sleeve.
To distinguish it, a suffix "Y" is added.
4) If the inch series housing units with dust cover are ordered with a closed end, the suffixes E, S or A are not included.
Example: SM-UKFC205D1; HE2305

Note: Please refer to page 36 for size of grease fitting.

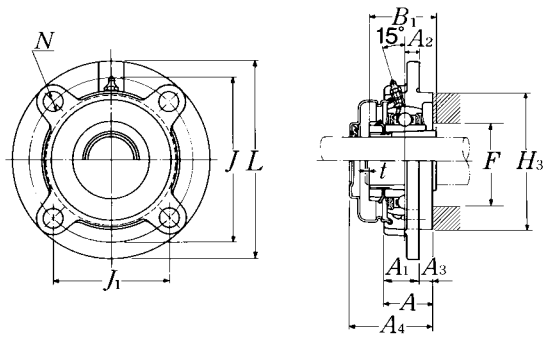

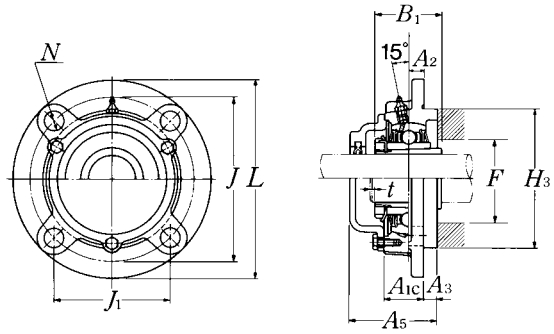

Pressed steel dust cover type
Open end: **S-UKFC···D1**
Closed end: **SM-UKFC···D1**

Cast dust cover type
Open end: **C-UKFC···D1**
Closed end: **CM-UKFC···D1**

Housing number [1]	Unit number [1) 2) 3) 4)] pressed steel dust cover type	Unit number [1) 2) 3) 4)] cast dust cover type	Nominal dimensions mm t max.	A_4	inch A_5	Mass of unit kg UKFC	S(SM)	lb C(CM)
FC215D1	—	C(CM)-UKFC215D1;H2315X	4	—	102	7.7	—	9.3
FC215D1	—	C(CM)-UKFC215AD1;HA2315	5/32	—	4 1/64	17	—	21
FC215D1		C(CM)-UKFC215ED1;HE2315X						
FC216D1	—	C(CM)-UKFC216D1;H2316X	4	—	106	9.5	—	11
FC216D1	—	C(CM)-UKFC216AD1;HA2316	5/32	—	4 11/64	21	—	24
FC216D1		C(CM)-UKFC216ED1;HE2316X						
FC217D1	—	C(CM)-UKFC217D1;H2317X	5	—	114	11	—	13
FC217D1	—	C(CM)-UKFC217AD1;HA2317X	13/64	—	4 31/64	24	—	29
FC217D1		C(CM)-UKFC217ED1;HE2317X						
FC218D1	—	C(CM)-UKFC218D1;H2318X	5	—	122	13	—	15
FC218D1	—	C(CM)-UKFC218AD1;HA2318X	13/64	—	4 51/64	29	—	33

Round flanged units cast housing w/spigot joint
Adapter type

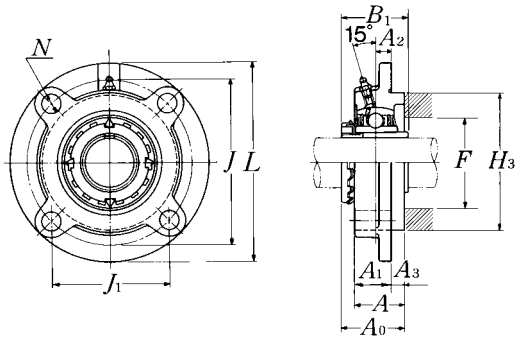

Shaft dia. mm / inch	Unit number 1) 2) 3)	Nominal dimensions (mm / inch) L	J	(J_1)	A_2	N	A_3	A_1	A	H_3	A_0	B_1	F min.	Bolt size mm / inch
20	UKFCX05D1;H2305X	111	92.1	65.1	10	9.5	6	24	30	76	37	35	30	M8
3/4	UKFCX05D1;HE2305	4 3/8	3 5/8	2 9/16	25/64	3/8	1/4	15/16	1 3/16	2.9921	1 29/64	1.378	1 3/16	5/16
25	UKFCX06D1;H2306X	127	105	74.2	8	12	9.5	22.5	32	85	40	38	36	M10
7/8	UKFCX06D1;HS2306	5	4 9/64	2 59/64	5/16	15/32	3/8	7/8	1 17/64	3.3465	1 37/64	1.496	1 13/32	3/8
1	UKFCX06D1;HE2306X													
30	UKFCX07D1;H2307X	133	111	78.5	9	12	11	26	37	92	44.5	43	40	M10
1 1/8	UKFCX07D1;HS2307	5 1/4	4 3/8	3 3/32	23/64	15/32	7/16	1 1/32	1 29/64	3.6220	1 3/4	1.693	1 9/16	3/8
35	UKFCX08D1;H2308X	133	111	78.5	9	12	11	26	37	92	45.5	46	46	M10
1 1/4	UKFCX08D1;HE2308X	5 1/4	4 3/8	3 3/32	23/64	15/32	7/16	1 1/32	1 29/64	3.6220	1 51/64	1.811	1 13/16	3/8
1 3/8	UKFCX08D1;HS2308X													
40	UKFCX09D1;H2309X	155	130	91.9	8	14	12	25	37	108	47	50	52	M12
1 7/16	UKFCX09D1;HA2309													
1 1/2	UKFCX09D1;HE2309X	6 3/32	5 1/8	3 5/8	5/16	35/64	15/32	31/32	1 29/64	4.2520	1 27/32	1.969	2 1/16	7/16
1 5/8	UKFCX09D1;HS2309X													
45	UKFCX10D1;H2310X	162	136	96.2	7	14	16	25	41	118	52.5	55	57	M12
1 5/8	UKFCX10D1;HS2310													
1 11/16	UKFCX10D1;HA2310	6 3/8	5 23/64	3 25/32	9/32	35/64	5/8	31/32	1 39/64	4.6457	2 1/16	2.165	2 1/4	7/16
1 3/4	UKFCX10D1;HE2310X													
50	UKFCX11D1;H2311X	180	152	107.5	4	16	22	26	48	127	57	59	64	M14
1 7/8	UKFCX11D1;HS2311													
1 15/16	UKFCX11D1;HA2311	7 3/32	5 63/64	4 15/64	5/32	5/8	55/64	1 1/32	1 57/64	5.0000	2 1/4	2.323	2 17/32	1/2
2	UKFCX11D1;HE2311XY													
55	UKFCX12D1;H2312X	194	165	116.7	11	16	20	33	53	140	64	62	69	M14
2 1/8	UKFCX12D1;HS2312	7 5/8	6 1/2	4 19/32	7/16	5/8	25/32	1 5/16	2 5/64	5.5118	2 33/64	2.441	2 23/32	1/2
60	UKFCX13D1;H2313X	194	165	116.7	11	16	20	33	53	140	66	65	74	M14
2 3/16	UKFCX13D1;HA2313													
2 1/4	UKFCX13D1;HE2313X	7 5/8	6 1/2	4 19/32	7/16	5/8	25/32	1 5/16	2 5/64	5.5118	2 19/32	2.559	2 29/32	1/2
2 3/8	UKFCX13D1;HS2313X													

Remarks: 1) These numbers indicate relubricatable type. If maintenance free type is needed, please order without suffix "D1".
2) Adapter number with suffix "X" means a narrow slot type adapter sleeve.
In this case the lock washer with the straight inner prong should be used.
3) For HE2311XY, screw thread pitch different from the standard is applied, because of the thin thread section of sleeve.
To distinguish it, a suffix "Y" is added.

Note: Please refer to page 36 for size of grease fitting.

Bearing number [2) 3)]	Housing [1)] number	Mass of unit kg lb
UKX05D1;H2305X	FCX05D1	1.2
UKX05D1;HE2305	FCX05D1	2.7
UKX06D1;H2306X	FCX06D1	1.5
UKX06D1;HS2306	FCX06D1	3.3
UKX06D1;HE2306X	FCX06D1	
UKX07D1;H2307X	FCX07D1	1.9
UKX07D1;HS2307	FCX07D1	4.2
UKX08D1;H2308X	FCX08D1	2.2
UKX08D1;HE2308X	FCX08D1	4.9
UKX08D1;HS2308X	FCX08D1	
UKX09D1;H2309X	FCX09D1	2.7
UKX09D1;HA2309	FCX09D1	
UKX09D1;HE2309X	FCX09D1	6.0
UKX09D1;HS2309X	FCX09D1	
UKX10D1;H2310X	FCX10D1	3.1
UKX10D1;HS2310	FCX10D1	
UKX10D1;HA2310	FCX10D1	6.8
UKX10D1;HE2310X	FCX10D1	
UKX11D1;H2311X	FCX11D1	4.2
UKX11D1;HS2311	FCX11D1	
UKX11D1;HA2311	FCX11D1	9.3
UKX11D1;HE2311XY	FCX11D1	
UKX12D1;H2312X	FCX12D1	5.5
UKX12D1;HS2312	FCX12D1	12
UKX13D1;H2313X	FCX13D1	5.4
UKX13D1;HA2313	FCX13D1	
UKX13D1;HE2313X	FCX13D1	12
UKX15D1;HS2313X	FCX13D1	

Round flanged units cast housing w/spigot joint
Adapter type

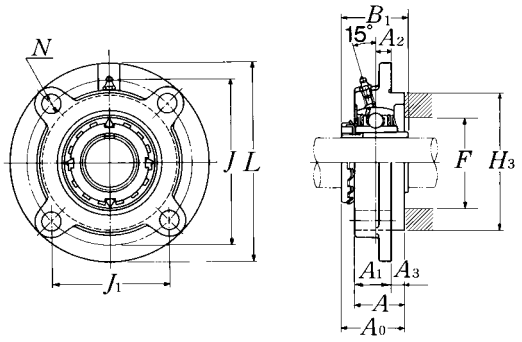

Shaft dia. mm / inch	Unit number 1) 2) 3)	Nominal dimensions mm / inch: L	J	(J1)	A2	N	A3	A1	A	H3	A0	B1	F min.	Bolt size mm / inch
65	UKFCX15D1;H2315X	222	190	134.4	12	19	22	35	57	164	71.5	73	84	M16
2 7/16	UKFCX15D1;HA2315	8 3/4	7 31/64	5 9/32	15/32	3/4	55/64	1 3/8	2 1/4	6.4567	2 13/16	2.874	3 5/16	5/8
2 1/2	UKFCX15D1;HE2315X													
70	UKFCX16D1;H2316X	260	219	154.9	10	23	25	36	61	186	75	78	90	M20
2 11/16	UKFCX16D1;HA2316	10 1/4	8 5/8	6 3/32	25/64	29/32	63/64	1 13/32	2 13/32	7.3228	2 61/64	3.071	3 17/32	3/4
2 3/4	UKFCX16D1;HE2316X													
75	UKFCX17D1;H2317X	260	219	154.9	10	23	25	36	61	186	76.5	82	95	M20
2 15/16	UKFCX17D1;HA2317X	10 1/4	8 5/8	6 3/32	25/64	29/32	63/64	1 13/32	2 13/32	7.3228	3 1/64	3.228	3 3/4	3/4
3	UKFCX17D1;HE2317X													
80	UKFCX18D1;H2318X	260	219	154.9	12	23	28	43	71	186	82.5	86	102	M20
3 3/16	UKFCX18D1;HA2318X	10 1/4	8 5/8	6 3/32	15/32	29/32	1 7/64	1 11/16	2 51/64	7.3228	3 1/4	3.386	4 1/32	3/4
90	UKFCX20D1;H2320X	276	238	168.3	22	23	28	66	94	206	99	97	112	M20

Remarks: 1) These numbers indicate relubricatable type. If maintenance free type is needed, please order without suffix "D1".
2) Adapter number with suffix "X" means a narrow slot type adapter sleeve.
In this case the lock washer with the straight inner prong should be used.
3) For HE2311XY, screw thread pitch different from the standard is applied, because of the thin thread section of sleeve.
To distinguish it, a suffix "Y" is added.

Note: Please refer to page 36 for size of grease fitting.

Bearing number [2) 3)]	Housing number [1)]	Mass of unit kg	lb
UKX15D1;H2315X	FCX15D1	8.2	
UKX15D1;HA2315	FCX15D1	18	
UKX15D1;HE2315X	FCX15D1		
UKX16D1;H2316X	FCX16D1	12	
UKX16D1;HA2316	FCX16D1	26	
UKX16D1;HE2316X	FCX16D1		
UKX17D1;H2317X	FCX17D1	12	
UKX17D1;HA2317X	FCX17D1	26	
UKX17D1;HE2317X	FCX17D1		
UKX18D1;H2318X	FCX18D1	12	
UKX18D1;HA2318X	FCX18D1	26	
UKFX20D1;H2320X	FCX20D1	18	

Rhombus flanged units cast housing
Adapter type

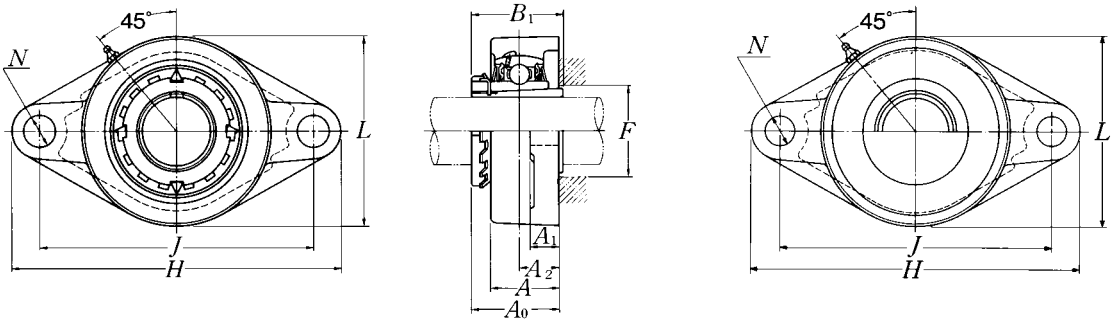

Pressed steel dust cover type
Open end: **S-UKFL···D1**
Closed end: **SM-UKFL···D1**

Shaft dia. mm / inch	Unit number 1) 2) 3)	Nominal dimensions mm / inch: H	J	A2	A1	A	N	L	A0	B1	F min.	Bolt size mm / inch	Bearing number 2) 3)
20	UKFL205D1;H2305X	130	99	16	13	27	16	68	35.5	35	30	M14	UK205D1;H2305X
3/4	UKFL205D1;HE2305	5 1/8	3 57/64	5/8	1/2	1 1/16	5/8	2 11/16	1 25/64	1.378	1 3/16	1/2	UK205D1;HE2305
25	UKFL206D1;H2306X	148	117	18	13	31	16	80	39	38	36	M14	UK206D1;H2306X
7/8	UKFL206D1;HS2306	5 13/16	4 39/64	45/64	1/2	1 7/32	5/8	3 5/32	1 17/32	1.496	1 13/32	1/2	UK206D1;HS2306
1	UKFL206D1;HE2306X												UK206D1;HE2306X
30	UKFL207D1;H2307X	161	130	19	15	34	16	90	42.5	43	40	M14	UK207D1;H2307X
1 1/8	UKFL207D1;HS2307	6 11/32	5 1/8	3/4	19/32	1 11/32	5/8	3 17/32	1 43/64	1.693	1 9/16	1/2	UK207D1;HS2307
35	UKFL208D1;H2308X	175	144	21	15	36	16	100	46.5	46	46	M14	UK208D1;H2308X
1 1/4	UKFL208D1;HE2308X	6 7/8	5 43/64	53/64	19/32	1 13/32	5/8	3 15/16	1 53/64	1.811	1 13/16	1/2	UK208D1;HE2308X
1 3/8	UKFL208D1;HS2308X												UK208D1;HS2308X
40	UKFL209D1;H2309X	188	148	22	16	38	19	108	48.5	50	52	M16	UK209D1;H2309X
1 7/16	UKFL209D1;HA2309												UK209D1;HA2309
1 1/2	UKFL209D1;HE2309X	7 13/32	5 53/64	55/64	5/8	1 1/2	3/4	4 1/4	1 29/32	1.969	2 1/16	5/8	UK209D1;HE2309X
1 5/8	UKFL209D1;HS2309X												UK209D1;HS2309X
45	UKFL210D1;H2310X	197	157	22	16	40	19	115	50	55	57	M16	UK210D1;H2310X
1 5/8	UKFL210D1;HS2310												UK210D1;HS2310
1 11/16	UKFL210D1;HA2310	7 3/4	6 3/16	55/64	5/8	1 9/16	3/4	4 17/32	1 31/32	2.165	2 1/4	5/8	UK210D1;HA2310
1 3/4	UKFL210D1;HE2310X												UK210D1;HE2310X
50	UKFL211D1;H2311X	224	184	25	18	43	19	130	54.5	59	64	M16	UK211D1;H2311X
1 7/8	UKFL211D1;HS2311												UK211D1;HS2311
1 15/16	UKFL211D1;HA2311	8 13/16	7 1/4	63/64	23/32	1 11/16	3/4	5 1/8	2 9/64	2.323	2 17/32	5/8	UK211D1;HA2311
2	UKFL211D1;HE2311XY												UK211D1;HE2311XY
55	UKFL212D1;H2312X	250	202	29	18	48	23	140	61	62	69	M20	UK212D1;H2312X
2 1/8	UKFL212D1;HS2312	9 27/32	7 61/64	1 9/64	23/32	1 7/8	29/32	5 1/2	2 13/32	2.441	2 23/32	3/4	UK212D1;HS2312
60	UKFL213D1;H2313X	258	210	30	22	50	23	155	64	65	74	M20	UK213D1;H2313X
2 3/16	UKFL213D1;HA2313												UK213D1;HA2313
2 1/4	UKFL213D1;HE2313X	10 5/32	8 17/64	1 3/16	7/8	1 31/32	29/32	6 3/32	2 33/64	2.559	2 29/32	3/4	UK213D1;HE2313X
2 3/8	UKFL213D1;HS2313X												UK213D1;HS2313X

Remarks: 1) These numbers indicate relubricatable type. If maintenance free type is needed, please order without suffix "D1".
2) Adapter number with suffix "X" means a narrow slot type adapter sleeve.
In this case the lock washer with the straight inner prong should be used.
3) For HE2311XY, screw thread pitch different from the standard is applied, because of the thin thread section of sleeve.
To distinguish it, a suffix "Y" is added.
4) If the inch series housing units with dust cover are ordered with a closed end, the suffixes E, S or A are not included.
Example: SM-UKFL205D1; HE2305

Note: Please refer to page 36 for size of grease fitting.

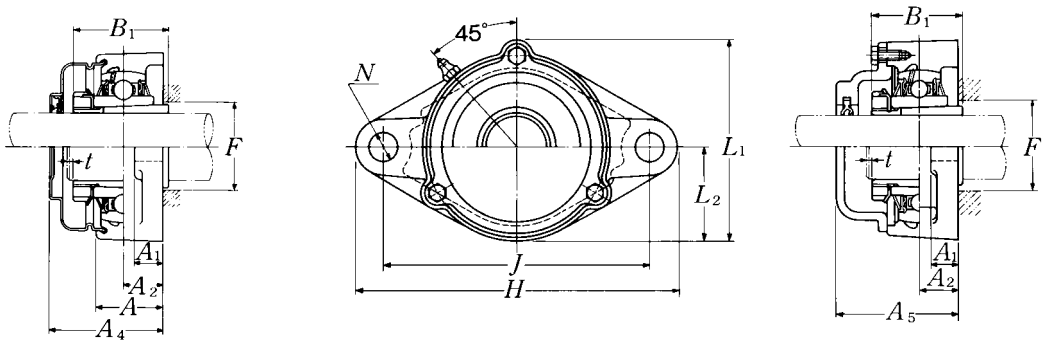

Cast dust cover type
Open end: **C-UKFL···D1**
Closed end: **CM-UKFL···D1**

Housing[1)] number	Unit number [1) 2) 3) 4)] pressed steel dust cover type	Unit number [1) 2) 3) 4)] cast dust cover type	Nominal dimensions mm / inch t max.	A_4	A_5	L_1	L_2	Mass of unit kg / lb UKFL	S(SM)	C(CM)
FL205D1	S(SM)-UKFL205D1;H2305X	C(CM)-UKFL205D1;H2305X	2	44.5	51	74	34	0.6	0.7	0.8
FL205D1	S(SM)-UKFL205ED1;HE2305	C(CM)-UKFL205ED1;HE2305	5/64	1 3/4	2	2 29/32	1 11/32	1.3	1.5	1.8
FL206D1	S(SM)-UKFL206D1;H2306X	C(CM)-UKFL206D1;H2306X	2	49	56	85	40	0.9	1.0	1.2
FL206D1	S(SM)-UKFL206SD1;HS2306	C(CM)-UKFL206SD1;HS2306	5/64	1 15/16	2 7/32	3 11/32	1 9/16	2.0	2.2	2.7
FL206D1	S(SM)-UKFL206ED1;HE2306X	C(CM)-UKFL206ED1;HE2306X								
FL207D1	S(SM)-UKFL207D1;H2307X	C(CM)-UKFL207D1;H2307X	3	55	59	97	45	1.3	1.3	1.6
FL207D1	S(SM)-UKFL207SD1;HS2307	C(CM)-UKFL207SD1;HS2307	1/8	2 5/32	2 5/16	3 13/16	1 25/32	2.9	2.9	3.5
FL208D1	S(SM)-UKFL208D1;H2308X	C(CM)-UKFL208D1;H2308X	3	62	66	106	50	1.6	1.7	2.1
FL208D1	S(SM)-UKFL208ED1;HE2308X	C(CM)-UKFL208ED1;HE2308X	1/8	2 7/16	2 19/32	4 3/16	1 31/32	3.5	3.7	4.6
FL208D1	S(SM)-UKFL208SD1;HS2308X	C(CM)-UKFL208SD1;HS2308X								
FL209D1	S(SM)-UKFL209D1;H2309X	C(CM)-UKFL209D1;H2309X	3	63	70	113	54	2.0	2.1	2.5
FL209D1	S(SM)-UKFL209AD1;HA2309	C(CM)-UKFL209AD1;HA2309								
FL209D1	S(SM)-UKFL209ED1;HE2309X	C(CM)-UKFL209ED1;HE2309X	1/8	2 15/32	2 3/4	4 7/16	2 1/8	4.4	4.6	5.5
FL209D1	S(SM)-UKFL209SD1;HS2309X	C(CM)-UKFL209SD1;HS2309X								
FL210D1	S(SM)-UKFL210D1;H2310X	C(CM)-UKFL210D1;H2310X	3	65.5	72	120	58	2.2	2.4	2.9
FL210D1	S(SM)-UKFL210SD1;HS2310	C(CM)-UKFL210SD1;HS2310								
FL210D1	S(SM)-UKFL210AD1;HA2310	C(CM)-UKFL210AD1;HA2310	1/8	2 19/32	2 27/32	4 23/32	2 9/32	4.9	5.3	6.4
FL210D1	S(SM)-UKFL210ED1;HE2310X	C(CM)-UKFL210ED1;HE2310X								
FL211D1	S(SM)-UKFL211D1;H2311X	C(CM)-UKFL211D1;H2311X	4	71	75	133	65	3.1	3.4	3.7
FL211D1	S(SM)-UKFL211SD1;HS2311	C(CM)-UKFL211SD1;HS2311								
FL211D1	S(SM)-UKFL211AD1;HA2311	C(CM)-UKFL211AD1;HA2311	5/32	2 25/32	2 15/16	5 1/4	2 9/16	6.8	7.5	8.2
FL211D1	S(SM)-UKFL211ED1;HE2311XY	C(CM)-UKFL211ED1;HE2311XY								
FL212D1	S(SM)-UKFL212D1;H2312X	C(CM)-UKFL212D1;H2312X	4	80	86	144	70	3.9	4.2	4.7
FL212D1	S(SM)-UKFL212SD1;HS2312	C(CM)-UKFL212SD1;HS2312	5/32	3 5/32	3 3/8	5 21/32	2 3/4	8.6	9.3	10
FL213D1	S(SM)-UKFL213D1;H2313X	C(CM)-UKFL213D1;H2313X	4	83.5	90	157	78	5.0	5.4	6.0
FL213D1	S(SM)-UKFL213AD1;HA2313	C(CM)-UKFL213AD1;HA2313								
FL213D1	S(SM)-UKFL213ED1;HE2313X	C(CM)-UKFL213ED1;HE2313X	5/32	3 9/32	3 17/32	6 3/16	3 1/16	11	12	13
FL213D1	S(SM)-UKFL213SD1;HS2313X	C(CM)-UKFL213SD1;HS2313X								

Rhombus flanged units cast housing
Adapter type

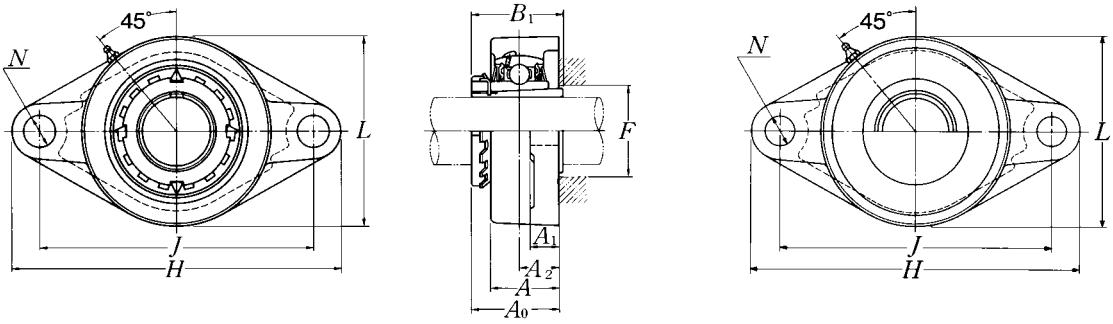

Pressed steel dust cover type
Open end: **S-UKFL···D1**
Closed end: **SM-UKFL···D1**

Shaft dia. mm / inch	Unit number 1) 2) 3)	Nominal dimensions mm / inch: H	J	A2	A1	A	N	L	A0	B1	F min.	Bolt size mm / inch	Bearing number 2) 3)
65	UKFL215D1;H2315X	275	225	34	22	56	23	165	71	73	84	M20	UK215D1;H2315X
2 7/16	UKFL215D1;HA2315	10 13/16	8 55/64	1 11/32	7/8	2 7/32	29/32	6 1/2	2 51/64	2.874	3 5/16	3/4	UK215D1;HA2315
2 1/2	UKFL215D1;HE2315X												UK215D1;HE2315X
70	UKFL216D1;H2316X	290	233	34	22	58	25	180	73.5	78	90	M22	UK216D1;H2316X
2 11/16	UKFL216D1;HA2316	11 13/32	9 11/64	1 11/32	7/8	2 9/32	63/64	7 3/32	2 57/64	3.071	3 17/32	7/8	UK216D1;HA2316
2 3/4	UKFL216D1;HE2316X												UK216D1;HE2316X
75	UKFL217D1;H2317X	305	248	36	24	63	25	190	77	82	95	M22	UK217D1;H2317X
2 15/16	UKFL217D1;HA2317X	12	9 49/64	1 27/64	15/16	2 15/32	63/64	7 15/32	3 1/32	3.228	3 3/4	7/8	UK217D1;HA2317X
3	UKFL217D1;HE2317X												UK217D1;HE2317X
80	UKFL218D1;H2318X	320	265	40	24	68	25	205	81.5	86	102	M22	UK218D1;H2318X
3 3/16	UKFL218D1;HA2318X	12 19/32	10 7/16	1 37/64	15/16	2 11/16	63/64	8 1/16	3 13/64	3.386	4 1/32	7/8	UK218D1;HA2318X

Remarks: 1) These numbers indicate relubricatable type. If maintenance free type is needed, please order without suffix "D1".
2) Adapter number with suffix "X" means a narrow slot type adapter sleeve.
In this case the lock washer with the straight inner prong should be used.
3) For HE2311XY, screw thread pitch different from the standard is applied, because of the thin thread section of sleeve.
To distinguish it, a suffix "Y" is added.
4) If the inch series housing units with dust cover are ordered with a closed end, the suffixes E, S or A are not included.
Example: SM-UKFL205D1; HE2305

Note: Please refer to page 36 for size of grease fitting.

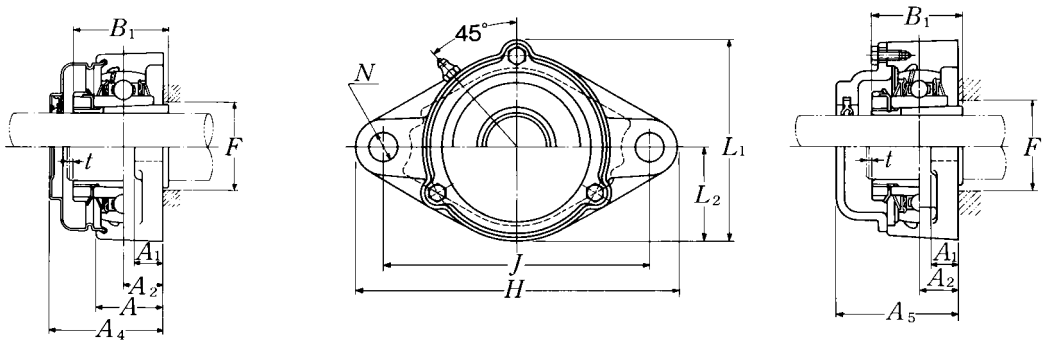

Cast dust cover type
Open end: **C-UKFL···D1**
Closed end: **CM-UKFL···D1**

Housing[1)] number	Unit number [1) 2) 3) 4)] pressed steel dust cover type	Unit number [1) 2) 3) 4)] cast dust cover type	Nominal dimensions mm t max.	A_4	A_5	inch L_1	L_2	Mass of unit kg UKFL	S(SM)	lb C(CM)
FL215D1	—	C(CM)-UKFL215D1;H2315X	4	—	102	169	82	6.2	—	7.6
FL215D1	—	C(CM)-UKFL215AD1;HA2315	5/32	—	4 1/32	6 21/32	3 7/32	14	—	17
FL215D1		C(CM)-UKFL215ED1;HE2315X								
FL216D1	—	C(CM)-UKFL216D1;H2316X	4	—	106	183	90	7.9	—	9.3
FL216D1	—	C(CM)-UKFL216AD1;HA2316	5/32	—	4 3/16	7 7/32	3 17/32	17	—	21
FL216D1		C(CM)-UKFL216ED1;HE2316X								
FL217D1	—	C(CM)-UKFL217D1;H2317X	5	—	114	192	95	9.2	—	11
FL217D1	—	C(CM)-UKFL217AD1;HA2317X	13/64	—	4 1/2	7 9/16	3 3/4	20	—	24
FL217D1		C(CM)-UKFL217ED1;HE2317X								
FL218D1	—	C(CM)-UKFL218D1;H2318X	5	—	122	205	102	11	—	13
FL218D1	—	C(CM)-UKFL218AD1;HA2318X	13/64	—	4 13/16	8 1/16	4 1/32	24	—	29

Rhombus flanged units cast housing
Adapter type

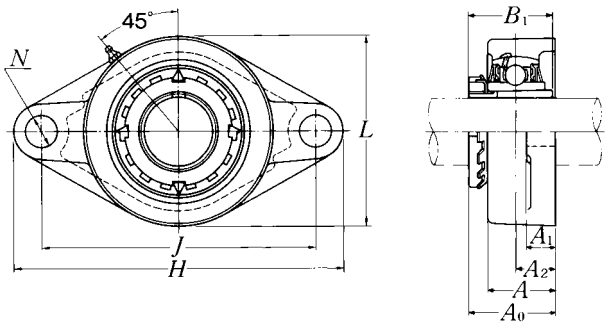

Shaft dia. mm / inch	Unit number 1) 2) 3)	Nominal dimensions mm / inch H	J	A2	A1	A	N	L	A0	B1	Bolt size mm / inch	Bearing number 2) 3)
20	UKFL305D1;H2305X	150	113	16	13	29	19	80	37	35	M16	UK305D1;H2305X
3/4	UKFL305D1;HE2305	5 29/32	4 29/64	5/8	1/2	1 5/32	3/4	3 5/32	1 29/64	1.378	5/8	UK305D1;HE2305
25	UKFL306D1;H2306X	180	134	18	15	32	23	90	40.5	38	M20	UK306D1;H2306X
7/8	UKFL306D1;HS2306	7 3/32	5 9/32	45/64	19/32	1 1/4	29/32	3 17/32	1 19/32	1.496	3/4	UK306D1;HS2306
1	UKFL306D1;HE2306X											UK306D1;HE2306X
30	UKFL307D1;H2307X	185	141	20	16	36	23	100	45.5	43	M20	UK307D1;H2307X
1 1/8	UKFL307D1;HS2307	7 9/32	5 35/64	25/32	5/8	1 13/32	29/32	3 15/16	1 51/64	1.693	3/4	UK307D1;HS2307
35	UKFL308D1;H2308X	200	158	23	17	40	23	112	50	46	M20	UK308D1;H2308X
1 1/4	UKFL308D1;HE2308X	7 7/8	6 7/32	29/32	21/32	1 9/16	29/32	4 13/32	1 31/32	1.811	3/4	UK308D1;HE2308X
1 3/8	UKFL308D1;HS2308X											UK308D1;HS2308X
40	UKFL309D1;H2309X	230	177	25	18	44	25	125	54.5	50	M22	UK309D1;H2309X
1 7/16	UKFL309D1;HA2309											UK309D1;HA2309
1 1/2	UKFL309D1;HE2309X	9 1/16	6 31/32	63/64	23/32	1 23/32	63/64	4 29/32	2 9/64	1.969	7/8	UK309D1;HE2309X
1 5/8	UKFL309D1;HS2309X											UK309D1;HS2309X
45	UKFL310D1;H2310X	240	187	28	19	48	25	140	60.5	55	M22	UK310D1;H2310X
1 5/8	UKFL310D1;HS2310											UK310D1;HS2310
1 11/16	UKFL310D1;HA2310	9 7/16	7 23/64	1 7/64	3/4	1 7/8	63/64	5 1/2	2 3/8	2.165	7/8	UK310D1;HA2310
1 3/4	UKFL310D1;HE2310X											UK310D1;HE2310X
50	UKFL311D1;H2311X	250	198	30	20	52	25	150	64	59	M22	UK311D1;H2311X
1 7/8	UKFL311D1;HS2311											UK311D1;HS2311
1 15/16	UKFL311D1;HA2311	9 27/32	7 51/64	1 3/16	25/32	2 1/16	63/64	5 29/32	2 33/64	2.323	7/8	UK311D1;HA2311
2	UKFL311D1;HE2311XY											UK311D1;HE2311XY
55	UKFL312D1;H2312X	270	212	33	22	56	31	160	69.5	62	M27	UK312D1;H2312X
2 1/8	UKFL312D1;HS2312	10 5/8	8 11/32	1 19/64	7/8	2 7/32	1 7/32	6 5/16	2 47/64	2.441	1	UK312D1;HS2312
60	UKFL313D1;H2313X	295	240	33	25	58	31	175	71.5	65	M27	UK313D1;H2313X
2 3/16	UKFL313D1;HA2313											UK313D1;HA2313
2 1/4	UKFL313D1;HE2313X	11 5/8	9 29/64	1 19/64	31/32	2 9/32	1 7/32	6 7/8	2 13/16	2.559	1	UK313D1;HE2313X
2 3/8	UKFL313D1;HS2313X											UK313D1;HS2313X

Remarks: 1) These numbers indicate relubricatable type. If maintenance free type is needed, please order without suffix "D1".
2) Adapter number with suffix "X" means a narrow slot type adapter sleeve.
In this case the lock washer with the straight inner prong should be used.
3) For HE2311XY, screw thread pitch different from the standard is applied, because of the thin thread section of sleeve.
To distinguish it, a suffix "Y" is added.
4) If the inch series housing units with dust cover are ordered with a closed end, the suffixes E, S or A are not included.
Example: CM-UKFL305D1; HE2305

Note: Please refer to page 36 for size of grease fitting.

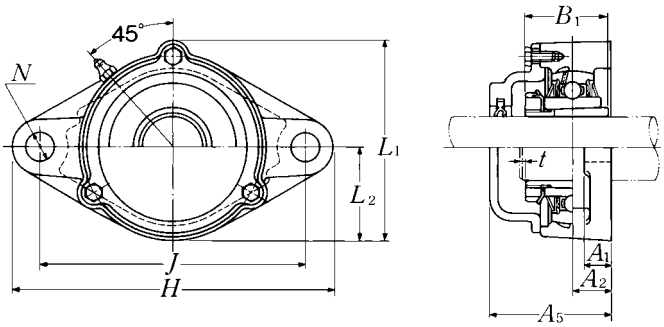

Cast dust cover type
Open end: **C-UKFL···D1**
Closed end: **CM-UKFL···D1**

Housing[1)] number	Unit number [1) 2) 3) 4)] cast dust cover type	Nominal dimensions				Mass of unit	
		mm / inch				kg / lb	
		t max.	A_5	L_1	L_2	UKFL	C(CM)
FL305D1	C(CM)-UKFL305D1;H2305X	2	56	86	40	1.0	1.3
FL305D1	C(CM)-UKFL305ED1;HE2305	5/64	2 7/32	3 3/8	1 9/16	2.2	2.9
FL306D1	C(CM)-UKFL306D1;H2306X	2	60	101	45	1.5	1.8
FL306D1	C(CM)-UKFL306SD1;HS2306	5/64	2 3/8	3 31/32	1 25/32	3.3	4.0
FL306D1	C(CM)-UKFL306ED1;HE2306X						
FL307D1	C(CM)-UKFL307D1;H2307X	3	68	110	50	1.8	2.2
FL307D1	C(CM)-UKFL307SD1;HS2307	1/8	2 11/16	4 11/32	1 31/32	4.0	4.9
FL308D1	C(CM)-UKFL308D1;H2308X	3	76	122	56	2.2	3.0
FL308D1	C(CM)-UKFL308ED1;HE2308X	1/8	3	4 13/16	2 7/32	4.9	6.6
FL308D1	C(CM)-UKFL308SD1;HS2308X						
FL309D1	C(CM)-UKFL309D1;H2309X	3	80	135	62	3.0	3.9
FL309D1	C(CM)-UKFL309AD1;HA2309						
FL309D1	C(CM)-UKFL309ED1;HE2309X	1/8	3 5/32	5 5/16	2 7/16	6.6	8.6
FL309D1	C(CM)-UKFL309SD1;HS2309X						
FL310D1	C(CM)-UKFL310D1;H2310X	3	88	152	70	4.1	5.1
FL310D1	C(CM)-UKFL310SD1;HS2310						
FL310D1	C(CM)-UKFL310AD1;HA2310	1/8	3 15/32	5 31/32	2 3/4	9.0	11
FL310D1	C(CM)-UKFL310ED1;HE2310X						
FL311D1	C(CM)-UKFL311D1;H2311X	4	92	162	75	4.6	6.0
FL311D1	C(CM)-UKFL311SD1;HS2311						
FL311D1	C(CM)-UKFL311AD1;HA2311	5/32	3 5/8	6 3/8	2 15/16	10	13
FL311D1	C(CM)-UKFL311ED1;HE2311XY						
FL312D1	C(CM)-UKFL312D1;H2312X	4	100	175	80	5.7	7.7
FL312D1	C(CM)-UKFL312SD1;HS2312	5/32	3 15/16	6 7/8	3 5/32	13	17
FL313D1	C(CM)-UKFL313D1;H2313X	4	103	189	88	7.4	9.8
FL313D1	C(CM)-UKFL313AD1;HA2313						
FL313D1	C(CM)-UKFL313ED1;HE2313X	5/32	4 1/16	7 7/16	3 15/32	16	22
FL313D1	C(CM)-UKFL313SD1;HS2313X						

Rhombus flanged units cast housing
Adapter type

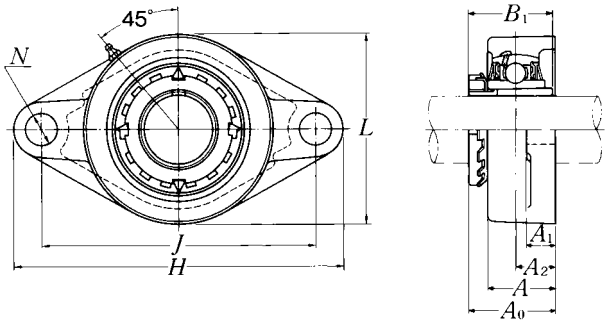

Shaft dia. mm / inch	Unit number 1) 2) 3)	Nominal dimensions mm / inch H	J	A2	A1	A	N	L	A0	B1	Bolt size mm / inch	Bearing number 2) 3)
65 2 7/16 2 1/2	UKFL315D1;H2315X UKFL315D1;HA2315 UKFL315D1;HE2315X	320 12 19/32	260 10 15/64	39 1 17/32	30 1 3/16	66 2 19/32	35 1 3/8	195 7 11/16	81.5 3 13/64	73 2.874	M30 1 1/8	UK315D1;H2315X UK315D1;HA2315 UK315D1;HE2315X
70 2 11/16 2 3/4	UKFL316D1;H2316X UKFL316D1;HA2316 UKFL316D1;HE2316X	355 13 31/32	285 11 7/32	38 1 1/2	32 1 1/4	68 2 11/16	38 1 1/2	210 8 9/32	84 3 5/16	78 3.071	M33 1 1/4	UK316D1;H2316X UK316D1;HA2316 UK316D1;HE2316X
75 2 15/16 3	UKFL317D1;H2317X UKFL317D1;HA2317X UKFL317D1;HE2317X	370 14 9/16	300 11 13/16	44 1 47/64	32 1 1/4	74 2 29/32	38 1 1/2	220 8 21/32	92 3 5/8	82 3.228	M33 1 1/4	UK317D1;H2317X UK317D1;HA2317X UK317D1;HE2317X
80 3 3/16	UKFL318D1;H2318X UKFL318D1;HA2318X	385 15 5/32	315 12 13/32	44 1 47/64	36 1 13/32	76 3	38 1 1/2	235 9 1/4	94 3 45/64	86 3.386	M33 1 1/4	UK318D1;H2318X UK318D1;HA2318X
85 3 1/4	UKFL319D1;H2319X UKFL319D1;HE2319X	405 15 15/16	330 12 63/64	59 2 21/64	40 1 9/16	94 3 11/16	41 1 39/64	250 9 27/32	111.5 4 25/64	90 3.543	M36 1 3/8	UK319D1;H2319X UK319D1;HE2319X
90 3 7/16 3 1/2	UKFL320D1;H2320X UKFL320D1;HA2320 UKFL320D1;HE2320X	440 17 5/16	360 14 11/64	59 2 21/64	40 1 9/16	94 3 11/16	44 1 47/64	270 10 5/8	115.5 4 35/64	97 3.819	M39 1 1/2	UK320D1;H2320X UK320D1;HA2320 UK320D1;HE2320X
100	UKFL322D1;H2322X	470	390	60	42	96	44	300	121	105	M39	UK322D1;H2322X
110	UKFL324D1;H2324X	520	430	65	48	110	47	330	130	112	M42	UK324D1;H2324X
115	UKFL326D1;H2326	550	460	65	50	115	47	360	133	121	M42	UK326D1;H2326
125	UKFL328D1;H2328	600	500	75	60	125	51	400	146.5	131	M45	UK328D1;H2328

Remarks: 1) These numbers indicate relubricatable type. If maintenance free type is needed, please order without suffix "D1".
2) Adapter number with suffix "X" means a narrow slot type adapter sleeve.
In this case the lock washer with the straight inner prong should be used.
3) For HE2311XY, screw thread pitch different from the standard is applied, because of the thin thread section of sleeve.
To distinguish it, a suffix "Y" is added.
4) If the inch series housing units with dust cover are ordered with a closed end, the suffixes E, S or A are not included.
Example: CM-UKFL305D1; HE2305

Note: Please refer to page 36 for size of grease fitting.

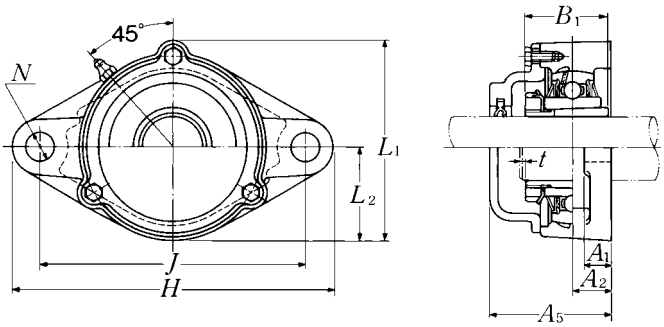

Cast dust cover type
Open end: **C-UKFL···D1**
Closed end: **CM-UKFL···D1**

Housing[1] number	Unit number [1) 2) 3) 4)] cast dust cover type	Nominal dimensions				Mass of unit	
		mm / inch				kg / lb	
		t max.	A_5	L_1	L_2	UKFL	C(CM)
FL315D1	C(CM)-UKFL315D1;H2315X	4	114	210	98	9.9	13
FL315D1	C(CM)-UKFL315AD1;HA2315	5/32	4 1/2	8 9/32	3 27/32	22	29
FL315D1	C(CM)-UKFL315ED1;HE2315X						
FL316D1	C(CM)-UKFL316D1;H2316X	4	116	222	105	13	17
FL316D1	C(CM)-UKFL316AD1;HA2316	5/32	4 9/16	8 3/4	4 1/8	29	37
FL316D1	C(CM)-UKFL316ED1;HE2316X						
FL317D1	C(CM)-UKFL317D1;H2317X	5	127	234	110	15	18
FL317D1	C(CM)-UKFL317AD1;HA2317X	13/64	5	9 7/32	4 11/32	33	40
FL317D1	C(CM)-UKFL317ED1;HE2317X						
FL318D1	C(CM)-UKFL318D1;H2318X	5	129	247	118	18	22
FL318D1	C(CM)-UKFL318AD1;HA2318X	13/64	5 3/32	9 23/32	4 21/32	40	49
FL319D1	C(CM)-UKFL319D1;H2319X	5	149	260	125	22	27
FL319D1	C(CM)-UKFL319ED1;HE2319X	13/64	5 7/8	10 1/4	4 29/32	49	60
FL320D1	C(CM)-UKFL320D1;H2320X	5	154	280	135	26	32
FL320D1	C(CM)-UKFL320AD1;HA2320	13/64	6 1/16	11 1/32	5 5/16	57	71
FL320D1	C(CM)-UKFL320ED1;HE2320X						
FL322D1	C(CM)-UKFL322D1;H2322X	5	160	315	150	34	41
FL324D1	C(CM)-UKFL324D1;H2324X	5	172	342	165	47	52
FL326D1	C(CM)-UKFL326D1;H2326	6	178	376	180	58	65
FL328D1	C(CM)-UKFL328D1;H2328	6	192	410	200	82	90

Rhombus flanged units cast housing
Adapter type

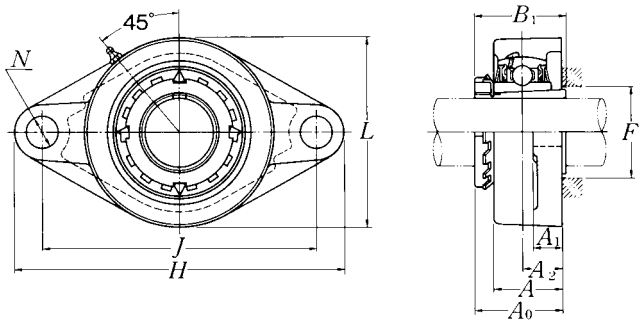

Shaft dia. mm / inch	Unit number 1) 2)	Nominal dimensions H	J	A2	A1	A	N	L	A0	B1	F min.	Bolt size mm / inch
		mm					inch					
20	UKFLX05D1;H2305X	141	117	18	13	30	12	83	39	35	30	M10
3/4	UKFLX05D1;HE2305	5 9/16	4 39/64	45/64	1/2	1 3/16	15/32	3 9/32	1 17/32	1.378	1 3/16	3/8
25	UKFLX06D1;H2306X	156	130	19	15	34	16	95	41.5	38	36	M14
7/8	UKFLX06D1;HS2306	6 5/32	5 1/8	3/4	19/32	1 11/32	5/8	3 3/4	1 41/64	1.496	1 13/32	1/2
1	UKFLX06D1;HE2306X											
30	UKFLX07D1;H2307X	171	144	21	16	38	16	105	45.5	43	40	M14
1 1/8	UKFLX07D1;HS2307	6 23/32	5 43/64	53/64	5/8	1 1/2	5/8	4 1/8	1 51/64	1.693	1 9/16	1/2
35	UKFLX08D1;H2308X	179	148	22	16	40	16	111	47.5	46	46	M14
1 1/4	UKFLX08D1;HE2308X	7 1/16	5 53/64	55/64	5/8	1 9/16	5/8	4 3/8	1 7/8	1.811	1 13/16	1/2
1 3/8	UKFLX08D1;HS2308X											
40	UKFLX09D1;H2309X	189	157	23	16	40	16	116	50	50	52	M14
1 7/16	UKFLX09D1;HA2309											
1 1/2	UKFLX09D1;HE2309X	7 7/16	6 3/16	29/32	5/8	1 9/16	5/8	4 9/16	1 31/32	1.969	2 1/16	1/2
1 5/8	UKFLX09D1;HS2309X											
45	UKFLX10D1;H2310X	216	184	26	18	44	19	133	55.5	55	57	M16
1 5/8	UKFLX10D1;HS2310											
1 11/16	UKFLX10D1;HA2310	8 1/2	7 1/4	1 1/32	23/32	1 23/32	3/4	5 1/4	2 3/16	2.165	2 1/4	5/8
1 3/4	UKFLX10D1;HE2310X											

Remarks: 1) These numbers indicate relubricatable type. If maintenance free type is needed, please order without suffix "D1".
2) Adapter number with suffix "X" means a narrow slot type adapter sleeve.
In this case the lock washer with the straight inner prong should be used.
3) If the inch series housing units with dust cover are ordered with a closed end, the suffixes E, S or A are not included.
Example: CM-UKFLX05D1; HE2305

Note: Please refer to page 36 for size of grease fitting.

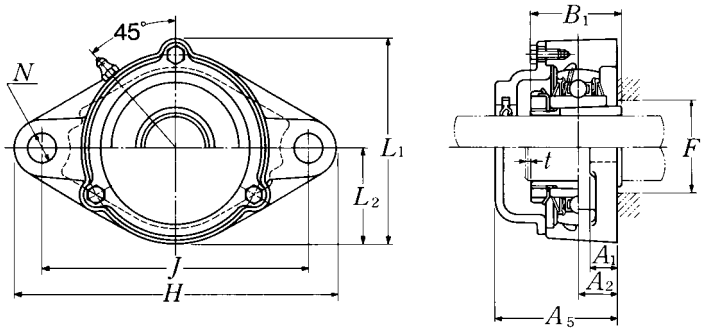

Cast dust cover type
Open end: **C-UKFLX···D1**
Closed end: **CM-UKFLX···D1**

Bearing number 2)	Housing 1) number	Unit number 1) 2) 3) cast dust cover type	Nominal dimensions				Mass of unit	
			mm / inch				kg / lb	
			t max.	A_5	L_1	L_2	UKFLX	C(CM)
UKX05D1;H2305X	FLX05D1	**C(CM)-UKFLX05D1;H2305X**	2	56	86	41.5	1.0	1.2
UKX05D1;HE2305	FLX05D1	**C(CM)-UKFLX05ED1;HE2305**	5/64	2 7/32	3 3/8	1 5/8	2.2	2.7
UKX06D1;H2306X	FLX06D1	**C(CM)-UKFLX06D1;H2306X**	2	59	98.5	49.5	1.4	1.6
UKX06D1;HS2306	FLX06D1	**C(CM)-UKFLX06SD1;HS2306**	5/64	2 5/16	3 7/8	1 15/16	3.1	3.5
UKX06D1;HE2306X	FLX06D1	**C(CM)-UKFLX06ED1;HE2306X**						
UKX07D1;H2307X	FLX07D1	**C(CM)-UKFLX07D1;H2307X**	3	66	108.5	52.5	1.8	2.2
UKX07D1;HS2307	FLX07D1	**C(CM)-UKFLX07SD1;HS2307**	1/8	2 19/32	4 9/32	2 1/16	4.0	4.9
UKX08D1;H2308X	FLX08D1	**C(CM)-UKFLX08D1;H2308X**	3	70	114.5	55.5	2.2	2.6
UKX08D1;HE2308X	FLX08D1	**C(CM)-UKFLX08ED1;HE2308X**	1/8	2 3/4	4 1/2	2 3/16	4.9	5.7
UKX08D1;HS2308X	FLX08D1	**C(CM)-UKFLX08SD1;HS2308X**						
UKX09D1;H2309X	FLX09D1	**C(CM)-UKFLX09D1;H2309X**	3	73	119.5	58	2.2	2.7
UKX09D1;HA2309	FLX09D1	**C(CM)-UKFLX09AD1;HA2309**						
UKX09D1;HE2309X	FLX09D1	**C(CM)-UKFLX09ED1;HE2309X**	1/8	2 7/8	4 23/32	2 9/32	4.9	6.0
UKX09D1;HS2309X	FLX09D1	**C(CM)-UKFLX09SD1;HS2309X**						
UKX10D1;H2310X	FLX10D1	**C(CM)-UKFLX10D1;H2310X**	3	76	133.5	66.5	3.1	3.6
UKX10D1;HS2310	FLX10D1	**C(CM)-UKFLX10SD1;HS2310**						
UKX10D1;HA2310	FLX10D1	**C(CM)-UKFLX10AD1;HA2310**	1/8	3	5 1/4	2 5/8	6.8	7.9
UKX10D1;HE2310X	FLX10D1	**C(CM)-UKFLX10ED1;HE2310X**						

Take-up units cast housing
Adapter type

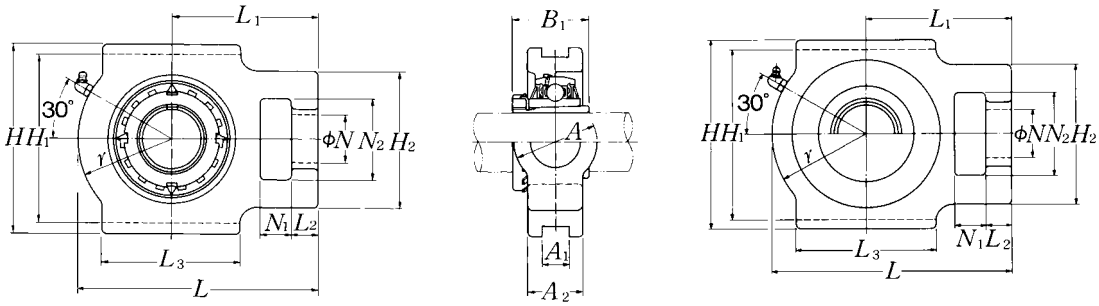

Pressed steel dust cover type
Open end: **S-UKT···D1**
Closed end: **SM-UKT···D1**

Shaft dia. mm / inch	Unit number [1) 2) 3)]	Nominal dimensions (mm / inch) N_1	L_2	H_2	N_2	N	L_3	A_1	H_1	H	L	A_2	A	r	L_1	B_1	Bearing number [2) 3)]
20	UKT205D1;H2305X	16	12	51	32	19	51	12	76	89	97	24	32	35	62	35	UK205D1;H2305X
3/4	UKT205D1;HE2305	5/8	15/32	2	1 1/4	3/4	2	0.472	2 63/64	3 1/2	3 13/16	15/16	1 1/4	1 3/8	2 7/16	1.378	UK205D1;HE2305
25	UKT206D1;H2306X	16	12	56	37	22	57	12	89	102	113	28	37	43	70	38	UK206D1;H2306X
7/8	UKT206D1;HS2306	5/8	15/32	2 7/32	1 15/32	7/8	2 1/4	0.472	3 1/2	4 1/32	4 7/16	1 3/32	1 15/32	1 11/16	2 3/4	1.496	UK206D1;HS2306
1	UKT206D1;HE2306X																UK206D1;HE2306X
30	UKT207D1;H2307X	16	15	64	37	22	64	12	89	102	129	30	37	51	78	43	UK207D1;H2307X
1 1/8	UKT207D1;HS2307	5/8	19/32	2 17/32	1 15/32	7/8	2 17/32	0.472	3 1/2	4 1/32	5 3/32	1 3/16	1 15/32	2	3 1/16	1.693	UK207D1;HS2307
35	UKT208D1;H2308X	19	18	83	49	29	83	16	102	114	144	33	49	56	88	46	UK208D1;H2308X
1 1/4	UKT208D1;HE2308X	3/4	23/32	3 9/32	1 15/16	1 5/32	3 9/32	0.630	4 1/64	4 1/2	5 21/32	1 5/16	1 15/16	2 7/32	3 15/32	1.811	UK208D1;HE2308X
1 3/8	UKT208D1;HS2308X																UK208D1;HS2308X
40	UKT209D1;H2309X	19	18	83	49	29	83	16	102	117	145	35	49	57	88	50	UK209D1;H2309X
1 7/16	UKT209D1;HA2309																UK209D1;HA2309
1 1/2	UKT209D1;HE2309X	3/4	23/32	3 9/32	1 15/16	1 5/32	3 9/32	0.630	4 1/64	4 19/32	5 23/32	1 3/8	1 15/16	2 1/4	3 15/32	1.969	UK209D1;HE2309X
1 5/8	UKT209D1;HS2309X																UK209D1;HS2309X
45	UKT210D1;H2310X	19	18	83	49	29	86	16	102	117	151	37	49	59	92	55	UK210D1;H2310X
1 5/8	UKT210D1;HS2310																UK210D1;HS2310
1 11/16	UKT210D1;HA2310	3/4	23/32	3 9/32	1 15/16	1 5/32	3 3/8	0.630	4 1/64	4 19/32	5 15/16	1 15/32	1 15/16	2 5/16	3 5/8	2.165	UK210D1;HA2310
1 3/4	UKT210D1;HE2310X																UK210D1;HE2310X
50	UKT211D1;H2311X	25	21	102	64	35	95	22	130	146	171	38	64	65	106	59	UK211D1;H2311X
1 7/8	UKT211D1;HS2311																UK211D1;HS2311
1 15/16	UKT211D1;HA2311	31/32	13/16	4 1/32	2 17/32	1 3/8	3 3/4	0.866	5 1/8	5 3/4	6 23/32	1 1/2	2 17/32	2 9/16	4 3/16	2.323	UK211D1;HA2311
2	UKT211D1;HE2311XY																UK211D1;HE2311XY
55	UKT212D1;H2312X	32	21	102	64	35	102	22	130	146	194	42	64	75	119	62	UK212D1;H2312X
2 1/8	UKT212D1;HS2312	1 1/4	13/16	4 1/32	2 17/32	1 3/8	4 1/32	0.866	5 1/8	5 3/4	7 5/8	1 21/32	2 17/32	2 15/16	4 11/16	2.441	UK212D1;HS2312
60	UKT213D1;H2313X	32	23	111	70	41	121	26	151	167	224	44	70	87	137	65	UK213D1;H2313X
2 3/16	UKT213D1;HA2313																UK213D1;HA2313
2 1/4	UKT213D1;HE2313X	1 1/4	29/32	4 3/8	2 3/4	1 5/8	4 3/4	1.024	5 15/16	6 9/16	8 13/16	1 23/32	2 3/4	3 7/16	5 13/32	2.559	UK213D1;HE2313X
2 3/8	UKT213D1;HS2313X																UK213D1;HS2313X

Remarks: 1) These numbers indicate relubricatable type. If maintenance free type is needed, please order without suffix "D1".
2) Adapter number with suffix "X" means a narrow slot type adapter sleeve.
In this case the lock washer with the straight inner prong should be used.
3) For HE2311XY, screw thread pitch different from the standard is applied, because of the thin thread section of sleeve.
To distinguish it, a suffix "Y" is added.

Note: Please refer to page 36 for size of grease fitting.

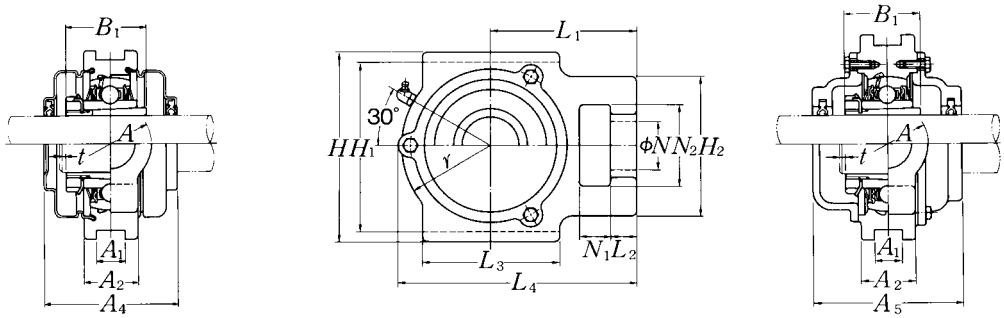

Cast dust cover type
Open end: **C-UKT···D1**
Closed end: **CM-UKT···D1**

Housing[1)] number	Unit number [1) 2) 3)] pressed steel dust cover type	Unit number[1) 2) 3)] cast dust cover type	Nominal dimensions mm / inch				Mass of unit kg / lb		
			t max.	A_4	L_4	A_5	UKT	S(SM)	C(CM)
T205D1	S(SM)-UKT205D1;H2305X	C(CM)-UKT205D1;H2305X	2	57	100.5	70	0.9	0.9	1.2
T205D1	S(SM)-UKT205ED1;HE2305	C(CM)-UKT205ED1;HE2305	5/64	2 1/4	3 31/32	2 3/4	2.0	2.0	2.7
T206D1	S(SM)-UKT206D1;H2306X	C(CM)-UKT206D1;H2306X	2	62	113.5	75	1.3	1.4	1.8
T206D1	S(SM)-UKT206SD1;HS2306	C(CM)-UKT206SD1;HS2306	5/64	2 7/16	4 15/32	2 15/16	2.9	3.1	4.0
T206D1	S(SM)-UKT206ED1;HE2306X	C(CM)-UKT206ED1;HE2306X							
T207D1	S(SM)-UKT207D1;H2307X	C(CM)-UKT207D1;H2307X	3	72	129	80	1.7	1.8	2.2
T207D1	S(SM)-UKT207SD1;HS2307	C(CM)-UKT207SD1;HS2307	1/8	2 27/32	5 3/32	3 5/32	3.8	4.0	4.9
T208D1	S(SM)-UKT208D1;H2308X	C(CM)-UKT208D1;H2308X	3	82	144	90	2.5	2.6	3.3
T208D1	S(SM)-UKT208ED1;HE2308X	C(CM)-UKT208ED1;HE2308X	1/8	3 7/32	5 21/32	3 17/32	5.5	5.7	7.3
T208D1	S(SM)-UKT208SD1;HS2308X	C(CM)-UKT208SD1;HS2308X							
T209D1	S(SM)-UKT209D1;H2309X	C(CM)-UKT209D1;H2309X	3	82	145.5	95	2.5	2.6	3.5
T209D1	S(SM)-UKT209AD1;HA2309	C(CM)-UKT209AD1;HA2309							
T209D1	S(SM)-UKT209ED1;HE2309X	C(CM)-UKT209ED1;HE2309X	1/8	3 7/32	5 23/32	3 3/4	5.5	5.7	7.7
T209D1	S(SM)-UKT209SD1;HS2309X	C(CM)-UKT209SD1;HS2309X							
T210D1	S(SM)-UKT210D1;H2310X	C(CM)-UKT210D1;H2310X	3	87	152	100	2.7	2.8	3.8
T210D1	S(SM)-UKT210SD1;HS2310	C(CM)-UKT210SD1;HS2310							
T210D1	S(SM)-UKT210AD1;HA2310	C(CM)-UKT210AD1;HA2310	1/8	3 7/16	5 31/32	3 15/16	6.0	6.2	8.4
T210D1	S(SM)-UKT210ED1;HE2310X	C(CM)-UKT210ED1;HE2310X							
T211D1	S(SM)-UKT211D1;H2311X	C(CM)-UKT211D1;H2311X	4	92	171.5	100	4.1	4.3	5.3
T211D1	S(SM)-UKT211SD1;HS2311	C(CM)-UKT211SD1;HS2311							
T211D1	S(SM)-UKT211AD1;HA2311	C(CM)-UKT211AD1;HA2311	5/32	3 5/8	6 3/4	3 15/16	9.0	9.5	12
T211D1	S(SM)-UKT211ED1;HE2311XY	C(CM)-UKT211ED1;HE2311XY							
T212D1	S(SM)-UKT212D1;H2312X	C(CM)-UKT212D1;H2312X	4	102	194	115	4.9	5.2	6.3
T212D1	S(SM)-UKT212SD1;HS2312	C(CM)-UKT212SD1;HS2312	5/32	4 1/32	7 5/8	4 17/32	11	11	14
T213D1	S(SM)-UKT213D1;H2313X	C(CM)-UKT213D1;H2313X	4	107	224	120	7.1	7.4	8.8
T213D1	S(SM)-UKT213AD1;HA2313	C(CM)-UKT213AD1;HA2313							
T213D1	S(SM)-UKT213ED1;HE2313X	C(CM)-UKT213ED1;HE2313X	5/32	4 7/32	8 13/16	4 23/32	16	16	19
T213D1	S(SM)-UKT213SD1;HS2313X	C(CM)-UKT213SD1;HS2313X							

Take-up units cast housing
Adapter type

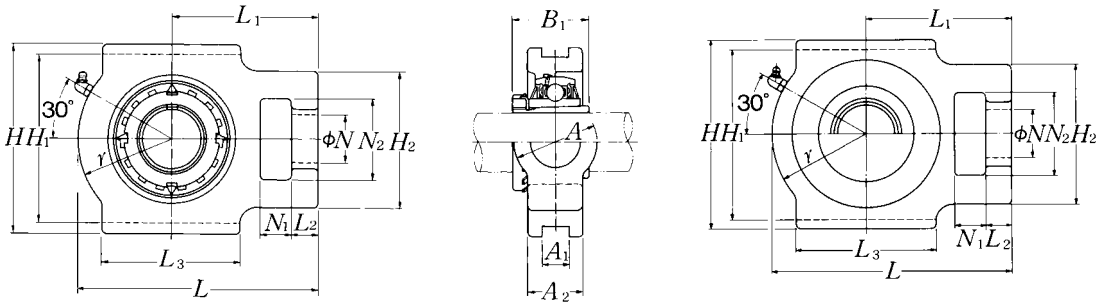

Pressed steel dust cover type
Open end: **S-UKT···D1**
Closed end: **SM-UKT···D1**

Shaft dia. mm / inch	Unit number 1) 2) 3)	Nominal dimensions mm / inch N_1	L_2	H_2	N_2	N	L_3	A_1	H_1	H	L	A_2	A	r	L_1	B_1	Bearing number 2) 3)
65	UKT215D1;H2315X	32	23	111	70	41	121	26	151	167	232	48	70	92	140	73	UK215D1;H2315X
2 7/16	UKT215D1;HA2315	1 1/4	29/32	4 3/8	2 3/4	1 5/8	4 3/4	1.024	5 15/16	6 9/16	9 1/8	1 7/8	2 3/4	3 5/8	5 1/2	2.874	UK215D1;HA2315
2 1/2	UKT215D1;HE2315X																UK215D1;HE2315X
70	UKT216D1;H2316X	32	23	111	70	41	121	26	165	184	235	51	70	95	140	78	UK216D1;H2316X
2 11/16	UKT216D1;HA2316	1 1/4	29/32	4 3/8	2 3/4	1 5/8	4 3/4	1.024	6 1/2	7 1/4	9 1/4	2	2 3/4	3 3/4	5 1/2	3.071	UK216D1;HA2316
2 3/4	UKT216D1;HE2316X																UK216D1;HE2316X
75	UKT217D1;H2317X	38	31	124	73	48	157	30	173	198	260	54	73	98	162	82	UK217D1;H2317X
2 15/16	UKT217D1;HA2317X	1 1/2	1 7/32	4 7/8	2 7/8	1 7/8	6 3/16	1.181	6 13/16	7 25/32	10 1/4	2 1/8	2 7/8	3 27/32	6 3/8	3.228	UK217D1;HA2317X
3	UKT217D1;HE2317X																UK217D1;HE2317X

Remarks: 1) These numbers indicate relubricatable type. If maintenance free type is needed, please order without suffix "D1".
2) Adapter number with suffix "X" means a narrow slot type adapter sleeve.
In this case the lock washer with the straight inner prong should be used.
3) For HE2311XY, screw thread pitch different from the standard is applied, because of the thin thread section of sleeve.
To distinguish it, a suffix "Y" is added.

Note: Please refer to page 36 for size of grease fitting.

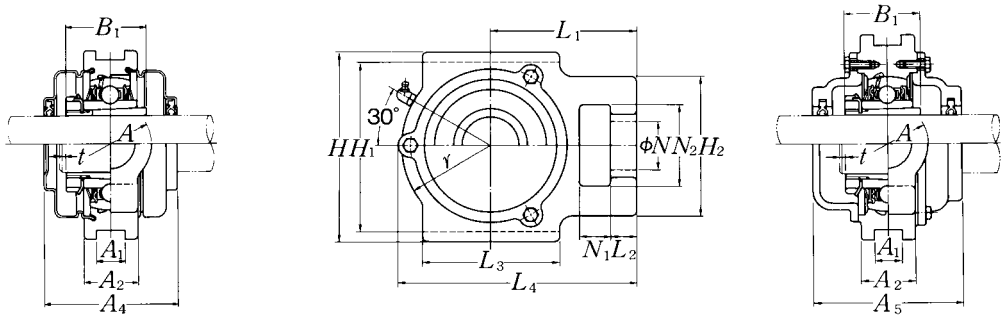

Cast dust cover type
Open end: **C-UKT···D1**
Closed end: **CM-UKT···D1**

Housing[1)] number	Unit number [1) 2) 3)] pressed steel dust cover type	Unit number [1) 2) 3)] cast dust cover type	Nominal dimensions mm t max.	A_4	inch L_4	A_5	Mass of unit kg UKT	S(SM)	lb C(CM)
T215D1	—	C(CM)-UKT215D1;H2315X	4	—	232	135	7.7	—	10
T215D1	—	C(CM)-UKT215AD1;HA2315	5/32	—	9 1/8	5 5/16	17	—	22
T215D1		C(CM)-UKT215ED1;HE2315X							
T216D1	—	C(CM)-UKT216D1;H2316X	4	—	235	145	8.7	—	12
T216D1	—	C(CM)-UKT216AD1;HA2316	5/32	—	9 1/4	5 23/32	19	—	26
T216D1		C(CM)-UKT216ED1;HE2316X							
T217D1	—	C(CM)-UKT217D1;H2317X	5	—	260	155	11	—	15
T217D1	—	C(CM)-UKT217AD1;HA2317X	13/64	—	10 1/4	6 3/32	24	—	33
T217D1		C(CM)-UKT217ED1;HE2317X							

Take-up units cast housing
Adapter type

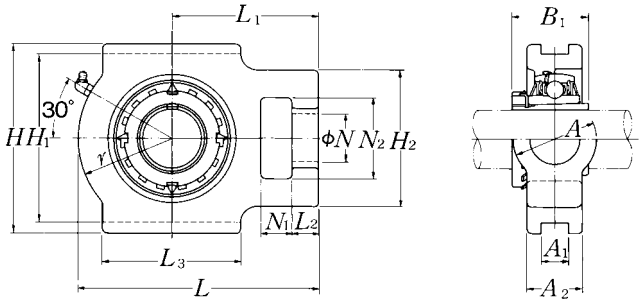

Shaft dia. mm / inch	Unit number 1) 2) 3)	Nominal dimensions mm / inch														
		N_1	L_2	H_2	N_2	N	L_3	A_1	H_1	H	L	A_2	A	r	L_1	B_1
20	UKT305D1;H2305X	16	14	62	36	26	65	12	80	89	122	26	36	46	76	35
3/4	UKT305D1;HE2305	5/8	9/16	2 7/16	1 13/32	1 1/32	2 9/16	0.472	3 5/32	3 1/2	4 13/16	1 1/32	1 13/32	1 13/16	3	1.378
25	UKT306D1;H2306X	18	16	70	41	28	74	16	90	100	137	28	41	52	85	38
7/8	UKT306D1;HS2306	23/32	5/8	2 3/4	1 5/8	1 3/32	2 29/32	0.630	3 35/64	3 15/16	5 13/32	1 3/32	1 5/8	2 1/16	3 11/32	1.496
1	UKT306D1;HE2306X															
30	UKT307D1;H2307X	20	17	75	45	30	80	16	100	111	150	32	45	56	94	43
1 1/8	UKT307D1;HS2307	25/32	21/32	2 15/16	1 25/32	1 3/16	3 5/32	0.630	3 15/16	4 3/8	5 29/32	1 1/4	1 25/32	2 7/32	3 11/16	1.693
35	UKT308D1;H2308X	22	19	83	50	32	89	18	112	124	162	34	50	62	100	46
1 1/4	UKT308D1;HE2308X	7/8	3/4	3 9/32	1 31/32	1 1/4	3 1/2	0.709	4 13/32	4 7/8	6 3/8	1 11/32	1 31/32	2 7/16	3 15/16	1.811
1 3/8	UKT308D1;HS2308X															
40	UKT309D1;H2309X	24	20	90	55	34	97	18	125	138	178	38	55	68	110	50
1 7/16	UKT309D1;HA2309															
1 1/2	UKT309D1;HE2309X	15/16	25/32	3 17/32	2 5/32	1 11/32	3 13/16	0.709	4 59/64	5 7/16	7	1 1/2	2 5/32	2 11/16	4 11/32	1.969
1 5/8	UKT309D1;HS2309X															
45	UKT310D1;H2310X	27	22	98	61	37	106	20	140	151	192	40	61	74	118	55
1 5/8	UKT310D1;HS2310															
1 11/16	UKT310D1;HA2310	1 1/16	7/8	3 27/32	2 13/32	1 15/32	4 3/16	0.787	5 33/64	5 15/16	7 9/16	1 9/16	2 13/32	2 29/32	4 21/32	2.165
1 3/4	UKT310D1;HE2310X															
50	UKT311D1;H2311X	29	23	105	66	39	115	22	150	163	207	44	66	80	127	59
1 7/8	UKT311D1;HS2311															
1 15/16	UKT311D1;HA2311	1 5/32	29/32	4 1/8	2 19/32	1 17/32	4 17/32	0.866	5 29/32	6 13/32	8 5/32	1 23/32	2 19/32	3 5/32	5	2.323
2	UKT311D1;HE2311XY															
55	UKT312D1;H2312X	31	25	113	71	41	123	22	160	178	220	46	71	85	135	62
2 1/8	UKT312D1;HS2312	1 7/32	31/32	4 7/16	2 25/32	1 5/8	4 27/32	0.866	6 19/64	7	8 21/32	1 13/16	2 25/32	3 11/32	5 5/16	2.441
60	UKT313D1;H2313X	32	27	116	70	43	134	26	170	190	238	50	80	92	146	65
2 3/16	UKT313D1;HA2313															
2 1/4	UKT313D1;HE2313X	1 1/4	1 1/16	4 9/16	2 3/4	1 11/16	5 9/32	1.024	6 11/16	7 15/32	9 3/8	1 31/32	3 5/32	3 5/8	5 3/4	2.559
2 3/8	UKT313D1;HS2313X															

Remarks: 1) These numbers indicate relubricatable type. If maintenance free type is needed, please order without suffix "D1".
2) Adapter number with suffix "X" means a narrow slot type adapter sleeve.
In this case the lock washer with the straight inner prong should be used.
3) For HE2311XY, screw thread pitch different from the standard is applied, because of the thin thread section of sleeve.
To distinguish it, a suffix "Y" is added.

Note: Please refer to page 36 for size of grease fitting.

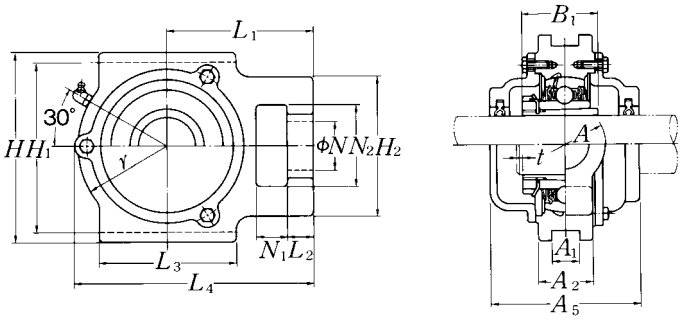

Cast dust cover type
Open end: **C-UKT···D1**
Closed end: **CM-UKT···D1**

Bearing number 2) 3)	Housing 1) number	Unit number 1) 2) 3) cast dust cover type	Nominal dimensions mm / inch: t max.	L_4	A_5	Mass of unit kg: UKT	lb: C(CM)
UK305D1;H2305X	T305D1	C(CM)-UKT305D1;H2305X	2	122	80	1.4	1.9
UK305D1;HE2305	T305D1	C(CM)-UKT305ED1;HE2305	5/64	4 13/16	3 5/32	3.1	4.2
UK306D1;H2306X	T306D1	C(CM)-UKT306D1;H2306X	2	139	85	1.8	2.5
UK306D1;HS2306	T306D1	C(CM)-UKT306SD1;HS2306	5/64	5 31/32	3 11/32	4.0	5.5
UK306D1;HE2306X	T306D1	C(CM)-UKT306ED1;HE2306X					
UK307D1;H2307X	T307D1	C(CM)-UKT307D1;H2307X	3	152	95	2.4	3.3
UK307D1;HS2307	T307D1	C(CM)-UKT307SD1;HS2307	1/8	5 31/32	3 3/4	5.3	7.3
UK308D1;H2308X	T308D1	C(CM)-UKT308D1;H2308X	3	164	105	3.0	4.3
UK308D1;HE2308X	T308D1	C(CM)-UKT308ED1;HE2308X	1/8	6 15/32	4 1/8	6.6	9.5
UK308D1;HS2308X	T308D1	C(CM)-UKT308SD1;HS2308X					
UK309D1;H2309X	T309D1	C(CM)-UKT309D1;H2309X	3	181	110	4.0	5.6
UK309D1;HA2309	T309D1	C(CM)-UKT309AD1;HA2309					
UK309D1;HE2309X	T309D1	C(CM)-UKT309ED1;HE2309X	1/8	7 1/8	4 11/32	8.8	12
UK309D1;HS2309X	T309D1	C(CM)-UKT309SD1;HS2309X					
UK310D1;H2310X	T310D1	C(CM)-UKT310D1;H2310X	3	197	120	5.1	7.1
UK310D1;HS2310	T310D1	C(CM)-UKT310SD1;HS2310					
UK310D1;HA2310	T310D1	C(CM)-UKT310AD1;HA2310	1/8	7 3/4	4 23/32	11	16
UK310D1;HE2310X	T310D1	C(CM)-UKT310ED1;HE2310X					
UK311D1;H2311X	T311D1	C(CM)-UKT311D1;H2311X	4	211	125	6.3	8.6
UK311D1;HS2311	T311D1	C(CM)-UKT311SD1;HS2311					
UK311D1;HA2311	T311D1	C(CM)-UKT311AD1;HA2311	5/32	8 5/16	4 29/32	14	19
UK311D1;HE2311XY	T311D1	C(CM)-UKT311ED1;HE2311XY					
UK312D1;H2312X	T312D1	C(CM)-UKT312D1;H2312X	4	227	135	7.6	10
UK312D1;HS2312	T312D1	C(CM)-UKT312SD1;HS2312	5/32	8 15/16	5 5/16	17	22
UK313D1;H2313X	T313D1	C(CM)-UKT313D1;H2313X	4	244	140	9.2	12
UK313D1;HA2313	T313D1	C(CM)-UKT313AD1;HA2313					
UK313D1;HE2313X	T313D1	C(CM)-UKT313ED1;HE2313X	5/32	9 19/32	5 1/2	20	26
UK313D1;HS2313X	T313D1	C(CM)-UKT313SD1;HS2313X					

Take-up units cast housing
Adapter type

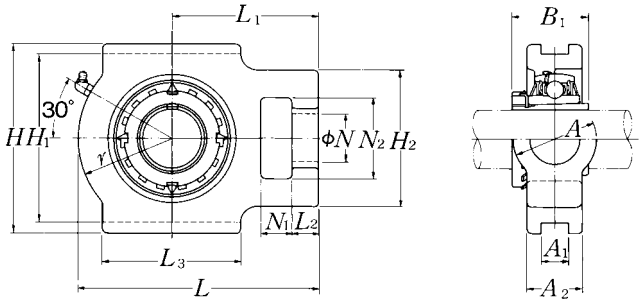

Shaft dia. mm / inch	Unit number 1) 2) 3)	Nominal dimensions mm / inch														
		N_1	L_2	H_2	N_2	N	L_3	A_1	H_1	H	L	A_2	A	r	L_1	B_1
65	UKT315D1;H2315X	36	27	132	85	46	150	26	192	216	262	55	90	102	160	73
2 7/16	UKT315D1;HA2315	1 13/32	1 1/16	5 3/16	3 11/32	1 13/16	5 29/32	1.024	7 9/16	8 1/2	10 5/16	2 5/32	3 17/32	4 1/32	6 5/16	2.874
2 1/2	UKT315D1;HE2315X															
70	UKT316D1;H2316X	42	30	150	98	53	160	30	204	230	282	60	102	108	174	78
2 11/16	UKT316D1;HA2316	1 21/32	1 3/16	5 29/32	3 27/32	2 3/32	6 5/16	1.181	8 1/32	9 1/16	11 3/32	2 3/8	4 1/32	4 1/4	6 27/32	3.071
2 3/4	UKT316D1;HE2316X															
75	UKT317D1;H2317X	42	32	152	98	53	170	32	214	240	298	64	102	115	183	82
2 15/16	UKT317D1;HA2317X	1 21/32	1 1/4	5 31/32	3 27/32	2 3/32	6 11/16	1.260	8 27/64	9 7/16	11 23/32	2 17/32	4 1/32	4 17/32	7 7/32	3.228
3	UKT317D1;HE2317X															
80	UKT318D1;H2318X	46	32	160	106	57	175	32	228	255	312	66	110	120	192	86
3 3/16	UKT318D1;HA2318X	1 13/16	1 1/4	6 5/16	4 3/16	2 1/4	6 7/8	1.260	8 31/32	10 1/32	12 9/32	2 19/32	4 11/32	4 23/32	7 9/16	3.386
85	UKT319D1;H2319X	46	33	165	106	57	180	35	240	270	322	72	110	125	197	90
3 1/4	UKT319D1;HE2319X	1 13/16	1 5/16	6 1/2	4 3/16	2 1/4	7 3/32	1.378	9 29/64	10 5/8	12 11/16	2 27/32	4 11/32	4 29/32	7 3/4	3.543
90	UKT320D1;H2320X	48	34	175	115	59	200	35	260	290	345	75	120	135	210	97
3 7/16	UKT320D1;HA2320	1 7/8	1 11/32	6 7/8	4 17/32	2 5/16	7 7/8	1.378	10 15/64	11 13/32	13 19/32	2 15/16	4 23/32	5 5/16	8 9/32	3.819
3 1/2	UKT320D1;HE2320X															
100	UKT322D1;H2322X	52	40	185	125	65	215	38	285	320	385	80	130	150	235	105
110	UKT324D1;H2324X	60	44	210	140	70	230	45	320	355	432	90	140	165	267	112
115	UKT326D1;H2326	65	47	220	150	75	240	50	350	385	465	100	150	180	285	121
125	UKT328D1;H2328	70	52	230	160	80	255	50	380	415	515	100	155	200	315	131

Remarks: 1) These numbers indicate relubricatable type. If maintenance free type is needed, please order without suffix "D1".
2) Adapter number with suffix "X" means a narrow slot type adapter sleeve.
In this case the lock washer with the straight inner prong should be used.
3) For HE2311XY, screw thread pitch different from the standard is applied, because of the thin thread section of sleeve.
To distinguish it, a suffix "Y" is added.

Note: Please refer to page 36 for size of grease fitting.

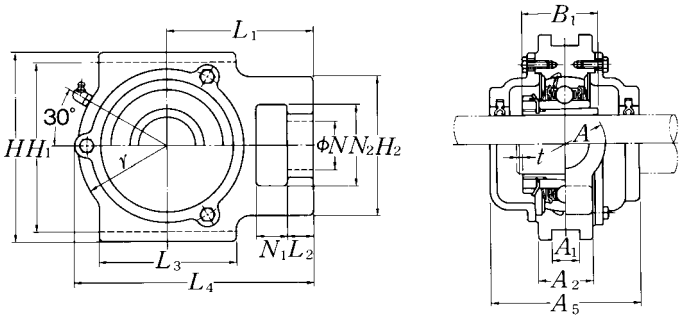

Cast dust cover type
Open end: **C-UKT···D1**
Closed end: **CM-UKT···D1**

Bearing number 2) 3)	Housing 1) number	Unit number 1) 2) 3) cast dust cover type	Nominal dimensions mm / inch			Mass of unit kg / lb	
			t max.	L_4	A_5	UKT	C(CM)
UK315D1;H2315X	T315D1	C(CM)-UKT315D1;H2315X	4	268	150	13	17
UK315D1;HA2315	T315D1	C(CM)-UKT315AD1;HA2315	5/32	10 9/16	5 29/32	29	37
UK315D1;HE2315X	T315D1	C(CM)-UKT315ED1;HE2315X					
UK316D1;H2316X	T316D1	C(CM)-UKT316D1;H2316X	4	287	155	16	21
UK316D1;HA2316	T316D1	C(CM)-UKT316AD1;HA2316	5/32	11 5/16	6 3/32	35	46
UK316D1;HE2316X	T316D1	C(CM)-UKT316ED1;HE2316X					
UK317D1;H2317X	T317D1	C(CM)-UKT317D1;H2317X	5	303	170	19	25
UK317D1;HA2317X	T317D1	C(CM)-UKT317AD1;HA2317X	13/64	11 15/16	6 11/16	42	55
UK317D1;HE2317X	T317D1	C(CM)-UKT317ED1;HE2317X					
UK318D1;H2318X	T318D1	C(CM)-UKT318D1;H2318X	5	317	170	21	28
UK318D1;HA2318X	T318D1	C(CM)-UKT318AD1;HA2318X	13/64	12 15/32	6 11/16	46	62
UK319D1;H2319X	T319D1	C(CM)-UKT319D1;H2319X	5	327	180	25	32
UK319D1;HE2319X	T319D1	C(CM)-UKT319ED1;HE2319X	13/64	12 7/8	7 3/32	55	71
UK320D1;H2320X	T320D1	C(CM)-UKT320D1;H2320X	5	350	190	30	39
UK320D1;HA2320	T320D1	C(CM)-UKT320AD1;HA2320	13/64	13 25/32	7 15/32	66	86
UK320D1;HE2320X	T320D1	C(CM)-UKT320ED1;HE2320X					
UK322D1;H2322X	T322D1	C(CM)-UKT322D1;H2322X	5	395	200	40	51
UK324D1;H2324X	T324D1	C(CM)-UKT324D1;H2324X	5	439	215	43	69
UK326D1;H2326	T326D1	C(CM)-UKT326D1;H2326	6	476	225	69	85
UK328D1;H2328	T328D1	C(CM)-UKT328D1;H2328	6	519	235	88	107

Take-up units cast housing
Adapter type

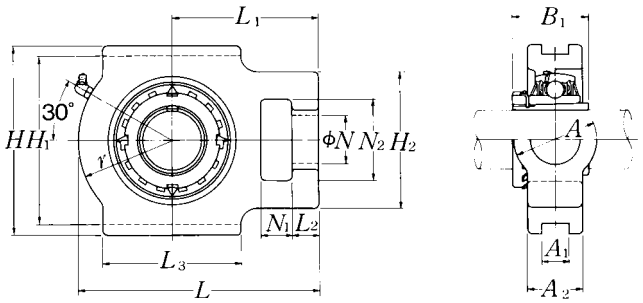

Shaft dia. mm / inch	Unit number 1) 2) 3)	Nominal dimensions (mm / inch) N_1	L_2	H_2	N_2	N	L_3	A_1	H_1	H	L	A_2	A	r	L_1	B_1
20	UKTX05D1;H2305X	16	12	56	37	22	57	12	89	102	113	28	37	43	70	35
3/4	UKTX05D1;HE2305	5/8	15/32	2 7/32	1 15/32	7/8	2 1/4	0.472	3 1/2	4 1/32	4 7/16	1 3/32	1 15/32	1 11/16	2 3/4	1.378
25	UKTX06D1;H2306X	16	15	64	37	22	64	12	89	102	129	30	37	51	78	38
7/8	UKTX06D1;HS2306	5/8	19/32	2 17/32	1 15/32	7/8	2 17/32	0.472	3 1/2	4 1/32	5 3/32	1 3/16	1 15/32	2	3 1/16	1.496
1	UKTX06D1;HE2306X															
30	UKTX07D1;H2307X	19	17	83	49	29	83	16	102	114	144	36	49	56	88	43
1 1/8	UKTX07D1;HS2307	3/4	21/32	3 9/32	1 15/16	1 5/32	3 9/32	0.630	4 1/64	4 1/2	5 21/32	1 13/32	1 15/16	2 7/32	3 15/32	1.693
35	UKTX08D1;H2308X	19	17	83	49	29	83	16	102	117	144	36	49	57	87	46
1 1/4	UKTX08D1;HE2308X	3/4	21/32	3 9/32	1 15/16	1 5/32	3 9/32	0.630	4 1/64	4 19/32	5 21/32	1 13/32	1 15/16	2 1/4	3 7/16	1.811
1 3/8	UKTX08D1;HS2308X															
40	UKTX09D1;H2309X	19	18	83	49	29	86	16	102	117	151	38	49	59	92	50
1 7/16	UKTX09D1;HA2309															
1 1/2	UKTX09D1;HE2309X	3/4	23/32	3 9/32	1 15/16	1 5/32	3 3/8	0.630	4 1/64	4 19/32	5 15/16	1 1/2	1 15/16	2 5/16	3 5/8	1.969
1 5/8	UKTX09D1;HS2309X															
45	UKTX10D1;H2310X	25	21	102	64	35	95	22	130	146	171	42	64	65	106	55
1 5/8	UKTX10D1;HS2310															
1 11/16	UKTX10D1;HA2310	31/32	13/16	4 1/32	2 17/32	1 3/8	3 3/4	0.866	5 1/8	5 3/4	6 23/32	1 21/32	2 17/32	2 9/16	4 3/16	2.165
1 3/4	UKTX10D1;HE2310X															
50	UKTX11D1;H2311X	32	21	102	64	35	102	22	130	146	194	44	64	75	119	59
1 7/8	UKTX11D1;HS2311															
1 15/16	UKTX11D1;HA2311	1 1/4	13/16	4 1/32	2 17/32	1 3/8	4 1/32	0.866	5 1/8	5 3/4	7 5/8	1 23/32	2 17/32	2 15/16	4 11/16	2.323
2	UKTX11D1;HE2311XY															
55	UKTX12D1;H2312X	32	23	111	70	41	121	26	151	167	224	48	70	87	137	62
2 1/8	UKTX12D1;HS2312	1 1/4	29/32	4 3/8	2 3/4	1 5/8	4 3/4	1.024	5 15/16	6 9/16	8 13/16	1 7/8	2 3/4	3 7/16	5 13/32	2.441
60	UKTX13D1;H2313X	32	23	111	70	41	121	26	151	167	224	48	70	87	137	65
2 3/16	UKTX13D1;HA2313															
2 1/4	UKTX13D1;HE2313X	1 1/4	29/32	4 3/8	2 3/4	1 5/8	4 3/4	1.024	5 15/16	6 9/16	8 13/16	1 7/8	2 3/4	3 7/16	5 13/32	2.559
2 3/8	UKTX13D1;HS2313X															

Remarks: 1) These numbers indicate relubricatable type. If maintenance free type is needed, please order without suffix "D1".
2) Adapter number with suffix "X" means a narrow slot type adapter sleeve.
In this case the lock washer with the straight inner prong should be used.
3) For HE2311XY, screw thread pitch different from the standard is applied, because of the thin thread section of sleeve.
To distinguish it, a suffix "Y" is added.

Note: Please refer to page 36 for size of grease fitting.

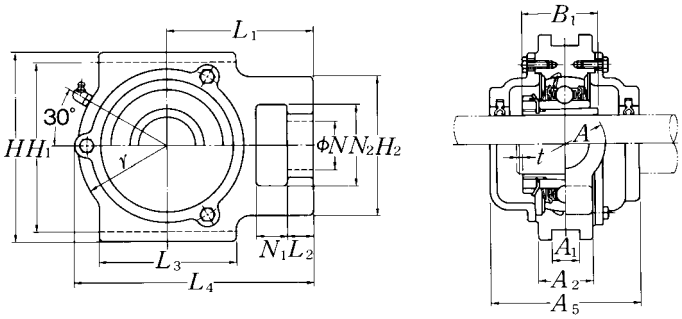

Cast dust cover type
Open end: **C-UKTX…D1**
Closed end: **CM-UKTX…D1**

Bearing number 2) 3)	Housing 1) number	Unit number 1) 2) 3) cast dust cover type	Nominal dimensions mm		inch	Mass of unit kg	lb
			t	L_4	A_5	UKTX	C(CM)
UKX05D1;H2305X	TX05D1	C(CM)-UKTX05D1;H2305X	2	113.5	75	1.3	1.8
UKX05D1;HE2305	TX05D1	C(CM)-UKTX05ED1;HE2305	5/64	4 15/32	2 15/16	2.9	4.0
UKX06D1;H2306X	TX06D1	C(CM)-UKTX06D1;H2306X	2	129	80	1.7	2.2
UKX06D1;HS2306	TX06D1	C(CM)-UKTX06SD1;HS2306	5/64	5 3/32	3 5/32	3.8	4.9
UKX06D1;HE2306X	TX06D1	C(CM)-UKTX06ED1;HE2306X					
UKX07D1;H2307X	TX07D1	C(CM)-UKTX07D1;H2307X	3	144	90	2.7	3.5
UKX07D1;HS2307	TX07D1	C(CM)-UKTX07SD1;HS2307	1/8	5 21/32	3 17/32	6.0	7.7
UKX08D1;H2308X	TX08D1	C(CM)-UKTX08D1;H2308X	3	144.5	95	2.8	3.7
UKX08D1;HE2308X	TX08D1	C(CM)-UKTX08ED1;HE2308X	1/8	5 11/16	3 3/4	6.2	8.2
UKX08D1;HS2308X	TX08D1	C(CM)-UKTX08SD1;HS2308X					
UKX09D1;H2309X	TX09D1	C(CM)-UKTX09D1;H2309X	3	152	100	2.7	3.8
UKX09D1;HA2309	TX09D1	C(CM)-UKTX09AD1;HA2309					
UKX09D1;HE2309X	TX09D1	C(CM)-UKTX09ED1;HE2309X	1/8	5 31/32	3 15/16	6.0	8.4
UKX09D1;HS2309X	TX09D1	C(CM)-UKTX09SD1;HS2309X					
UKX10D1;H2310X	TX10D1	C(CM)-UKTX10D1;H2310X	3	171.5	100	4.3	5.5
UKX10D1;HS2310	TX10D1	C(CM)-UKTX10SD1;HS2310					
UKX10D1;HA2310	TX10D1	C(CM)-UKTX10AD1;HA2310	1/8	6 3/4	3 15/16	9.5	12
UKX10D1;HE2310X	TX10D1	C(CM)-UKTX10ED1;HE2310X					
UKX11D1;H2311X	TX11D1	C(CM)-UKTX11D1;H2311X	4	194	115	5.1	6.6
UKX11D1;HS2311	TX11D1	C(CM)-UKTX11SD1;HS2311					
UKX11D1;HA2311	TX11D1	C(CM)-UKTX11AD1;HA2311	5/32	7 5/8	4 17/32	11	15
UKX11D1;HE2311XY	TX11D1	C(CM)-UKTX11ED1;HE2311XY					
UKX12D1;H2312X	TX12D1	C(CM)-UKTX12D1;H2312X	4	224	120	7.2	9.0
UKX12D1;HS2312	TX12D1	C(CM)-UKTX12SD1;HS2312	5/32	8 13/16	4 23/32	16	20
UKX13D1;H2313X	TX13D1	C(CM)-UKTX13D1;H2313X	4	224	135	7.2	9.5
UKX13D1;HA2313	TX13D1	C(CM)-UKTX13AD1;HA2313					
UKX13D1;HE2313X	TX13D1	C(CM)-UKTX13ED1;HE2313X	5/32	8 13/16	5 5/16	16	21
UKX13D1;HS2313X	TX13D1	C(CM)-UKTX13SD1;HS2313X					

Take-up units cast housing
Adapter type

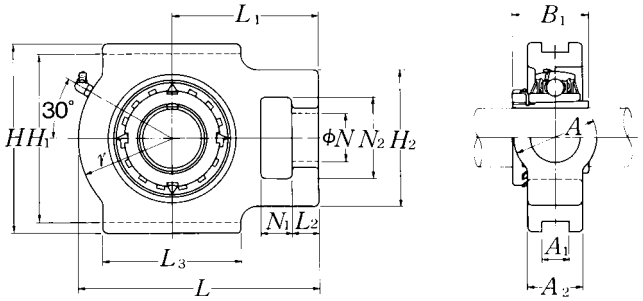

Shaft dia. mm / inch	Unit number 1) 2) 3)	Nominal dimensions														
		mm								inch						
		N_1	L_2	H_2	N_2	N	L_3	A_1	H_1	H	L	A_2	A	r	L_1	B_1
65	UKTX15D1;H2315X	32	23	111	70	41	121	28	165	184	235	48	70	95	140	73
2 7/16	UKTX15D1;HA2315	1 1/4	29/32	4 3/8	2 3/4	1 5/8	4 3/4	1.102	6 1/2	7 1/4	9 1/4	1 7/8	2 3/4	3 3/4	5 1/2	2.874
2 1/2	UKTX15D1;HE2315X															
70	UKTX16D1;H2316X	38	30	124	73	48	157	28	173	198	260	54	73	98	162	78
2 11/16	UKTX16D1;HA2316	1 1/2	1 3/16	4 7/8	2 7/8	1 7/8	6 3/16	1.102	6 13/16	7 25/32	10 1/4	2 1/8	2 7/8	3 27/32	6 3/8	3.071
2 3/4	UKTX16D1;HE2316X															
75	UKTX17D1;H2317X	38	30	124	73	48	157	28	173	198	260	54	73	98	162	82
2 15/16	UKTX17D1;HA2317X	1 1/2	1 3/16	4 7/8	2 7/8	1 7/8	6 3/16	1.102	6 13/16	7 25/32	10 1/4	2 1/8	2 7/8	3 27/32	6 3/8	3.228
3	UKTX17D1;HE2317X															

Remarks: 1) These numbers indicate relubricatable type. If maintenance free type is needed, please order without suffix "D1".
2) Adapter number with suffix "X" means a narrow slot type adapter sleeve.
In this case the lock washer with the straight inner prong should be used.
3) For HE2311XY, screw thread pitch different from the standard is applied, because of the thin thread section of sleeve.
To distinguish it, a suffix "Y" is added.

Note: Please refer to page 36 for size of grease fitting.

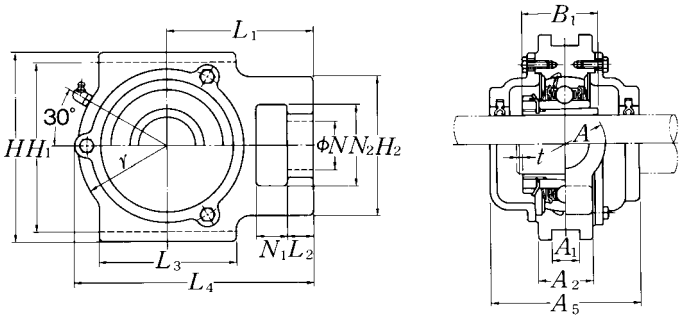

Cast dust cover type
Open end: **C-UKTX…D1**
Closed end: **CM-UKTX…D1**

Bearing number 2) 3)	Housing 1) number	Unit number 1) 2) 3) cast dust cover type	Nominal dimensions			Mass of unit	
			mm		inch	kg	lb
			t	L_4	A_5	UKTX	C(CM)
UKX15D1;H2315X	TX15D1	**C(CM)-UKTX15D1;H2315X**	4	235	145	8.5	11
UKX15D1;HA2315	TX15D1	**C(CM)-UKTX15AD1;HA2315**	5/32	9 1/4	5 23/32	19	24
UKX15D1;HE2315X	TX15D1	**C(CM)-UKTX15ED1;HE2315X**					
UKX16D1;H2316X	TX16D1	**C(CM)-UKTX16D1;H2316X**	4	260	155	11	14
UKX16D1;HA2316	TX16D1	**C(CM)-UKTX16AD1;HA2316**	5/32	10 1/4	6 3/32	24	31
UKX16D1;HE2316X	TX16D1	**C(CM)-UKTX16ED1;HE2316X**					
UKX17D1;H2317X	TX17D1	**C(CM)-UKTX17D1;H2317X**	5	262	165	11	15
UKX17D1;HA2317X	TX17D1	**C(CM)-UKTX17AD1;HA2317X**	13/64	10 5/16	6 1/2	24	33
UKX17D1;HE2317X	TX17D1	**C(CM)-UKTX17ED1;HE2317X**					

Cartridge units cast housing
Adapter type

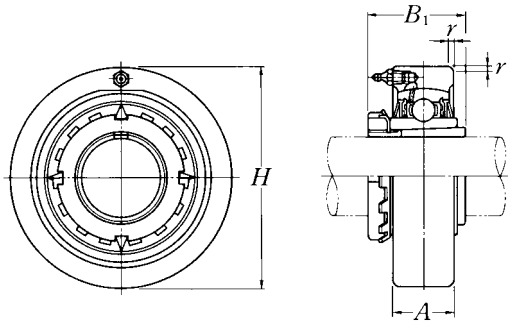

Shaft dia. mm / inch	Unit number 1) 2) 3)	Nominal dimensions H (mm / inch)	A (mm / inch)	r (mm / inch)	B1 (mm / inch)	Bearing number 2) 3)	Housing 1) number	Mass of unit kg / lb
20	UKC205D1;H2305X	80	22	2	35	UK205D1;H2305X	C205D1	0.7
3/4	UKC205D1;HE2305	3.1496	55/64	0.079	1.378	UK205D1;HE2305	C205D1	1.5
25	UKC206D1;H2306X	85	27	2	38	UK206D1;H2306X	C206D1	0.9
7/8	UKC206D1;HS2306	3.3465	1 1/16	0.079	1.496	UK206D1;HS2306	C206D1	2.0
1	UKC206D1;HE2306X					UK206D1;HE2306X	C206D1	
30	UKC207D1;H2307X	90	28	2	43	UK207D1;H2307X	C207D1	1.0
1 1/8	UKC207D1;HS2307	3.5433	1 7/64	0.079	1.693	UK207D1;HS2307	C207D1	2.2
35	UKC208D1;H2308X	100	30	2.5	46	UK208D1;H2308X	C208D1	1.3
1 1/4	UKC208D1;HE2308X	3.9370	1 3/16	0.098	1.811	UK208D1;HE2308X	C208D1	2.9
1 3/8	UKC208D1;HS2308X					UKC208D1;HS2308X	C208D1	
40	UKC209D1;H2309X	110	31	2.5	50	UK209D1;H2309X	C209D1	1.6
1 7/16	UKC209D1;HA2309					UK209D1;HA2309	C209D1	
1 1/2	UKC209D1;HE2309X	4.3307	1 7/32	0.098	1.969	UK209D1;HE2309X	C209D1	3.5
1 5/8	UKC209D1;HS2309X					UK209D1;HS2309X	C209D1	
45	UKC210D1;H2310X	120	33	2.5	55	UK210D1;H2310X	C210D1	2.1
1 5/8	UKC210D1;HS2310					UK210D1;HS2310	C210D1	
1 11/16	UKC210D1;HA2310	4.7244	1 19/64	0.098	2.165	UK210D1;HA2310	C210D1	4.6
1 3/4	UKC210D1;HE2310X					UK210D1;HE2310X	C210D1	
50	UKC211D1;H2311X	125	35	2.5	59	UK211D1;H2311X	C211D1	2.3
1 7/8	UKC211D1;HS2311					UK211D1;HS2311	C211D1	
1 15/16	UKC211D1;HA2311	4.9213	1 3/8	0.098	2.323	UK211D1;HA2311	C211D1	5.1
2	UKC211D1;HE2311XY					UK211D1;HE2311XY	C211D1	
55	UKC212D1;H2312X	130	38	2.5	62	UK212D1;H2312X	C212D1	2.6
2 1/8	UKC212D1;HS2312	5.1181	1 1/2	0.098	2.441	UK212D1;HS2312	C212D1	5.7
60	UKC213D1;H2313X	140	40	3	65	UK213D1;H2313X	C213D1	3.2
2 3/16	UKC213D1;HA2313					UK213D1;HA2313	C213D1	
2 1/4	UKC213D1;HE2313X	5.5118	1 37/64	0.118	2.559	UK213D1;HE2313X	C213D1	7.1
2 3/8	UKC213D1;HS2313X					UK213D1;HS2313X	C213D1	

Remarks: 1) These numbers indicate relubricatable type. If maintenance free type is needed, please order without suffix "D1".
2) Adapter number with suffix "X" means a narrow slot type adapter sleeve.
In this case the lock washer with the straight inner prong should be used.
3) For HE2311XY, screw thread pitch different from the standard is applied, because of the thin thread section of sleeve.
To distinguish it, a suffix "Y" is added.

Note: Please refer to page 36 for size of grease fitting.

Cartridge units cast housing
Adapter type

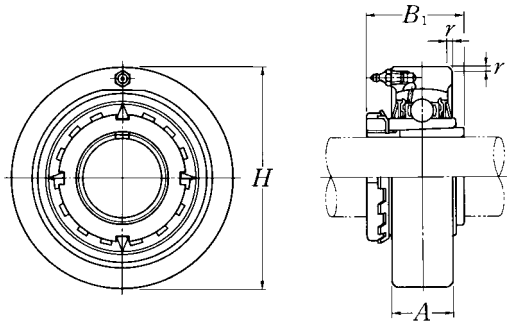

Shaft dia. mm / inch	Unit number 1) 2) 3)	Nominal dimensions H (mm / inch)	A (mm / inch)	r (mm / inch)	B1 (mm / inch)	Bearing number 2) 3)	Housing 1) number	Mass of unit kg / lb
20	UKC305D1;H2305X	90	26	2.5	35	UK305D1;H2305X	C305D1	1.0
3/4	UKC305D1;HE2305	3.5433	1 1/32	0.098	1.378	UK305D1;HE2305	C305D1	2.2
25	UKC306D1;H2306X	100	28	2.5	38	UK306D1;H2306X	C306D1	1.3
7/8	UKC306D1;HS2306	3.9370	1 7/64	0.098	1.496	UK306D1;HS2306	C306D1	2.9
1	UKC306D1;HE2306X					UK306D1;HE2306X	C306D1	
30	UKC307D1;H2307X	110	32	3	43	UK307D1;H2307X	C307D1	1.8
1 1/8	UKC307D1;HS2307	4.3307	1 17/64	0.118	1.693	UK307D1;HS2307	C307D1	4.0
35	UKC308D1;H2308X	120	34	3	46	UK308D1;H2308X	C308D1	2.2
1 1/4	UKC308D1;HE2308X	4.7244	1 11/32	0.118	1.811	UK308D1;HE2308X	C308D1	4.9
1 3/8	UKC308D1;HS2308X					UK308D1;HS2308X	C308D1	
40	UKC309D1;H2309X	130	38	3.5	50	UK309D1;H2309X	C309D1	2.7
1 7/16	UKC309D1;HA2309					UK309D1;HA2309	C309D1	
1 1/2	UKC309D1;HE2309X	5.1181	1 1/2	0.138	1.969	UK309D1;HE2309X	C309D1	6.0
1 5/8	UKC309D1;HS2309X					UK309D1;HS2309X	C309D1	
45	UKC310D1;H2310X	140	40	3.5	55	UK310D1;H2310X	C310D1	3.4
1 5/8	UKC310D1;HS2310					UK310D1;HS2310	C310D1	
1 11/16	UKC310D1;HA2310	5.5118	1 37/64	0.138	2.165	UK310D1;HA2310	C310D1	7.5
1 3/4	UKC310D1;HE2310X					UK310D1;HE2310X	C310D1	
50	UKC311D1;H2311X	150	44	3.5	59	UK311D1;H2311X	C311D1	4.0
1 7/8	UKC311D1;HS2311					UK311D1;HS2311	C311D1	
1 15/16	UKC311D1;HA2311	5.9055	1 47/64	0.138	2.323	UK311D1;HA2311	C311D1	8.8
2	UKC311D1;HE2311XY					UK311D1;HE2311XY	C311D1	
55	UKC312D1;H2312X	160	46	3.5	62	UK312D1;H2312X	C312D1	4.8
2 1/8	UKC312D1;HS2312	6.2992	1 13/16	0.138	2.441	UK312D1;HS2312	C312D1	11
60	UKC313D1;H2313X	170	50	3.5	65	UK313D1;H2313X	C313D1	5.6
2 3/16	UKC313D1;HA2313					UK313D1;HA2313	C313D1	
2 1/4	UKC313D1;HE2313X	6.6929	1 31/32	0.138	2.559	UK313D1;HE2313X	C313D1	12
2 3/8	UKC313D1;HS2313X					UK313D1;HS2313X	C313D1	

Remarks: 1) These numbers indicate relubricatable type. If maintenance free type is needed, please order without suffix "D1".
2) Adapter number with suffix "X" means a narrow slot type adapter sleeve.
In this case the lock washer with the straight inner prong should be used.
3) For HE2311XY, screw thread pitch different from the standard is applied, because of the thin thread section of sleeve.
To distinguish it, a suffix "Y" is added.

Note: Please refer to page 36 for size of grease fitting.

Cartridge units cast housing
Adapter type

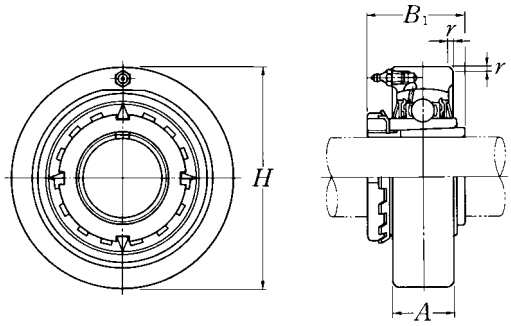

Shaft dia. mm / inch	Unit number 1) 2) 3)	Nominal dimensions H	A (mm / inch)	r	B_1	Bearing number 2) 3)	Housing 1) number	Mass of unit kg / lb
65 2 7/16 2 1/2	UKC315D1;H2315X UKC315D1;HA2315 UKC315D1;HE2315X	190 7.4803	55 2 11/16	4 0.157	73 2.874	UK315D1;H2315X UK315D1;HA2315 UK315D1;HE2315X	C315D1 C315D1 C315D1	7.9 17
70 2 11/16 2 3/4	UKC316D1;H2316X UKC316D1;HA2316 UKC316D1;HE2316X	200 7.8740	60 2 23/64	4 0.157	78 3.071	UK316D1;H2316X UK316D1;HA2316 UK316D1;HE2316X	C316D1 C316D1 C316D1	9.4 20
75 2 15/16 3	UKC317D1;H2317X UKC317D1;HA2317X UKC317D1;HE2317X	215 8.4646	64 2 33/64	4 0.157	82 3.228	UK317D1;H2317X UK317D1;HA2317X UK317D1;HE2317X	C317D1 C317D1 C317D1	11 24
80 3 3/16	UKC318D1;H2318X UKC318D1;HA2318X	225 8.8583	66 2 19/32	4 0.157	86 3.386	UK318D1;H2318X UK318D1;HA2318X	C318D1 C318D1	13 29
85 3 1/4	UKC319D1;H2319X UKC319D1;HE2319X	240 9.4488	72 2 53/64	4 0.157	90 3.543	UK319D1;H2319X UK319D1;HE2319X	C319D1 C319D1	16 35
90 3 7/16 3 1/2	UKC320D1;H2320X UKC320D1;HA2320 UKC320D1;HE2320X	260 10.2362	75 2 61/64	4 0.157	97 3.819	UK320D1;H2320X UK320D1;HA2320 UK320D1;HE2320X	C320D1 C320D1 C320D1	20 44
100	UKC322D1;H2322X	300	80	5	105	UK322D1;H2322X	C322D1	29
110	UKC324D1;H2324X	320	90	5	112	UK324D1;H2324X	C324D1	35
115	UKC326D1;H2326	340	100	5	121	UK326D1;H2326	C326D1	43
125	UKC328D1;H2328	360	100	5	131	UK328D1;H2328	C328D1	50

Remarks: 1) These numbers indicate relubricatable type. If maintenance free type is needed, please order without suffix "D1".
2) Adapter number with suffix "X" means a narrow slot type adapter sleeve.
In this case the lock washer with the straight inner prong should be used.
3) For HE2311XY, screw thread pitch different from the standard is applied, because of the thin thread section of sleeve.
To distinguish it, a suffix "Y" is added.

Note: Please refer to page 36 for size of grease fitting.

Cartridge units cast housing
Adapter type

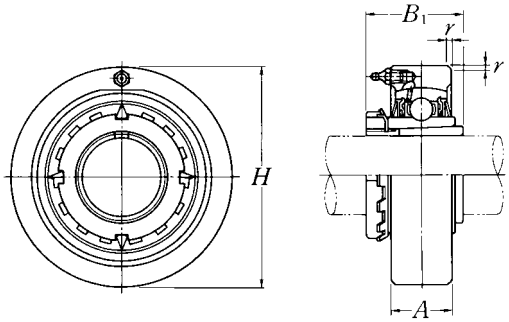

Shaft dia. mm / inch	Unit number 1) 2) 3)	Nominal dimensions H	A (mm)	r (inch)	B1	Bearing number 2) 3)	Housing 1) number	Mass of unit kg / lb
20	UKCX05D1;H2305X	90	27	2	35	UKX05D1;H2305X	CX05D1	1.1
3/4	UKCX05D1;HE2305	3.5433	1 1/16	0.079	1.378	UKX05D1;HE2305	CX05D1	2.4
25	UKCX06D1;H2306X	100	30	2.5	38	UKX06D1;H2306X	CX06D1	1.4
7/8	UKCX06D1;HS2306	3.9370	1 3/16	0.098	1.496	UKX06D1;HS2306	CX06D1	3.1
1	UKCX06D1;HE2306X					UKX06D1;HE2306X	CX06D1	
30	UKCX07D1;H2307X	110	34	2.5	43	UKX07D1;H2307X	CX07D1	1.8
1 1/8	UKCX07D1;HS2307	4.3307	1 11/32	0.098	1.693	UKX07D1;HS2307	CX07D1	4.0
35	UKCX08D1;H2308X	120	38	2.5	46	UKX08D1;H2308X	CX08D1	2.5
1 1/4	UKCX08D1;HE2308X	4.7244	1 1/2	0.098	1.811	UKX08D1;HE2308X	CX08D1	5.5
1 3/8	UKCX08D1;HS2308X					UKX08D1;HS2308X	CX08D1	
40	UKCX09D1;H2309X	120	38	2.5	50	UKX09D1;H2309X	CX09D1	2.2
1 7/16	UKCX09D1;HA2309					UKX09D1;HA2309	CX09D1	
1 1/2	UKCX09D1;HE2309X	4.7244	1 1/2	0.098	1.969	UKX09D1;HE2309X	CX09D1	4.9
1 5/8	UKCX09D1;HS2309X					UKX09D1;HS2309X	CX09D1	
45	UKCX10D1;H2310X	130	40	2.5	55	UKX10D1;H2310X	CX10D1	2.7
1 5/8	UKCX10D1;HS2310					UKX10D1;HS2310	CX10D1	
1 11/16	UKCX10D1;HA2310	5.1181	1 37/64	0.098	2.165	UKX10D1;HA2310	CX10D1	6.0
1 3/4	UKCX10D1;HE2310X					UKX10D1;HE2310X	CX10D1	
50	UKCX11D1;H2311X	150	42	3	59	UKX11D1;H2311X	CX11D1	4.0
1 7/8	UKCX11D1;HS2311					UKX11D1;HS2311	CX11D1	
1 15/16	UKCX11D1;HA2311	5.9055	1 21/32	0.118	2.323	UKX11D1;HA2311	CX11D1	8.8
2	UKCX11D1;HE2311XY					UKX11D1;HE2311X	CX11D1	
55	UKCX12D1;H2312X	160	44	3	62	UKX12D1;H2312X	CX12D1	3.9
2 1/8	UKCX12D1;HS2312	6.2992	1 47/64	0.118	2.441	UKX12D1;HS2312	CX12D1	8.6

Remarks: 1) These numbers indicate relubricatable type. If maintenance free type is needed, please order without suffix "D1".
2) Adapter number with suffix "X" means a narrow slot type adapter sleeve.
In this case the lock washer with the straight inner prong should be used.
3) For HE2311XY, screw thread pitch different from the standard is applied, because of the thin thread section of sleeve.
To distinguish it, a suffix "Y" is added.

Note: Please refer to page 36 for size of grease fitting.

Take-up stretcher units
Set screw type

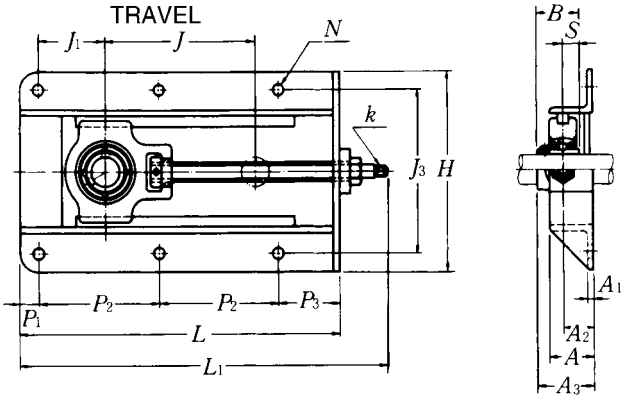

Shaft dia. mm	Unit [1] number	Nominal dimensions mm																
		L	H	J	J_1	J_3	A_1	A_2	A	P_1	P_2	P_3	N	L_1	A_3	B	S	k square
12	UCT201-15	317	199	150	69	154	6	30	50	19	117	64	12	370	48.3	31	12.7	9
15	UCT202-15	317	199	150	69	154	6	30	50	19	117	64	12	370	48.3	31	12.7	9
17	UCT203-15	317	199	150	69	154	6	30	50	19	117	64	12	370	48.3	31	12.7	9
20	UCT204-15	317	199	150	69	154	6	30	50	19	117	64	12	370	48.3	31	12.7	9
25	UCT205-15	317	199	150	68	154	6	30	50	19	117	64	12	370	49.8	34.1	14.3	9
30	UCT206-15	337	212	150	73	166	6	32	50	19	127	64	12	393	54.2	38.1	15.9	10
35	UCT207-23	429	212	230	80	166	6	32	50	19	173	64	12	485	57.4	42.9	17.5	10
40	UCT208-30	520	233	300	88	192	6	32	50	22	217	64	12	596	62.2	49.2	19	15
45	UCT209-30	520	233	300	88	192	6	32	50	22	217	64	12	596	62.2	49.2	19	15
50	UCT210-30	524	233	300	92	192	6	35	50	22	219	64	15	599	67.6	51.6	19	15
55	UCT211-30	542	285	300	93	240	8	38	65	22	230	60	15	630	71.4	55.6	22.2	17
60	UCT212-30	568	285	300	103	240	8	38	65	22	243	60	15	657	77.7	65.1	25.4	17
65	UCT213-30	606	306	300	125	260	8	43	65	22	260	64	15	705	82.7	65.1	25.4	23

Remarks: 1) If relubricatable type is needed, please order with suffix "D1".
2) The Stretcher Unit is designed to only take a horizontal radial load, in line with the adjustment direction. Axial loads or vertical radial loads can deform or break the housing.

Bolt size	Max. load 2) recommended N	Bearing number	Basic load ratings N dynamic C_r	static C_{or}	Mass of unit kg
M10	7 650	UC201D1	12 800	6 650	5.0
M10	7 650	UC202D1	12 800	6 650	5.0
M10	7 650	UC203D1	12 800	6 650	5.0
M10	7 650	UC204D1	12 800	6 650	5.0
M10	7 850	UC205D1	14 000	7 850	5.0
M10	9 810	UC206D1	19 500	11 300	5.7
M10	12 750	UC207D1	25 700	15 300	6.8
M10	15 690	UC208D1	29 100	17 800	11
M10	15 690	UC209D1	32 500	20 400	11
M12	16 670	UC210D1	35 000	23 200	11
M12	19 610	UC211D1	43 500	29 200	18
M12	21 570	UC212D1	52 500	36 000	20
M12	23 530	UC213D1	57 500	40 000	23

Type L stretcher units
Set screw type

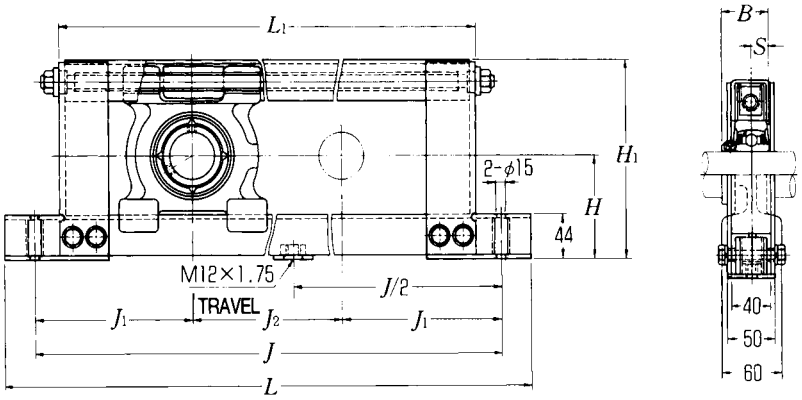

Shaft dia. mm	Unit [1] number	Nominal dimensions mm H	L	J	J2	L1	J1	H1	B	S	Bolt size	Max. load[2] recommended N	Bearing number	Basic load ratings N dynamic Cr	static Cor	Mass of unit kg
20	UCL204-10	77	430	370	100	320	135	146	31	12.7	M12	1 960	UC204D1	12 800	6 650	6.3
	UCL204-20	77	530	470	200	420	135	146	31	12.7	M12	1 960	UC204D1	12 800	6 650	7.0
	UCL204-30	77	630	570	300	520	135	146	31	12.7	M12	1 960	UC204D1	12 800	6 650	7.7
	UCL204-40	77	730	670	400	620	135	146	31	12.7	M12	1 960	UC204D1	12 800	6 650	8.4
25	UCL205-10	82	440	380	100	330	140	156	34.1	14.3	M12	2 250	UC205D1	14 000	7 850	6.8
	UCL205-20	82	540	480	200	430	140	156	34.1	14.3	M12	2 250	UC205D1	14 000	7 850	7.5
	UCL205-30	82	640	580	300	530	140	156	34.1	14.3	M12	2 250	UC205D1	14 000	7 850	8.2
	UCL205-40	82	740	680	400	630	140	156	34.1	14.3	M12	2 250	UC205D1	14 000	7 850	8.9
30	UCL206-10	87	450	390	100	340	145	166	38.1	15.9	M12	3 230	UC206D1	19 500	11 300	7.3
	UCL206-20	87	550	490	200	440	145	166	38.1	15.9	M12	3 230	UC206D1	19 500	11 300	8.0
	UCL206-30	87	650	590	300	540	145	166	38.1	15.9	M12	3 230	UC206D1	19 500	11 300	8.7
	UCL206-40	87	750	690	400	640	145	166	38.1	15.9	M12	3 230	UC206D1	19 500	11 300	9.4
35	UCL207-10	92	460	400	100	350	150	176	42.9	17.5	M12	4 210	UC207D1	25 700	15 300	7.8
	UCL207-20	92	560	500	200	450	150	176	42.9	17.5	M12	4 210	UC207D1	25 700	15 300	8.5
	UCL207-30	92	660	600	300	550	150	176	42.9	17.5	M12	4 210	UC207D1	25 700	15 300	9.2
	UCL207-40	92	760	700	400	650	150	176	42.9	17.5	M12	4 210	UC207D1	25 700	15 300	9.9
40	UCL208-10	97	470	410	100	360	155	186	49.2	19	M12	4 500	UC208D1	29 100	17 800	8.3
	UCL208-20	97	570	510	200	460	155	186	49.2	19	M12	4 500	UC208D1	29 100	17 800	9.0
	UCL208-30	97	670	610	300	560	155	186	49.2	19	M12	4 500	UC208D1	29 100	17 800	9.7
	UCL208-40	97	770	710	400	660	155	186	49.2	19	M12	4 500	UC208D1	29 100	17 800	10
45	UCL209-10	100	480	420	100	370	160	192	49.2	19	M12	4 500	UC209D1	32 500	20 400	8.7
	UCL209-20	100	580	520	200	470	160	192	49.2	19	M12	4 500	UC209D1	32 500	20 400	9.4
	UCL209-30	100	680	620	300	570	160	192	49.2	19	M12	4 500	UC209D1	32 500	20 400	10
	UCL209-40	100	780	720	400	670	160	192	49.2	19	M12	4 500	UC209D1	32 500	20 400	11

Remarks: 1) If relubricatable type is needed, please order with suffix "D1".
2) The Stretcher Unit is designed to only take a horizontal radial load, in line with the adjustment direction. Axial loads or vertical radial loads can deform or break the housing.

Type M stretcher units
Set screw type

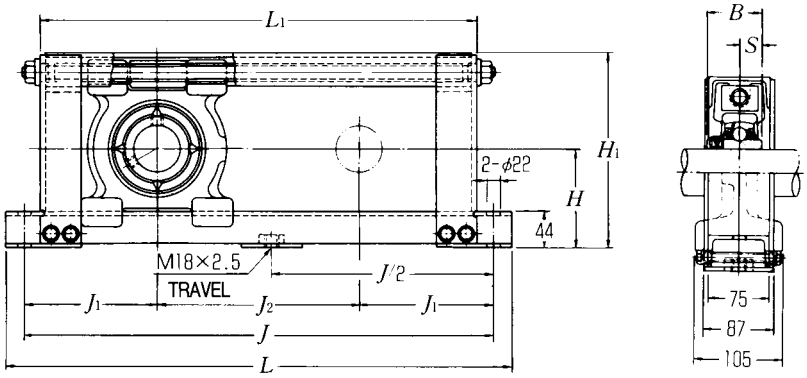

Shaft dia. mm	Unit [1] number	Nominal dimensions mm H	L	J	J_2	L_1	J_1	H_1	B	S	Bolt size	Max. load[2] recommended N	Bearing number	Basic load ratings N dynamic C_r	static C_{or}	Mass of unit kg
	UCM208-50	97	870	810	500	760	155	190	49.2	19	M18	5 190	UC208D1	29 100	17 800	20
	UCM208-60	97	970	910	600	860	155	190	49.2	19	M18	5 190	UC208D1	29 100	17 800	22
40	UCM208-70	97	1 070	1 010	700	960	155	190	49.2	19	M18	5 190	UC208D1	29 100	17 800	23
	UCM208-80	97	1 170	1 110	800	1 060	155	190	49.2	19	M18	5 190	UC208D1	29 100	17 800	24
	UCM208-90	97	1 270	1 210	900	1 160	155	190	49.2	19	M18	5 190	UC208D1	29 100	17 800	30
	UCM209-50	102	880	820	500	770	160	200	49.2	19	M18	5 880	UC209D1	32 500	20 400	21
	UCM209-60	102	980	920	600	870	160	200	49.2	19	M18	5 880	UC209D1	32 500	20 400	23
45	UCM209-70	102	1 080	1 020	700	970	160	200	49.2	19	M18	5 880	UC209D1	32 500	20 400	24
	UCM209-80	102	1 180	1 120	800	1 070	160	200	49.2	19	M18	5 880	UC209D1	32 500	20 400	30
	UCM209-90	102	1 280	1 220	900	1 170	160	200	49.2	19	M18	5 880	UC209D1	32 500	20 400	32
	UCM210-50	107	890	830	500	780	165	210	51.6	19	M18	6 460	UC210D1	35 000	23 200	23
	UCM210-60	107	990	930	600	880	165	210	51.6	19	M18	6 460	UC210D1	35 000	23 200	24
50	UCM210-70	107	1 090	1 030	700	980	165	210	51.6	19	M18	6 460	UC210D1	35 000	23 200	30
	UCM210-80	107	1 190	1 130	800	1 080	165	210	51.6	19	M18	6 460	UC210D1	35 000	23 200	32
	UCM210-90	107	1 290	1 230	900	1 180	165	210	51.6	19	M18	6 460	UC210D1	35 000	23 200	33
	UCM211-50	115	910	850	500	800	175	230	55.6	22.2	M18	6 460	UC211D1	43 500	29 200	25
	UCM211-60	115	1 010	950	600	900	175	230	55.6	22.2	M18	6 460	UC211D1	43 500	29 200	27
55	UCM211-70	115	1 110	1 050	700	1 000	175	230	55.6	22.2	M18	6 460	UC211D1	43 500	29 200	32
	UCM211-80	115	1 210	1 150	800	1 100	175	230	55.6	22.2	M18	6 460	UC211D1	43 500	29 200	34
	UCM211-90	115	1 310	1 250	900	1 200	175	230	55.6	22.2	M18	6 460	UC211D1	43 500	29 200	36
	UCM212-50	120	920	860	500	810	180	240	65.1	25.4	M18	6 460	UC212D1	52 500	36 000	28
	UCM212-60	120	1 020	960	600	910	180	240	65.1	25.4	M18	6 460	UC212D1	52 500	36 000	29
60	UCM212-70	120	1 120	1 060	700	1 010	180	240	65.1	25.4	M18	6 460	UC212D1	52 500	36 000	35
	UCM212-80	120	1 220	1 160	800	1 110	180	240	65.1	25.4	M18	6 460	UC212D1	52 500	36 000	36
	UCM212-90	120	1 320	1 260	900	1 210	180	240	65.1	25.4	M18	6 460	UC212D1	52 500	36 000	38
	UCM213-50	125	940	880	500	830	190	250	65.1	25.4	M18	6 460	UC213D1	57 500	40 000	30
	UCM213-60	125	1 040	980	600	930	190	250	65.1	25.4	M18	6 460	UC213D1	57 500	40 000	31
65	UCM213-70	125	1 140	1 080	700	1 030	190	250	65.1	25.4	M18	6 460	UC213D1	57 500	40 000	36
	UCM213-80	125	1 240	1 180	800	1 130	190	250	65.1	25.4	M18	6 460	UC213D1	57 500	40 000	38
	UCM213-90	125	1 340	1 280	900	1 230	190	250	65.1	25.4	M18	6 460	UC213D1	57 500	40 000	40

Remarks: 1) If relubricatable type is needed, please order with suffix "D1".
2) The Stretcher Unit is designed to only take a horizontal radial load, in line with the adjustment direction. Axial loads or vertical radial loads can deform or break the housing.

Type M stretcher units
Set screw type

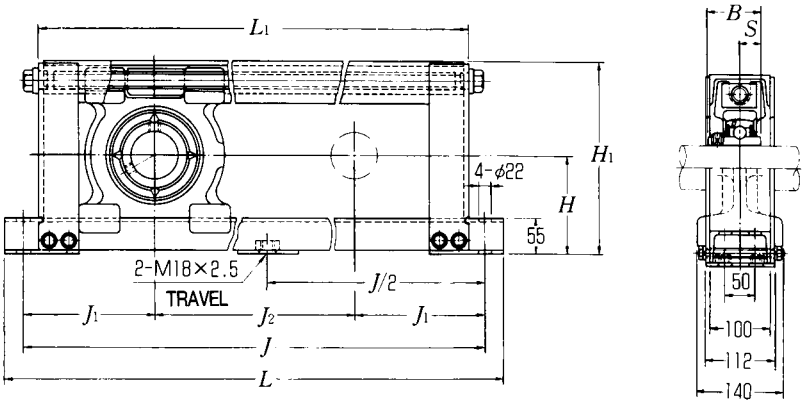

Shaft dia. mm	Unit [1] number	Nominal dimensions mm H	L	J	J2	L1	J1	H1	B	S	Bolt size	Max. load[2] recommended N	Bearing number	Basic load ratings N dynamic Cr	static Cor	Mass of unit kg
65	UCM313-50	145	940	880	500	830	190	285	75	30	M18	16 260	UC313D1	92 500	60 000	47
	UCM313-60	145	1 040	980	600	930	190	285	75	30	M18	16 260	UC313D1	92 500	60 000	50
	UCM313-70	145	1 140	1 080	700	1 030	190	285	75	30	M18	16 260	UC313D1	92 500	60 000	53
	UCM313-80	145	1 240	1 180	800	1 130	190	285	75	30	M18	16 260	UC313D1	92 500	60 000	55
	UCM313-90	145	1 340	1 280	900	1 230	190	285	75	30	M18	16 260	UC313D1	92 500	60 000	58
70	UCM314-50	150	960	900	500	850	200	295	78	33	M18	19 600	UC314D1	104 000	68 000	49
	UCM314-60	150	1 060	1 000	600	950	200	295	78	33	M18	19 600	UC314D1	104 000	68 000	52
	UCM314-70	150	1 160	1 100	700	1 050	200	295	78	33	M18	19 600	UC314D1	104 000	68 000	55
	UCM314-80	150	1 260	1 200	800	1 150	200	295	78	33	M18	19 600	UC314D1	104 000	68 000	58
	UCM314-90	150	1 360	1 300	900	1 250	200	295	78	33	M18	19 600	UC314D1	104 000	68 000	61
75	UCM315-50	155	980	920	500	870	210	305	82	32	M18	19 600	UC315D1	113 000	77 000	52
	UCM315-60	155	1 080	1 020	600	970	210	305	82	32	M18	19 600	UC315D1	113 000	77 000	55
	UCM315-70	155	1 180	1 120	700	1 070	210	305	82	32	M18	19 600	UC315D1	113 000	77 000	58
	UCM315-80	155	1 280	1 220	800	1 170	210	305	82	32	M18	19 600	UC315D1	113 000	77 000	60
	UCM315-90	155	1 380	1 320	900	1 270	210	305	82	32	M18	19 600	UC315D1	113 000	77 000	63
80	UCM316-50	160	1 000	940	500	890	220	315	86	34	M18	19 600	UC316D1	123 000	86 500	54
	UCM316-60	160	1 100	1 040	600	990	220	315	86	34	M18	19 600	UC316D1	123 000	86 500	57
	UCM316-70	160	1 200	1 140	700	1 090	220	315	86	34	M18	19 600	UC316D1	123 000	86 500	60
	UCM316-80	160	1 300	1 240	800	1 190	220	315	86	34	M18	19 600	UC316D1	123 000	86 500	63
	UCM316-90	160	1 400	1 340	900	1 290	220	315	86	34	M18	19 600	UC316D1	123 000	86 500	66
85	UCM317-50	165	1 020	960	500	910	230	325	96	40	M18	19 600	UC317D1	133 000	97 000	60
	UCM317-60	165	1 120	1 060	600	1 010	230	325	96	40	M18	19 600	UC317D1	133 000	97 000	63
	UCM317-70	165	1 220	1 160	700	1 110	230	325	96	40	M18	19 600	UC317D1	133 000	97 000	65
	UCM317-80	165	1 320	1 260	800	1 210	230	325	96	40	M18	19 600	UC317D1	133 000	97 000	68
	UCM317-90	165	1 420	1 360	900	1 310	230	325	96	40	M18	19 600	UC317D1	133 000	97 000	71
90	UCM318-50	170	1 050	990	500	940	245	335	96	40	M18	19 600	UC318D1	143 000	107 000	65
	UCM318-60	170	1 150	1 090	600	1 040	245	335	96	40	M18	19 600	UC318D1	143 000	107 000	68
	UCM318-70	170	1 250	1 190	700	1 140	245	335	96	40	M18	19 600	UC318D1	143 000	107 000	71
	UCM318-80	170	1 350	1 290	800	1 240	245	335	96	40	M18	19 600	UC318D1	143 000	107 000	74
	UCM318-90	170	1 450	1 390	900	1 340	245	335	96	40	M18	19 600	UC318D1	143 000	107 000	77

Remarks: 1) If relubricatable type is needed, please order with suffix "D1".
2) The Stretcher Unit is designed to only take a horizontal radial load, in line with the adjustment direction. Axial loads or vertical radial loads can deform or break the housing.

Type M stretcher units
Set screw type

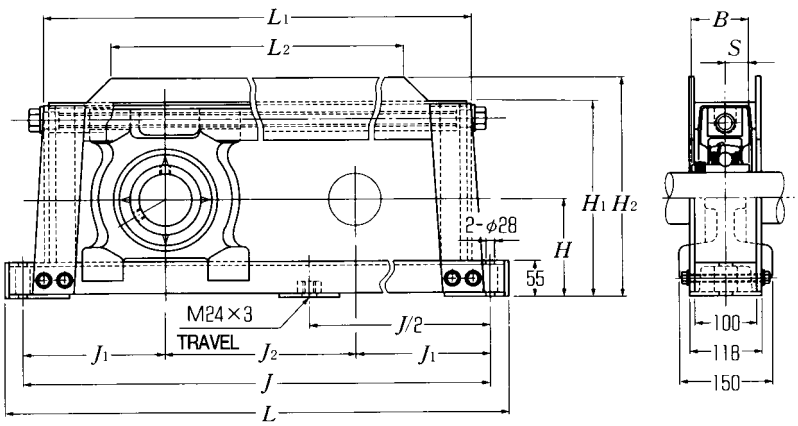

Shaft dia. mm	Unit [1] number	Nominal dimensions mm H	L	J	J_2	L_1	L_2	J_1	H_1	H_2	B	S	Bolt size	Max. load[2] recommended N	Bearing number	Basic load ratings N dynamic C_r	static C_{or}	Mass of unit kg
	UCM319-50	185	1 180	1 100	500	1 021	775	300	377	400	103	41	M24	19 600	UC319D1	153 000	119 000	105
	UCM319-60	185	1 280	1 200	600	1 121	875	300	377	400	103	41	M24	19 600	UC319D1	153 000	119 000	109
95	UCM319-70	185	1 380	1 300	700	1 221	975	300	377	400	103	41	M24	19 600	UC319D1	153 000	119 000	112
	UCM319-80	185	1 480	1 400	800	1 321	1 075	300	377	400	103	41	M24	19 600	UC319D1	153 000	119 000	116
	UCM319-90	185	1 580	1 500	900	1 421	1 175	300	377	400	103	41	M24	19 600	UC319D1	153 000	119 000	120
	UCM320-50	200	1 220	1 140	500	1 063	809	320	403	430	108	42	M24	19 600	UC320D1	173 000	141 000	111
	UCM320-60	200	1 320	1 240	600	1 163	909	320	403	430	108	42	M24	19 600	UC320D1	173 000	141 000	116
100	UCM320-70	200	1 420	1 340	700	1 263	1 009	320	403	430	108	42	M24	19 600	UC320D1	173 000	141 000	120
	UCM320-80	200	1 520	1 440	800	1 363	1 109	320	403	430	108	42	M24	19 600	UC320D1	173 000	141 000	124
	UCM320-90	200	1 620	1 540	900	1 463	1 209	320	403	430	108	42	M24	19 600	UC320D1	173 000	141 000	129

Remarks: 1) If relubricatable type is needed, please order with suffix "D1".
2) The Stretcher Unit is designed to only take a horizontal radial load, in line with the adjustment direction. Axial loads or vertical radial loads can deform or break the housing.

Ball bearings
Set screw type

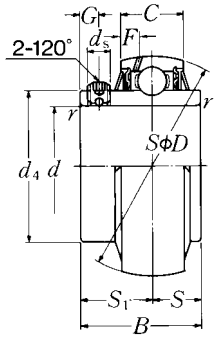

Shaft dia. mm / inch	Bearing number	Nominal dimensions d	D	B	C	rs min. (mm)	S (mm)	S1 (inch)	G	ds	d4	F
12	UC201D1	12	47	31	17	0.6	12.7	18.3	4.5	M5 × 0.8	29.6	4.7
1/2	UC201-008D1	0.5000	1.8504	1.2205	0.6693	0.024	0.500	0.720	0.177	No.10-32UNF	1.1654	0.185
15	UC202D1	15	47	31	17	0.6	12.7	18.3	4.5	M5 × 0.8	29.6	4.7
9/16	UC202-009D1	0.5625	1.8504	1.2205	0.6693	0.024	0.500	0.720	0.177	No.10-32UNF	1.1654	0.185
5/8	UC202-010D1	0.6250										
17	UC203D1	17	47	31	17	0.6	12.7	18.3	4.5	M5 × 0.8	29.6	4.7
11/16	UC203-011D1	0.6875	1.8504	1.2205	0.6693	0.024	0.500	0.720	0.177	No.10-32UNF	1.1654	0.185
20	UC204D1	20	47	31	17	1	12.7	18.3	4.5	M5 × 0.8	29.6	4.7
3/4	UC204-012D1	0.7500	1.8504	1.2205	0.6693	0.039	0.500	0.720	0.177	No.10-32UNF	1.1654	0.185
25	UC205D1	25	52	34.1	17	1	14.3	19.8	5	M5 × 0.8	33.9	4.5
13/16	UC205-013D1	0.8125										
7/8	UC205-014D1	0.8750	2.0472	1.3425	0.6693	0.039	0.563	0.780	0.197	No.10-32UNF	1.3346	0.177
15/16	UC205-015D1	0.9375										
1	UC205-100D1	1.0000										
30	UC206D1	30	62	38.1	19	1	15.9	22.2	5	M6 × 0.75	40.8	4.6
1 1/16	UC206-101D1	1.0625										
1 1/8	UC206-102D1	1.1250	2.4409	1.5000	0.7480	0.039	0.626	0.874	0.197	1/4-28UNF	1.6063	0.181
1 3/16	UC206-103D1	1.1875										
1 1/4	UC206-104D1	1.2500										
35	UC207D1	35	72	42.9	20	1.5	17.5	25.4	6	M6 × 0.75	46.8	4.6
1 1/4	UC207-104D1	1.2500										
1 5/16	UC207-105D1	1.3125	2.8346	1.6890	0.7874	0.059	0.689	1.000	0.236	1/4-28UNF	1.8425	0.181
1 3/8	UC207-106D1	1.3750										
1 7/16	UC207-107D1	1.4375										
40	UC208D1	40	80	49.2	21	1.5	19	30.2	8	M8 × 1	53	4.5
1 1/2	UC208-108D1	1.5000	3.1496	1.9370	0.8268	0.059	0.748	1.189	0.315	5/16-24UNF	2.0866	0.177
1 9/16	UC208-109D1	1.5625										
45	UC209D1	45	85	49.2	22	1.5	19	30.2	8	M8 × 1	57.5	4.9
1 5/8	UC209-110D1	1.6250										
1 11/16	UC209-111D1	1.6875	3.3465	1.9370	0.8661	0.059	0.748	1.189	0.315	5/16-24UNF	2.2638	0.193
1 3/4	UC209-112D1	1.7500										

Remarks: 1) For inch series bearings, the f_0 factor for calculating equivalent radial load is the same as the metric series.

Basic load ratings		Factor[1)]	Mass
N	lbf		kg lb
dynamic C_r	static C_{or}	f_0	
12 800	6 650	13.2	0.21
2 890	1 500		0.46
12 800	6 650	13.2	0.20
2 890	1 500		0.44
			0.42
12 800	6 650	13.2	0.18
2 890	1 500		0.39
12 800	6 650	13.2	0.17
2 890	1 500		0.39
14 000	7 850	13.9	0.20
			0.53
3 150	1 770		0.51
			0.46
			0.44
19 500	11 300	13.8	0.32
			0.82
4 400	2 540		0.77
			0.73
			0.66
25 700	15 300	13.8	0.46
			1.21
5 750	3 450		1.15
			1.08
			1.01
29 100	17 800	14.0	0.64
6 550	4 000		1.52
			1.46
32 500	20 400	14.1	0.68
			1.76
7 350	4 600		1.68
			1.57

Ball bearings
Set screw type

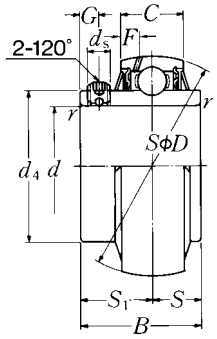

Shaft dia. mm / inch	Bearing number	Nominal dimensions d	D	B	C	r_s min.	S (mm)	S_1 (inch)	G	ds	d_4	F
50	UC210D1	50	90	51.6	24	1.5	19	32.6	9	M8 × 1	62.4	5.9
1 13/16	UC210-113D1	1.8125										
1 7/8	UC210-114D1	1.8750	3.5433	2.0315	0.9449	0.059	0.748	1.283	0.354	5/16-24UNF	2.4567	0.232
1 15/16	UC210-115D1	1.9375										
2	UC210-200D1	2.0000										
55	UC211D1	55	100	55.6	25	2	22.2	33.4	9	M8 × 1	69	6.0
2	UC211-200D1	2.0000										
2 1/16	UC211-201D1	2.0625	3.9370	2.1890	0.9843	0.079	0.874	1.315	0.354	5/16-24UNF	2.7165	0.236
2 1/8	UC211-202D1	2.1250										
2 3/16	UC211-203D1	2.1875										
60	UC212D1	60	110	65.1	27	2	25.4	39.7	10	M10 × 1.25	77	6.2
2 1/4	UC212-204D1	2.2500										
2 5/16	UC212-205D1	2.3125	4.3307	2.5630	1.0630	0.079	1.000	1.563	0.394	3/8-24UNF	3.0315	0.244
2 3/8	UC212-206D1	2.3750										
2 7/16	UC212-207D1	2.4375										
65	UC213D1	65	120	65.1	32	2	25.4	39.7	10	M10 × 1.25	82.5	8.7
2 1/2	UC213-208D1	2.5000	4.7244	2.5630	1.2598	0.079	1.000	1.563	0.394	3/8-24UNF	3.2480	0.343
2 9/16	UC213-209D1	2.5625										
70	UC214D1	70	125	74.6	33	2	30.2	44.4	12	M10 × 1.25	87	8.8
2 5/8	UC214-210D1	2.6250										
2 11/16	UC214-211D1	2.6875	4.9213	2.9370	1.2992	0.079	1.189	1.748	0.472	3/8-24UNF	3.4252	0.346
2 3/4	UC214-212D1	2.7500										
75	UC215D1	75	130	77.8	34	2	33.3	44.5	12	M10 × 1.25	93	9.0
2 13/16	UC215-213D1	2.8125										
2 7/8	UC215-214D1	2.8750	5.1181	3.0630	1.3386	0.079	1.311	1.752	0.472	3/8-24UNF	3.6614	0.354
2 15/16	UC215-215D1	2.9375										
3	UC215-300D1	3.0000										
80	UC216D1	80	140	82.6	35	2.5	33.3	49.3	12	M10 × 1.25	98.1	9.5
3 1/16	UC216-301D1	3.0625										
3 1/8	UC216-302D1	3.1250	5.5118	3.2520	1.3780	0.098	1.311	1.941	0.472	3/8-24UNF	3.8622	0.374
3 3/16	UC216-303D1	3.1875										

Remarks: 1) For inch series bearings, the f_0 factor for calculating equivalent radial load is the same as the metric series.

Basic load ratings		Factor[1)]	Mass
N	lbf		kg lb
dynamic C_r	static C_{or}	f_0	
35 000	23 200	14.4	0.78
			2.03
7 900	5 200		1.92
			1.81
			1.69
43 500	29 200	14.3	1.04
			2.71
9 750	6 550		2.60
			2.46
			2.34
52 500	36 000	14.3	1.46
			3.66
11 800	8 150		3.50
			3.33
			3.17
57 500	40 000	14.4	1.86
12 900	9 000		4.26
			4.09
62 000	44 000	14.5	2.10
			5.09
14 000	9 900		4.87
			4.65
66 000	49 500	14.7	2.34
			5.73
14 900	11 100		5.49
			5.25
			4.98
72 500	53 000	14.6	2.78
			6.57
16 300	11 900		6.28
			6.00

Ball bearings
Set screw type

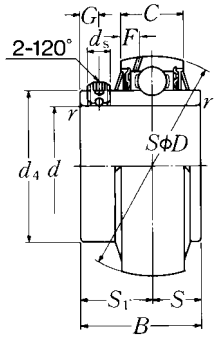

Shaft dia. mm / inch	Bearing number	Nominal dimensions										
		mm						inch				
		d	D	B	C	r_s min.	S	S_1	G	ds	d_4	F
85	**UC217D1**	85	150	85.7	36	2.5	34.1	51.6	12	M12 × 1.5	106.4	10.1
3¼	**UC217-304D1**	3.2500										
3 5/16	**UC217-305D1**	3.3125	5.9055	3.3740	1.4173	0.098	1.343	2.031	0.472	½-20UNF	4.1890	0.398
3 7/16	**UC217-307D1**	3.4375										
90	**UC218D1**	90	160	96	37	2.5	39.7	56.3	12	M12 × 1.5	111.6	9.8
3½	**UC218-308D1**	3.5000	6.2992	3.7795	1.4570	0.098	1.563	2.217	0.472	½-20UNF	4.3937	0.386

Remarks: 1) For inch series bearings, the f_0 factor for calculating equivalent radial load is the same as the metric series.

Basic load ratings		Factor[1)]	Mass	
N	lbf		kg	lb
dynamic C_r	static C_{or}	f_0		
83 500	64 000	14.7	3.54	
18 700	14 300		7.92	
			7.60	
			6.97	
96 000	71 500	14.5	4.40	
21 600	16 100		9.88	

Ball bearings
Set screw type

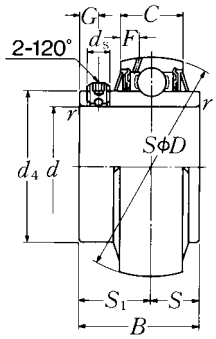

Shaft dia. mm / inch	Bearing number	Nominal dimensions d	D	B	C	r_s min. (mm)	S (mm)	S_1 (inch)	G	ds	d_4	F
25	UC305D1	25	62	38	20	1.5	15	23	6	M6 × 0.75	36.8	5.0
13/16	UC305-013D1	0.8125										
7/8	UC305-014D1	0.8750	2.4409	1.4961	0.7874	0.059	0.591	0.906	0.236	1/4-28UNF	1.4488	0.197
15/16	UC305-015D1	0.9375										
1	UC305-100D1	1.0000										
30	UC306D1	30	72	43	23	1.5	17	26	6	M6 × 0.75	44.9	5.9
1 1/16	UC306-101D1	1.0625										
1 1/8	UC306-102D1	1.1250	2.8346	1.6929	0.9055	0.059	0.669	1.024	0.236	1/4-28UNF	1.7677	0.232
1 3/16	UC306-103D1	1.1875										
35	UC307D1	35	80	48	25	2	19	29	8	M8 × 1	49.4	6.8
1 1/4	UC307-104D1	1.2500										
1 5/16	UC307-105D1	1.3125	3.1496	1.8898	0.9843	0.079	0.748	1.142	0.315	5/16-24UNF	1.9449	0.268
1 3/8	UC307-106D1	1.3750										
1 7/16	UC307-107D1	1.4375										
40	UC308D1	40	90	52	27	2	19	33	10	M10 × 1.25	56	7.4
1 1/2	UC308-108D1	1.5000	3.5433	2.0472	1.0630	0.079	0.748	1.299	0.394	3/8-24UNF	2.2047	0.291
1 9/16	UC308-109D1	1.5625										
45	UC309D1	45	100	57	29	2	22	35	10	M10 × 1.25	63.5	7.4
1 5/8	UC309-110D1	1.6250										
1 11/16	UC309-111D1	1.6875	3.9370	2.2441	1.1417	0.079	0.866	1.378	0.394	3/8-24UNF	2.5000	0.291
1 3/4	UC309-112D1	1.7500										
50	UC310D1	50	110	61	32	2.5	22	39	12	M12 × 1.5	70.6	8.1
1 13/16	UC310-113D1	1.8125										
1 7/8	UC310-114D1	1.8750	4.3307	2.4016	1.2598	0.098	0.866	1.535	0.472	1/2-20UNF	2.7795	0.319
1 15/16	UC310-115D1	1.9375										
55	UC311D1	55	120	66	34	2.5	25	41	12	M12 × 1.5	76.6	8.5
2	UC311-200D1	2.0000										
2 1/16	UC311-201D1	2.0625	4.7244	2.5984	1.3386	0.098	0.984	1.614	0.472	1/2-20UNF	3.0157	0.335
2 1/8	UC311-202D1	2.1250										
2 3/16	UC311-203D1	2.1875										

Remarks: 1) For inch series bearings, the f_0 factor for calculating equivalent radial load is the same as the metric series.

Basic load ratings		Factor[1)]	Mass
N	lbf		kg lb
dynamic C_r	static C_{or}	f_0	
21 200	10 900	12.6	0.35
			0.88
4 750	2 460		0.84
			0.79
			0.77
26 700	15 000	13.3	0.56
			1.34
6 000	3 400		1.28
			1.23
33 500	19 100	13.1	0.70
			1.70
7 500	4 300		1.63
			1.57
			1.50
40 500	24 000	13.2	0.96
9 150	5 400		2.23
			2.14
53 000	32 000	13.1	1.28
			3.06
11 900	7 200		2.98
			2.87
62 000	38 500	13.2	1.68
			3.95
13 900	8 600		3.84
			3.70
71 500	45 000	13.2	2.08
			4.96
16 100	10 100		4.81
			4.67
			4.50

Ball bearings
Set screw type

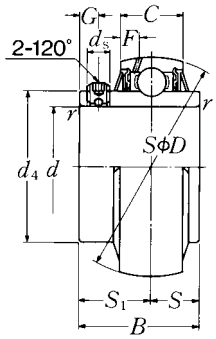

Shaft dia. mm / inch	Bearing number	Nominal dimensions d	D	B	C	r_s min. (mm)	S (mm)	S_1 (inch)	G	ds	d_4	F
60	UC312D1	60	130	71	36	2.5	26	45	12	M12 × 1.5	82.7	9.0
2 1/4	UC312-204D1	2.2500										
2 5/16	UC312-205D1	2.3125	5.1181	2.7953	1.4173	0.098	1.024	1.772	0.472	1/2-20UNF	3.2559	0.354
2 3/8	UC312-206D1	2.3750										
2 7/16	UC312-207D1	2.4375										
65	UC313D1	65	140	75	39	2.5	30	45	12	M12 × 1.5	88.2	10.1
2 1/2	UC313-208D1	2.5000	5.5118	2.9528	1.5354	0.098	1.181	1.772	0.472	1/2-20UNF	3.4724	0.398
2 9/16	UC313-209D1	2.5625										
70	UC314D1	70	150	78	41	2.5	33	45	12	M12 × 1.5	94.8	10.5
2 5/8	UC314-210D1	2.6250										
2 11/16	UC314-211D1	2.6875	5.9055	3.0709	1.6142	0.098	1.299	1.772	0.472	1/2-20UNF	3.7323	0.413
2 3/4	UC314-212D1	2.7500										
75	UC315D1	75	160	82	43	2.5	32	50	14	M14 × 1.5	101.3	11.0
2 13/16	UC315-213D1	2.8125										
2 7/8	UC315-214D1	2.8750	6.2992	3.2283	1.6929	0.098	1.260	1.969	0.551	9/16-18UNF	3.9882	0.433
2 15/16	UC315-215D1	2.9375										
3	UC315-300D1	3.0000										
80	UC316D1	80	170	86	45	2.5	34	52	14	M14 × 1.5	107.9	11.4
3 1/16	UC316-301D1	3.0625										
3 1/8	UC316-302D1	3.1250	6.6929	3.3858	1.7717	0.098	1.339	2.047	0.551	9/16-18UNF	4.2480	0.449
3 3/16	UC316-303D1	3.1875										
85	UC317D1	85	180	96	47	3	40	56	16	M16 × 1.5	114.4	12.0
3 1/4	UC317-304D1	3.2500										
3 5/16	UC317-305D1	3.3125	7.0866	3.7795	1.8504	0.118	1.575	2.205	0.630	5/8-18UNF	4.5039	0.472
3 7/16	UC317-307D1	3.4375										
90	UC318D1	90	190	96	49	3	40	56	16	M16 × 1.5	120.9	12.3
3 7/16	UC318-307D1	3.4375	7.4803	3.7795	1.9291	0.118	1.575	2.205	0.630	5/8-18UNF	4.7598	0.484
3 1/2	UC318-308D1	3.5000										

Remarks: 1) For inch series bearings, the f_0 factor for calculating equivalent radial load is the same as the metric series.

Basic load ratings		Factor[1)]	Mass
N	lbf		kg lb
dynamic C_r	static C_{or}	f_0	
82 000	52 000	13.2	2.60
18 400	11 700		6.06
			5.89
			5.68
			5.51
92 500	60 000	13.2	3.25
20 800	13 400		7.36
			7.14
104 000	68 000	13.2	3.86
23 400	15 300		9.06
			8.82
			8.60
113 000	77 000	13.2	4.70
25 500	17 400		11.0
			10.7
			10.5
			10.2
123 000	86 500	13.3	5.60
27 600	19 500		12.6
			12.3
			12.1
133 000	97 000	13.3	6.70
29 800	21 800		15.2
			14.9
			14.2
143 000	107 000	13.3	7.60
32 000	24 100		17.3
			16.9

Ball bearings
Set screw type

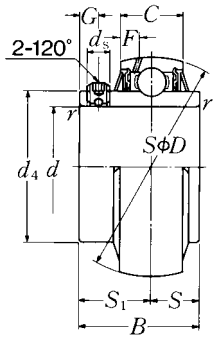

Shaft dia. mm / inch	Bearing number	Nominal dimensions										
		d	D	B	C	r_s min.	mm S	inch S_1	G	ds	d_4	F
95	**UC319D1**	95	200	103	51	3	41	62	16	M16 × 1.5	127.5	12.8
3 5/8	**UC319-310D1**	3.6250										
3 11/16	**UC319-311D1**	3.6875	7.8740	4.0551	2.0079	0.118	1.614	2.441	0.630	5/8-18UNF	5.0197	0.504
3 3/4	**UC319-312D1**	3.7500										
100	**UC320D1**	100	215	108	55	3	42	66	18	M18 × 1.5	135.6	13.5
3 13/16	**UC320-313D1**	3.8125										
3 7/8	**UC320-314D1**	3.8750	8.4646	4.2520	2.1654	0.118	1.654	2.598	0.709	5/8-18UNF	5.3386	0.531
3 15/16	**UC320-315D1**	3.9375										
4	**UC320-400D1**	4.0000										
105	**UC321D1**	105	225	112	57	3	44	68	18	M18 × 1.5	142.1	13.9
110	**UC322D1**	110	240	117	59	3	46	71	18	M18 × 1.5	151.7	13.9
120	**UC324D1**	120	260	126	63	3	51	75	18	M18 × 1.5	165.2	16.0
130	**UC326D1**	130	280	135	67	4	54	81	20	M20 × 1.5	178.3	16.9
140	**UC328D1**	140	300	145	71	4	59	86	20	M20 × 1.5	190.4	17.7

Remarks: 1) For inch series bearings, the f_0 factor for calculating equivalent radial load is the same as the metric series.

Basic load ratings		Factor[1)]	Mass
N	lbf		kg lb
dynamic C_r	static C_{or}	f_0	
153 000	119 000	13.3	8.70
34 500	26 600		19.9
			19.5
			19.1
173 000	141 000	13.2	10.8
39 000	31 500		24.7
			24.2
			23.8
			23.4
184 000	153 000	13.2	12.2
205 000	179 000	13.1	14.3
207 000	185 000	13.5	18.5
229 000	214 000	13.6	23.0
253 000	246 000	13.6	28.5

Ball bearings
Set screw type

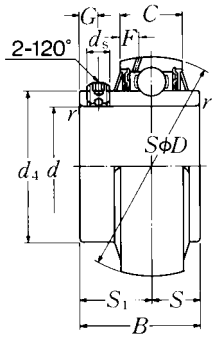

Shaft dia. mm / inch	Bearing number	Nominal dimensions										
		d	D	B	C	r_s min.	S (mm)	S_1 (inch)	G	ds	d_4	F
25	**UCX05D1**	25	62	38.1	19	1	15.9	22.2	5	M6 × 0.75	40.8	4.6
13/16	**UCX05-013D1**	0.8125										
7/8	**UCX05-014D1**	0.8750	2.4409	1.5000	0.7480	0.039	0.626	0.874	0.197	1/4-28UNF	1.6063	0.181
15/16	**UCX05-015D1**	0.9375										
1	**UCX05-100D1**	1.0000										
30	**UCX06D1**	30	72	42.9	20	1	17.5	25.4	6	M8 × 1	46.8	4.6
1 1/16	**UCX06-101D1**	1.0625										
1 1/8	**UCX06-102D1**	1.1250	2.8346	1.6890	0.7874	0.039	0.689	1.000	0.236	5/16-24UNF	1.8425	0.181
1 3/16	**UCX06-103D1**	1.1875										
35	**UCX07D1**	35	80	49.2	21	1.5	19	30.2	8	M8 × 1	53	4.5
1 5/16	**UCX07-105D1**	1.3125										
1 3/8	**UCX07-106D1**	1.3750	3.1496	1.9370	0.8268	0.059	0.748	1.189	0.315	5/16-24UNF	2.0866	0.177
1 7/16	**UCX07-107D1**	1.4375										
40	**UCX08D1**	40	85	49.2	22	1.5	19	30.2	8	M8 × 1	57.5	4.9
1 1/2	**UCX08-108D1**	1.5000	3.3465	1.9370	0.8661	0.059	0.748	1.189	0.315	5/16-24UNF	2.2638	0.193
1 9/16	**UCX08-109D1**	1.5625										
45	**UCX09D1**	45	90	51.6	24	1.5	19	32.6	9	M10 × 1.25	62.4	5.9
1 5/8	**UCX09-110D1**	1.6250										
1 11/16	**UCX09-111D1**	1.6875	3.5433	2.0315	0.9449	0.059	0.748	1.283	0.354	3/8-24UNF	2.4567	0.232
1 3/4	**UCX09-112D1**	1.7500										
50	**UCX10D1**	50	100	55.6	25	1.5	22.2	33.4	9	M10 × 1.25	69	6.0
1 7/8	**UCX10-114D1**	1.8750	3.9370	2.1890	0.9843	0.059	0.874	1.315	0.354	3/8-24UNF	2.7165	0.236
1 15/16	**UCX10-115D1**	1.9375										
55	**UCX11D1**	55	110	65.1	27	2	25.4	39.7	10	M10 × 1.25	77	6.2
2 1/16	**UCX11-201D1**	2.0625										
2 1/8	**UCX11-202D1**	2.1250	4.3307	2.5630	1.0630	0.079	1.000	1.563	0.394	3/8-24UNF	3.0315	0.244
2 3/16	**UCX11-203D1**	2.1875										
60	**UCX12D1**	60	120	65.1	32	2	25.4	39.7	10	M10 × 1.25	82.5	8.7
2 3/8	**UCX12-206D1**	2.3750	4.7244	2.5630	1.2598	0.079	1.000	1.563	0.394	3/8-24UNF	3.2480	0.343
2 7/16	**UCX12-207D1**	2.4375										

Remarks: 1) For inch series bearings, the f_0 factor for calculating equivalent radial load is the same as the metric series.

Basic load ratings		Factor[1)]	Mass
N	lbf		kg lb
dynamic C_r	static C_{or}	f_0	
19 500	11 300	13.8	0.39
			0.97
4 400	2 540		0.93
			0.88
			0.84
25 700	15 300	13.8	0.68
			1.61
5 750	3 450		1.54
			1.50
29 100	17 800	14.0	0.74
			1.87
6 550	4 000		1.81
			1.74
32 500	20 400	14.1	0.80
7 350	4 600		2.16
			2.07
35 000	23 200	14.4	0.94
			2.43
7 900	5 200		2.34
			2.25
43 500	29 200	14.3	1.22
9 750	6 550		3.15
			3.04
52 500	36 000	14.3	1.72
			4.43
11 800	8 150		4.30
			4.12
57 500	40 000	14.4	2.10
12 900	9 000		4.96
			4.81

Ball bearings
Set screw type

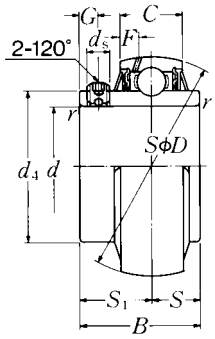

Shaft dia. mm / inch	Bearing number	Nominal dimensions d	D	B	C	r_s min. (mm)	S (mm)	S_1 (inch)	G	ds	d_4	F
65	UCX13D1	65	125	74.6	33	2	30.2	44.4	12	M12 × 1.5	87	8.8
2 1/2	UCX13-208D1	2.5000	4.9213	2.9370	1.2992	0.079	1.189	1.748	0.472	1/2-20UNF	3.4252	0.346
2 9/16	UCX13-209D1	2.5625										
70	UCX14D1	70	130	77.8	34	2	33.3	44.5	12	M12 × 1.5	93	9.0
2 5/8	UCX14-210D1	2.6250										
2 11/16	UCX14-211D1	2.6875	5.1181	3.0630	1.3386	0.079	1.311	1.752	0.472	1/2-20UNF	3.6614	0.354
2 3/4	UCX14-212D1	2.7500										
75	UCX15D1	75	140	82.6	35	2	33.3	49.3	12	M12 × 1.5	98.1	9.5
2 13/16	UCX15-213D1	2.8125										
2 7/8	UCX15-214D1	2.8750	5.5118	3.2520	1.3780	0.079	1.311	1.941	0.472	1/2-20UNF	3.8622	0.374
2 15/16	UCX15-215D1	2.9375										
3	UCX15-300D1	3.0000										
80	UCX16D1	80	150	85.7	36	2.5	34.1	51.6	12	M12 × 1.5	106.4	10.1
3 1/16	UCX16-301D1	3.0625										
3 1/8	UCX16-302D1	3.1250	5.9055	3.3740	1.4173	0.098	1.343	2.031	0.472	1/2-20UNF	4.1890	0.398
3 3/16	UCX16-303D1	3.1875										
85	UCX17D1	85	160	96	37	2.5	39.7	56.3	12	M12 × 1.5	111.6	9.8
3 5/16	UCX17-305D1	3.3125	6.2992	3.7795	1.4567	0.098	1.563	2.217	0.472	1/2-20UNF	4.3937	0.386
3 7/16	UCX17-307D1	3.4375										
90	UCX18D1	90	170	104	39	2.5	42.9	61.1	14	M14 × 1.5	118.2	10.5
3 7/16	UCX18-307D1	3.4375	6.6929	4.0945	1.5354	0.098	1.689	2.406	0.551	9/16-18UNF	4.6535	0.413
3 1/2	UCX18-308D1	3.5000										
100	UCX20D1	100	190	117.5	44	2.5	49.2	68.3	16	M16 × 1.5	131.3	11.3
3 13/16	UCX20-313D1	3.8125										
3 7/8	UCX20-314D1	3.8750	7.4803	4.6260	1.7323	0.098	1.937	2.689	0.630	5/8-18UNF	5.1693	0.445
3 15/16	UCX20-315D1	3.9375										
4	UCX20-400D1	4.0000										

Remarks: 1) For inch series bearings, the f_0 factor for calculating equivalent radial load is the same as the metric series.

Basic load ratings		Factor[1)]	Mass
N	lbf		kg lb
dynamic C_r	static C_{or}	f_0	
62 000	44 000	14.5	2.45
14 000	9 900		5.60
			5.38
66 000	49 500	14.7	2.47
			5.93
14 900	11 100		5.69
			5.47
72 500	53 000	14.6	3.11
			7.43
16 300	11 900		7.19
			6.92
			6.66
83 500	64 000	14.7	3.96
			8.75
18 700	14 300		8.47
			8.18
96 000	71 500	14.5	4.72
21 600	16 100		10.8
			10.1
109 000	82 000	14.4	5.50
24 500	18 400		13.3
			12.4
133 000	105 000	14.4	8.06
			18.8
29 900	23 500		18.4
			19.7
			19.2

Stainless ball bearing with solid grease
Set screw type

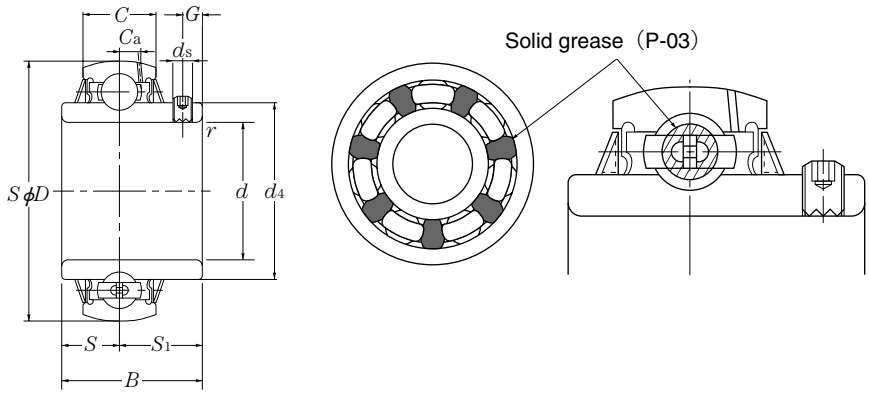

Shaft dia. mm	Bearing number	Nominal dimensions mm										
		d	D	B	C	r_s min.	S	S_1	G	ds	C_a	d_4
20	F-UC204D1/LP03	20	47	31	17	1	12.7	18.3	4.5	M5 × 0.8	3.8	29.6
25	F-UC205D1/LP03	25	52	34.1	17	1	14.3	19.8	5	M5 × 0.8	4	33.9
30	F-UC206D1/LP03	30	62	38.1	19	1	15.9	22.2	5	M6 × 0.75	4.9	40.8
35	F-UC207D1/LP03	35	72	42.9	20	1.5	17.5	25.4	6	M6 × 0.75	5.4	46.8
40	F-UC208D1/LP03	40	80	49.2	21	1.5	19	30.2	8	M8 × 1	6	53
45	F-UC209D1/LP03	45	85	49.2	22	1.5	19	30.2	8	M8 × 1	6.1	57.5
50	F-UC210D1/LP03	50	90	51.6	24	1.5	19	32.6	9	M8 × 1	6.1	62.4

Remarks: 1) The basic dynamic load rating C_r of the bearing is different from a bearing made with standard bearing steel.

Basic load ratings		Factor	Mass
N			kg
dynamic C_r	static C_{or}	f_0	
9 900	6 650	13.2	0.17
10 800	7 850	13.9	0.20
15 000	11 300	13.8	0.30
19 700	15 300	13.8	0.40
22 400	17 800	14.0	0.60
25 200	20 400	14.1	0.68
27 000	23 200	14.4	0.78

Ball bearings
Set screw type

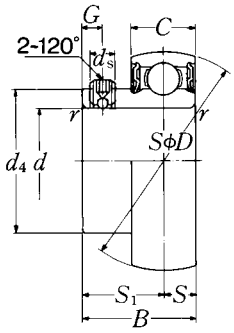

Shaft dia. mm / inch	Bearing number [1]	Nominal dimensions d	D	B	C	mm rs min. / inch S	S1	G	ds	d4
12	AS201	12	40	22	12	0.6	6	16	4.2	M5 × 0.8	24.3
1/2	AS201-008	0.5000	1.5748	0.8661	0.4724	0.024	0.236	0.630	0.165	No.10-32UNF	0.957
15	AS202	15	40	22	12	0.6	6	16	4.2	M5 × 0.8	24.3
9/16	AS202-009	0.5625	1.5748	0.8661	0.4724	0.024	0.236	0.630	0.165	No.10-32UNF	0.957
5/8	AS202-010	0.6250									
17	AS203	17	40	22	12	0.6	6	16	4.2	M5 × 0.8	24.3
11/16	AS203-011	0.6875	1.5748	0.8661	0.4724	0.024	0.236	0.630	0.165	No.10-32UNF	0.957
20	AS204	20	47	25	14	1	7	18	4.2	M5 × 0.8	29.6
3/4	AS204-012	0.7500	1.8504	0.9843	0.5512	0.039	0.276	0.709	0.165	No.10-32UNF	1.165
25	AS205	25	52	27	15	1	7.5	19.5	5	M5 × 0.8	33.9
13/16	AS205-013	0.8125									
7/8	AS205-014	0.8750	2.0472	1.0630	0.5906	0.039	0.295	0.768	0.197	No.10-32UNF	1.335
15/16	AS205-015	0.9375									
1	AS205-100	1.0000									
30	AS206	30	62	29	16	1	8	21	5	M6 × 0.75	40.8
1 1/16	AS206-101	1.0625									
1 1/8	AS206-102	1.1250	2.4409	1.1417	0.6299	0.039	0.315	0.827	0.197	1/4-28UNF	1.606
1 3/16	AS206-103	1.1875									
1 1/4	AS206-104	1.2500									
35	AS207	35	72	34	17	1.5	8.5	25.5	6	M6 × 0.75	46.8
1 1/4	AS207-104	1.2500									
1 5/16	AS207-105	1.3125	2.8346	1.3386	0.6693	0.059	0.335	1.004	0.236	1/4-28UNF	1.843
1 3/8	AS207-106	1.3750									
1 7/16	AS207-107	1.4375									
40	AS208	40	80	38	18	1.5	9	29	8	M8 × 1	53
1 1/2	AS208-108	1.5000	3.1496	1.4961	0.7087	0.059	0.354	1.142	0.315	5/16-24UNF	2.087
1 9/16	AS208-109	1.5625									

Remarks: 1) If relubricatable type is needed, please order with suffix "D1".
2) For inch series bearings, the f_0 factor for calculating equivalent radial load is the same as the metric series.

Basic load ratings		Factor[2)]	Mass
N	lbf		kg lb
dynamic C_r	static C_{or}	f_0	
9 600	4 600	12.8	0.10
2 160	1 030		0.22
9 600	4 600	12.8	0.09
2 160	1 030		0.21
			0.20
9 600	4 600	12.8	0.08
2 160	1 030		0.18
12 800	6 650	13.2	0.13
2 890	1 500		0.29
14 000	7 850	13.9	0.16
			0.42
3 150	1 770		0.40
			0.38
			0.35
19 500	11 300	13.8	0.25
			0.61
4 400	2 540		0.59
			0.57
			0.55
25 700	15 300	13.8	0.38
			1.06
5 750	3 450		0.93
			0.81
			0.69
29 100	17 800	14.0	0.51
6 550	4 000		1.15
			1.06

Ball bearings
Set screw type

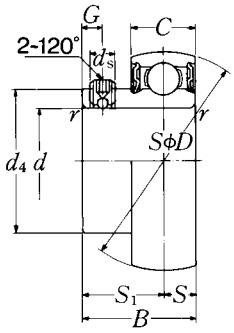

Shaft dia. mm inch	Bearing number [1]	Nominal dimensions d	D	B	C	mm r_s min.	inch S	S_1	G	ds	d_4
45	AS209	45	85	40	19	1.5	9.5	30.5	8	M8 × 1	57.5
1 5/8	AS209-110	1.6250									
1 11/16	AS209-111	1.6875	3.3465	1.5748	0.7480	0.059	0.374	1.201	0.315	5/16-24UNF	2.2638
1 3/4	AS209-112	1.7500									
50	AS210	50	90	42	20	1.5	10	32	9	M8X1	62.4
1 13/16	AS210-113	1.8125									
1 7/8	AS210-114	1.8750	3.5433	1.6535	0.7874	0.059	0.394	1.260	0.354	5/16-24UNF	2.4567
1 15/16	AS210-115	1.9375									
2	AS210-200	2.0000									

Remarks: 1) If relubricatable type is needed, please order with suffix "D1".
2) For inch series bearings, the f_0 factor for calculating equivalent radial load is the same as the metric series.

Basic load ratings		Factor[2)]	Mass
N	lbf		kg lb
dynamic C_r	static C_{or}	f_0	
32 500	20 400	14.1	0.55
			1.39
7 350	4 600		1.32
			1.23
35 000	23 200	14.4	0.65
			1.65
7 900	5 200		1.57
			1.48
			1.39

Ball bearings
Set screw type

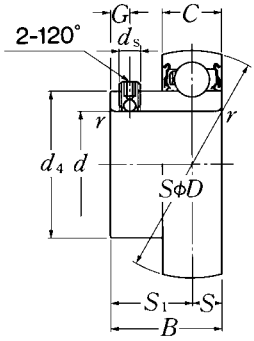

Shaft dia. mm / inch	Bearing number [1]	Nominal dimensions d	D	B	C	mm r_s min. / inch S	S_1	G	ds	d_4
12	**AR201**	12	40	22.5	13	0.6	6.5	16	5	M6 × 0.75	24.4
1/2	**AR201-008**	0.5000	1.5748	0.8858	0.5118	0.024	0.256	0.630	0.197	1/4-28UNF	0.9606
15	**AR202**	15	40	22.5	13	0.6	6.5	16	5	M6 × 0.75	24.4
9/16	**AR202-009**	0.5625	1.5748	0.8858	0.5118	0.024	0.256	0.630	0.197	1/4-28UNF	0.9606
5/8	**AR202-010**	0.6250									
17	**AR203**	17	40	22.5	13	0.6	6.5	16	5	M6 × 0.75	24.4
11/16	**AR203-011**	0.6875	1.5748	0.8858	0.5118	0.024	0.256	0.630	0.197	1/4-28UNF	0.9606
20	**AR204**	20	47	25.5	15	1	7.5	18	5	M6 × 0.75	29.6
3/4	**AR204-012**	0.7500	1.8504	1.0039	0.5906	0.039	0.295	0.709	0.197	1/4-28UNF	1.1654
25	**AR205**	25	52	27	15	1	7.5	19.5	5	M6 × 0.75	33.9
13/16	**AR205-013**	0.8125									
7/8	**AR205-014**	0.8750	2.0472	1.0630	0.5906	0.039	0.295	0.768	0.197	1/4-28UNF	1.3346
15/16	**AR205-015**	0.9375									
1	**AR205-100**	1.0000									
30	**AR206**	30	62	30	18	1	9	21	5	M6 × 0.75	40.8
1 1/16	**AR206-101**	1.0625									
1 1/8	**AR206-102**	1.1250	2.4409	1.1811	0.7087	0.039	0.354	0.827	0.197	1/4-28UNF	1.6063
1 3/16	**AR206-103**	1.1875									
1 1/4	**AR206-104**	1.2500									
35	**AR207**	35	72	35	19	1.5	9.5	25.5	6	M6 × 0.75	46.8
1 1/4	**AR207-104**	1.2500									
1 5/16	**AR207-105**	1.3125	2.8346	1.3780	0.7480	0.059	0.374	1.004	0.236	1/4-28UNF	1.8425
1 3/8	**AR207-106**	1.3750									
1 7/16	**AR207-107**	1.4375									
40	**AR208**	40	80	40	22	1.5	11	29	8	M8 × 1	53
1 1/2	**AR208-108**	1.5000	3.1496	1.5748	0.8661	0.059	0.433	1.142	0.315	5/16-24UNF	2.0866
1 9/16	**AR208-109**	1.5625									

Remarks: 1) If relubricatable type is needed, please order with suffix "D1".
2) For inch series bearings, the f_0 factor for calculating equivalent radial load is the same as the metric series.

Basic load ratings		Factor[2)]	Mass
N dynamic C_r	lbf static C_{or}	f_0	kg lb
9 600 2 160	4 600 1 030	12.8	0.11 0.24
9 600 2 160	4 600 1 030	12.8	0.10 0.23 0.22
9 600 2 160	4 600 1 030	12.8	0.09 0.20
12 800 2 890	6 650 1 500	13.2	0.14 0.31
14 000 3 150	7 850 1 770	13.9	0.17 0.44 0.42 0.40 0.37
19 500 4 400	11 300 2 540	13.8	0.26 0.63 0.61 0.59 0.57
25 700 5 750	15 300 3 450	13.8	0.39 1.10 0.97 0.85 0.73
29 100 6 550	17 800 4 000	14.0	0.54 1.24 1.15

Ball bearings
Set screw type

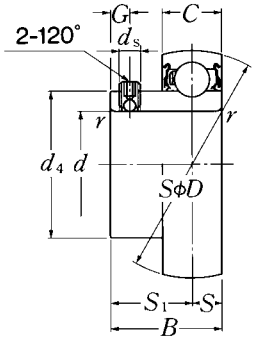

Shaft dia. mm / inch	Bearing number [1]	Nominal dimensions									
		mm / inch				mm	inch				
		d	D	B	C	r_s min.	S	S_1	G	ds	d_4
45	**AR209**	45	85	41.5	22	1.5	11	30.5	8	M8X1	57.5
1 5/8	**AR209-110**	1.6250									
1 11/16	**AR209-111**	1.6875	3.3465	1.6339	0.8661	0.059	0.433	1.201	0.315	5/16-24UNF	2.2638
1 3/4	**AR209-112**	1.7500									
50	**AR210**	50	90	43	22	1.5	11	32	9	M8X1	62.4
1 13/16	**AR210-113**	1.8125									
1 7/8	**AR210-114**	1.8750	3.5433	1.6929	0.8661	0.059	0.433	1.260	0.354	5/16-24UNF	2.4567
1 15/16	**AR210-115**	1.9375									
2	**AR210-200**	2.0000									

Remarks: 1) If relubricatable type is needed, please order with suffix "D1".
2) For inch series bearings, the f_0 factor for calculating equivalent radial load is the same as the metric series.

Basic load ratings		Factor[2)]	Mass
N	lbf		kg lb
dynamic C_r	static C_{or}	f_0	
32 500	20 400	14.1	0.61
			1.54
7 350	4 600		1.46
			1.39
35 000	23 200	14.4	0.70
			1.76
7 900	5 200		1.68
			1.59
			1.50

Ball bearings
Eccentric locking collar type

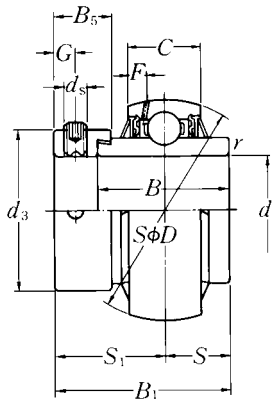

Shaft dia. mm / inch	Bearing number	Nominal dimensions d	D	B1	B	C	rs min. (mm / inch)	S	S1	G	ds	d3
20	**UEL204D1W3**	20	47	43.7	34.2	17	1	17.1	26.6	4.8	M6 × 0.75	33
3/4	**UEL204-012D1W3**	0.7500	1.8504	1.720	1.3465	0.6693	0.039	0.673	1.047	0.189	1/4-28UNF	1.299
25	**UEL205D1W3**	25	52	44.4	34.9	17	1	17.45	26.9	4.8	M6 × 0.75	38
13/16	**UEL205-013D1W3**	0.8125										
7/8	**UEL205-014D1W3**	0.8750	2.0472	1.748	1.3740	0.6693	0.039	0.687	1.059	0.189	1/4-28UNF	1.496
15/16	**UEL205-015D1W3**	0.9375										
1	**UEL205-100D1W3**	1.0000										
30	**UEL206D1W3**	30	62	48.4	36.5	19	1	18.25	30.1	6	M8 × 1	44.5
1 1/16	**UEL206-101D1W3**	1.0625										
1 1/8	**UEL206-102D1W3**	1.1250	2.4409	1.906	1.4370	0.7480	0.039	0.719	1.185	0.236	5/16-24UNF	1.752
1 3/16	**UEL206-103D1W3**	1.1875										
1 1/4	**UEL206-104D1W3**	1.2500										
35	**UEL207D1W3**	35	72	51.1	37.6	20	1.5	18.8	32.3	6.8	M10 × 1.25	55.5
1 1/4	**UEL207-104D1W3**	1.2500										
1 5/16	**UEL207-105D1W3**	1.3125	2.8346	2.012	1.4803	0.7874	0.059	0.740	1.272	0.268	3/8-24UNF	2.185
1 3/8	**UEL207-106D1W3**	1.3750										
1 7/16	**UEL207-107D1W3**	1.4375										
40	**UEL208D1W3**	40	80	56.3	42.8	21	1.5	21.4	34.9	6.8	M10 × 1.25	60
1 1/2	**UEL208-108D1W3**	1.5000	3.1496	2.217	1.6850	0.8268	0.059	0.843	1.374	0.268	3/8-24UNF	2.362
1 9/16	**UEL208-109D1W3**	1.5625										
45	**UEL209D1W3**	45	85	56.3	42.8	22	1.5	21.4	34.9	6.8	M10 × 1.25	63.5
1 5/8	**UEL209-110D1W3**	1.6250										
1 11/16	**UEL209-111D1W3**	1.6875	3.3465	2.217	1.6850	0.8661	0.059	0.843	1.374	0.268	3/8-24UNF	2.500
1 3/4	**UEL209-112D1W3**	1.7500										
50	**UEL210D1W3**	50	90	62.7	49.2	24	1.5	24.6	38.1	6.8	M10 × 1.25	69.5
1 13/16	**UEL210-113D1W3**	1.8125										
1 7/8	**UEL210-114D1W3**	1.8750	3.5433	2.469	1.9370	0.9449	0.059	0.969	1.500	0.268	3/8-24UNF	2.736
1 15/16	**UEL210-115D1W3**	1.9375										
2	**UEL210-200D1W3**	2.0000										

Remarks: 1) For inch series bearings, the f_0 factor for calculating equivalent radial load is the same as the metric series.

Nominal dimensions		Basic load ratings		Factor[1)]	Mass
mm	inch	N	lbf		kg lb
		dynamic	static		
B_5	F	C_r	C_{or}	f_0	
13.5	4.7	12 800	6 650	13.2	0.23
0.531	0.185	2 890	1 500		0.45
13.5	4.5	14 000	7 850	13.9	0.27
					0.61
0.531	0.177	3 150	1 770		0.58
					0.55
					0.51
15.9	4.6	19 500	11 300	13.8	0.45
					0.94
0.626	0.181	4 400	2 540		0.89
					0.84
					0.80
17.5	4.6	25 700	15 300	13.8	0.60
					1.45
0.689	0.181	5 750	3 450		1.40
					1.35
					1.28
18.3	4.5	29 100	17 800	14.0	0.78
0.720	0.177	6 550	4 000		1.90
					1.82
18.3	4.9	32 500	20 400	14.1	0.80
					2.05
0.720	0.193	7 350	4 600		1.97
					1.88
18.3	5.9	35 000	23 200	14.4	0.96
					2.46
0.720	0.232	7 900	5 200		2.36
					2.25
					2.09

Ball bearings
Eccentric locking collar type

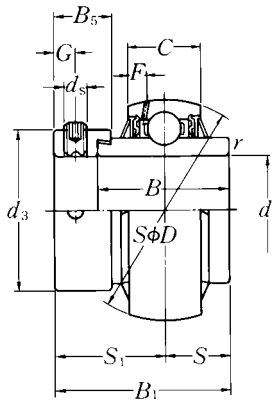

Shaft dia. mm / inch	Bearing number	Nominal dimensions d	D	B1	B	C	rs min.	S	S1	G	ds	d3
		mm						inch				
55	UEL211D1W3	55	100	71.4	55.5	25	2	27.75	43.6	8	M10 × 1.25	76
2	UEL211-200D1W3	2.0000										
2 1/16	UEL211-201D1W3	2.0625	3.9370	2.811	2.1850	0.9843	0.079	1.093	1.717	0.315	3/8-24UNF	2.992
2 1/8	UEL211-202D1W3	2.1250										
2 3/16	UEL211-203D1W3	2.1875										
60	UEL212D1W3	60	110	77.8	61.9	27	2	30.95	46.8	8	M10 × 1.25	84
2 1/4	UEL212-204D1W3	2.2500										
2 5/16	UEL212-205D1W3	2.3125	4.3307	3.063	2.4370	1.0630	0.079	1.219	1.843	0.315	3/8-24UNF	3.307
2 3/8	UEL212-206D1W3	2.3750										
2 7/16	UEL212-207D1W3	2.4375										
65	UEL213D1W3	65	120	85.7	68.3	32	2	34.15	51.55	8.7	M10 × 1.25	97
2 1/2	UEL213-208D1W3	2.5000	4.7244	3.374	2.6890	1.2598	0.079	1.344	2.030	0.343	3/8-24UNF	3.819
2 9/16	UEL213-209D1W3	2.5625										
70	UEL214D1W3	70	125	85.7	68.3	33	2	34.15	51.55	8.7	M10 × 1.25	97
2 5/8	UEL214-210D1W3	2.6250										
2 11/16	UEL214-211D1W3	2.6875	4.9213	3.374	2.6890	1.2992	0.079	1.344	2.030	0.343	3/8-24UNF	3.819
2 3/4	UEL214-212D1W3	2.7500										
75	UEL215D1W3	75	130	92	74.6	34	2	37.3	54.7	8.7	M10 × 1.25	102
2 13/16	UEL215-213D1W3	2.8125										
2 7/8	UEL215-214D1W3	2.8750	5.1181	3.622	2.9370	1.3386	0.079	1.469	2.154	0.343	3/8-24UNF	4.016
2 15/16	UEL215-215D1W3	2.9375										
3	UEL215-300D1W3	3.0000										

Remarks: 1) For inch series bearings, the f_0 factor for calculating equivalent radial load is the same as the metric series.

Nominal dimensions		Basic load ratings		Factor[1)]	Mass
mm	inch	N	lbf		kg lb
		dynamic	static		
B_5	F	C_r	C_{or}	f_0	
20.7	6.0	43 500	29 200	14.3	1.32
0.815	0.236	9 750	6 550		3.28
					3.12
					3.02
					2.90
22.3	6.2	52 500	36 000	14.3	1.79
0.878	0.244	11 800	8 150		4.38
					4.22
					4.05
					3.88
23.8	8.7	57 500	40 000	14.4	2.54
0.937	0.343	12 900	9 000		5.47
					5.30
23.8	8.8	62 000	44 000	14.5	2.47
0.937	0.346	14 000	9 900		5.67
					5.45
					5.18
23.8	9.0	66 000	49 500	14.7	2.68
0.937	0.354	14 900	11 100		6.39
					6.15
					5.91
					5.60

Ball bearings
Eccentric locking collar type

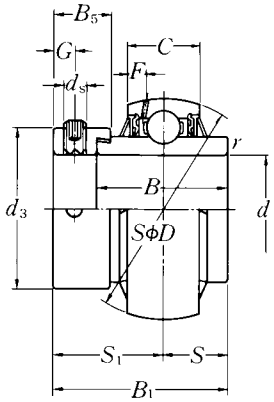

Shaft dia. mm / inch	Bearing number	Nominal dimensions mm / inch: d	D	B1	B	C	rs min.	S	S1	G	ds	d3
25	UEL305D1W3	25	62	46.8	34.9	20	1.5	16.7	30.1	6	M8 × 1	42.8
13/16	UEL305-013D1W3	0.8125										
7/8	UEL305-014D1W3	0.8750	2.4409	1.843	1.3740	0.7874	0.059	0.657	1.185	0.236	5/16-24UNF	1.685
15/16	UEL305-015D1W3	0.9375										
1	UEL305-100D1W3	1.0000										
30	UEL306D1W3	30	72	50	36.5	23	1.5	17.5	32.5	6.7	M8 × 1	50
1 1/16	UEL306-101D1W3	1.0625										
1 1/8	UEL306-102D1W3	1.1250	2.8346	1.969	1.4370	0.9055	0.059	0.689	1.280	0.264	5/16-24UNF	1.969
1 3/16	UEL306-103D1W3	1.1875										
35	UEL307D1W3	35	80	51.6	38.1	25	2	18.3	33.3	6.7	M8 × 1	55
1 1/4	UEL307-104D1W3	1.2500										
1 5/16	UEL307-105D1W3	1.3125	3.1496	2.031	1.5000	0.9843	0.079	0.720	1.311	0.264	5/16-24UNF	2.165
1 3/8	UEL307-106D1W3	1.3750										
1 7/16	UEL307-107D1W3	1.4375										
40	UEL308D1W3	40	90	57.1	41.3	27	2	19.8	37.3	8	M10 × 1.25	63.5
1 1/2	UEL308-108D1W3	1.5000	3.5433	2.248	1.6260	1.0630	0.079	0.780	1.469	0.315	3/8-24UNF	2.500
1 9/16	UEL308-109D1W3	1.5625										
45	UEL309D1W3	45	100	58.7	42.9	29	2	19.8	38.9	8	M10 × 1.25	70
1 5/8	UEL309-110D1W3	1.6250										
1 11/16	UEL309-111D1W3	1.6875	3.9370	2.311	1.6890	1.1417	0.079	0.780	1.531	0.315	3/8-24UNF	2.756
1 3/4	UEL309-112D1W3	1.7500										
50	UEL310D1W3	50	110	66.6	49.2	32	2.5	24.6	42	8.7	M10 × 1.25	76.2
1 13/16	UEL310-113D1W3	1.8125										
1 7/8	UEL310-114D1W3	1.8750	4.3307	2.622	1.9370	1.2598	0.098	0.969	1.654	0.343	3/8-24UNF	3.000
1 15/16	UEL310-115D1W3	1.9375										
55	UEL311D1W3	55	120	73	55.6	34	2.5	27.8	45.2	8.7	M10 × 1.25	83
2	UEL311-200D1W3	2.0000										
2 1/16	UEL311-201D1W3	2.0625	4.7244	2.874	2.1890	1.3386	0.098	1.094	1.780	0.343	3/8-24UNF	3.268
2 1/8	UEL311-202D1W3	2.1250										
2 3/16	UEL311-203D1W3	2.1875										

Remarks: 1) For inch series bearings, the f_0 factor for calculating equivalent radial load is the same as the metric series.

Nominal dimensions		Basic load ratings		Factor[1)]	Mass
mm	inch	N	lbf		kg lb
		dynamic	static		
B_5	F	C_r	C_{or}	f_0	
15.9	5.0	21 200	10 900	12.6	0.43
					1.09
0.626	0.197	4 750	2 460		1.05
					1.01
					0.96
17.5	5.9	26 700	15 000	13.3	0.69
					1.57
0.689	0.232	6 000	3 400		1.51
					1.45
17.5	6.8	33 500	19 100	13.1	0.78
					1.92
0.689	0.268	7 500	4 300		1.84
					1.77
					1.69
20.6	7.4	40 500	24 000	13.2	1.10
0.811	0.291	9 150	5 400		2.58
					2.49
20.6	7.4	53 000	32 000	13.1	1.40
					3.36
0.811	0.291	11 900	7 200		3.26
					3.15
22.2	8.1	62 000	38 500	13.2	1.84
					4.40
0.874	0.319	13 900	8 600		4.29
					4.15
22.2	8.5	71 500	45 000	13.2	2.36
					5.58
0.874	0.335	16 100	10 100		5.39
					5.25
					5.08

Ball bearings
Eccentric locking collar type

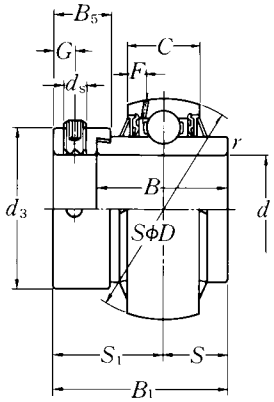

Shaft dia. mm / inch	Bearing number	Nominal dimensions mm / inch: d	D	B1	B	C	rs min.	S	S1	G	ds	d3
60	UEL312D1W3	60	130	79.4	61.9	36	2.5	30.95	48.45	8.7	M10 × 1.25	89
2 1/4	UEL312-204D1W3	2.2500										
2 5/16	UEL312-205D1W3	2.3125	5.1181	3.126	2.4370	1.4173	0.098	1.219	1.907	0.343	3/8-24UNF	3.504
2 3/8	UEL312-206D1W3	2.3750										
2 7/16	UEL312-207D1W3	2.4375										
65	UEL313D1W3	65	140	85.7	65.1	39	2.5	32.55	53.15	10.3	M12 × 1.5	97
2 1/2	UEL313-208D1W3	2.5000	5.5118	3.374	2.5630	1.5354	0.098	1.281	2.093	0.406	1/2-20UNF	3.819
2 9/16	UEL313-209D1W3	2.5625										
70	UEL314D1W3	70	150	92.1	68.3	41	2.5	34.15	57.95	10.3	M12 × 1.5	102
2 5/8	UEL314-210D1W3	2.6250										
2 11/16	UEL314-211D1W3	2.6875	5.9055	3.626	2.6890	1.6142	0.098	1.344	2.281	0.406	1/2-20UNF	4.016
2 3/4	UEL314-212D1W3	2.7500										
75	UEL315D1W3	75	160	100	74.6	43	2.5	37.3	62.7	12.7	M16 × 1.5	113
2 13/16	UEL315-213D1W3	2.8125										
2 7/8	UEL315-214D1W3	2.8750	6.2992	3.937	2.9370	1.6929	0.098	1.469	2.469	0.500	5/8-18UNF	4.449
2 15/16	UEL315-215D1W3	2.9375										
3	UEL315-300D1W3	3.0000										
80	UEL316D1W3	80	170	106.4	81	45	2.5	40.5	65.9	12.7	M16 × 1.5	119
3 1/16	UEL316-301D1W3	3.0625										
3 1/8	UEL316-302D1W3	3.1250	6.6929	4.189	3.1890	1.7717	0.098	1.594	2.594	0.500	5/8-18UNF	4.685
3 3/16	UEL316-303D1W3	3.1875										
85	UEL317D1W3	85	180	109.5	84.1	47	3	42.05	67.45	12.7	M16 × 1.5	127
3 1/4	UEL317-304D1W3	3.2500										
3 5/16	UEL317-305D1W3	3.3125	7.0866	4.311	3.3110	1.8504	0.118	1.656	2.656	0.500	5/8-18UNF	5.000
3 7/16	UEL317-307D1W3	3.4375										
90	UEL318D1W3	90	190	115.9	87.3	49	3	43.65	72.25	14.3	M20 × 1.5	133
3 7/16	UEL318-307D1W3	3.4375	7.4803	4.563	3.4370	1.9291	0.118	1.719	2.844	0.563	3/4-16UNF	5.236
3 1/2	UEL318-308D1W3	3.5000										
95	UEL319D1W3	95	200	122.3	93.7	51	3	38.9	83.4	14.3	M20 × 1.5	140
3 5/8	UEL319-310D1W3	3.6250										
3 11/16	UEL319-311D1W3	3.6875	7.8740	4.815	3.6890	2.0079	0.118	1.531	3.283	0.563	3/4-16UNF	5.512
3 3/4	UEL319-312D1W3	3.7500										

Remarks: 1) For inch series bearings, the f_0 factor for calculating equivalent radial load is the same as the metric series.

Nominal dimensions		Basic load ratings		Factor[1)]	Mass
mm	inch	N	lbf		kg lb
		dynamic	static		
B_5	F	C_r	C_{or}	f_0	
23.9	9.0	82 000	52 000	13.2	2.94
					6.80
0.941	0.354	18 400	11 700		6.65
					6.48
					6.19
27	10.1	92 500	60 000	13.2	3.67
1.063	0.398	20 800	13 400		8.49
					8.27
30.2	10.5	104 000	68 000	13.2	4.40
					10.4
1.189	0.413	23 400	15 300		10.2
					9.96
31.8	11.0	113 000	77 000	13.2	5.34
					13.2
1.252	0.433	25 500	17 400		12.9
					12.7
					12.5
31.8	11.4	123 000	86 500	13.3	6.70
					14.9
1.252	0.449	27 600	19 500		14.8
					14.6
31.8	12.0	133 000	97 000	13.3	8.00
					18.0
1.252	0.472	29 800	21 800		17.7
					17.0
36.5	12.3	143 000	107 000	13.3	9.10
1.437	0.484	32 000	24 100		20.7
					20.2
36.5	12.8	153 000	119 000	13.3	10.4
					23.4
1.437	0.504	34 500	26 600		23.0
					22.6

Ball bearings
Eccentric locking collar type

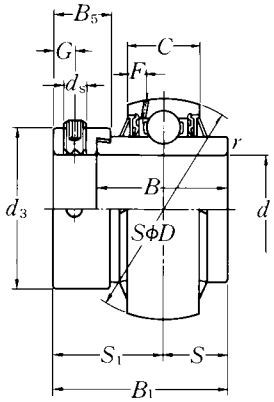

Shaft dia. mm / inch	Bearing number	Nominal dimensions										
		mm / inch				mm		inch				
		d	D	B_1	B	C	r_s min.	S	S_1	G	ds	d_3
100	**UEL320D1W3**	100	215	128.6	100	55	3	50	78.6	14.3	M20 × 1.5	146
3 13/16	**UEL320-313D1W3**	3.8125										
3 7/8	**UEL320-314D1W3**	3.8750	8.4646	5.063	3.9370	2.1654	0.118	1.969	3.094	0.563	3/4-16UNF	5.748
3 15/16	**UEL320-315D1W3**	3.9375										
4	**UEL320-400D1W3**	4.0000										
105	**UEL321D1W3**	105	225	139.7	104.8	57	3	48.4	91.3	17.5	M20 × 1.5	157
110	**UEL322D1W3**	110	240	141.3	106.4	59	3	49.2	92.1	17.5	M20 × 1.5	168

Remarks: 1) For inch series bearings, the f_0 factor for calculating equivalent radial load is the same as the metric series.

Nominal dimensions		Basic load ratings		Factor[1)]	Mass
mm	inch	N	lbf		kg lb
		dynamic	static		
B_5	F	C_r	C_{or}	f_0	
36.5	13.5	173 000	141 000	13.2	13.0 28.5 28.0 27.6 27.0
1.437	0.531	39 000	31 500		
42.8	13.9	184 000	153 000	13.2	14.6
42.8	13.9	205 000	179 000	13.1	17.2

Ball bearings
Eccentric locking collar type

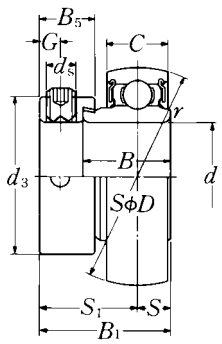

Shaft dia. mm / inch	Bearing number [1]	Nominal dimensions mm / inch d	D	B_1	B	C	r_s min.	S	S_1	G	ds	d_3
12	AEL201W3	12	40	28.6	19	12	0.6	6.5	22.1	4.8	M6 × 0.75	29
1/2	AEL201-008W3	0.5000	1.5748	1.126	0.7480	0.4724	0.024	0.256	0.870	0.189	1/4-28UNF	1.142
15	AEL202W3	15	40	28.6	19	12	0.6	6.5	22.1	4.8	M6 × 0.75	29
9/16	AEL202-009W3	0.5625	1.5748	1.126	0.7480	0.4724	0.024	0.256	0.870	0.189	1/4-28UNF	1.142
5/8	AEL202-010W3	0.6250										
17	AEL203W3	17	40	28.6	19	12	0.6	6.5	22.1	4.8	M6 × 0.75	29
11/16	AEL203-011W3	0.6875	1.5748	1.126	0.7480	0.4724	0.024	0.256	0.870	0.189	1/4-28UNF	1.142
20	AEL204W3	20	47	31	21.5	14	1	7.5	23.5	4.8	M6 × 0.75	33
3/4	AEL204-012W3	0.7500	1.8504	1.220	0.8465	0.5512	0.039	0.295	0.925	0.189	1/4-28UNF	1.299
25	AEL205W3	25	52	31	21.5	15	1	7.5	23.5	4.8	M6 × 0.75	38
13/16	AEL205-013W3	0.8125										
7/8	AEL205-014W3	0.8750	2.0472	1.220	0.8465	0.5906	0.039	0.295	0.925	0.189	1/4-28UNF	1.496
15/16	AEL205-015W3	0.9375										
1	AEL205-100W3	1.0000										
30	AEL206W3	30	62	35.7	23.8	16	1	9	26.7	6	M8 × 1	44.5
1 1/16	AEL206-101W3	1.0625										
1 1/8	AEL206-102W3	1.1250	2.4409	1.406	0.9370	0.6299	0.039	0.354	1.051	0.236	5/16-24UNF	1.752
1 3/16	AEL206-103W3	1.1875										
1 1/4	AEL206-104W3	1.2500										
35	AEL207W3	35	72	38.9	25.4	17	1.5	9.5	29.4	6.8	M10 × 1.25	55.5
1 1/4	AEL207-104W3	1.2500										
1 5/16	AEL207-105W3	1.3125	2.8346	1.531	1.0000	0.6693	0.059	0.374	1.157	0.268	3/8-24UNF	2.185
1 3/8	AEL207-106W3	1.3750										
1 7/16	AEL207-107W3	1.4375										
40	AEL208W3	40	80	43.7	30.2	18	1.5	11	32.7	6.8	M10 × 1.25	60
1 1/2	AEL208-108W3	1.5000	3.1496	1.720	1.1890	0.7087	0.059	0.433	1.287	0.268	3/8-24UNF	2.362
1 9/16	AEL208-109W3	1.5625										
45	AEL209W3	45	85	43.7	30.2	19	1.5	11	32.7	6.8	M10 × 1.25	63.5
1 5/8	AEL209-110W3	1.6250										
1 11/16	AEL209-111W3	1.6875	3.3465	1.720	1.1890	0.7480	0.059	0.433	1.287	0.268	3/8-24UNF	2.500
1 3/4	AEL209-112W3	1.7500										

Remarks: 1) If relubricatable type is needed, please order with suffix "D1".
2) For inch series bearings, the f_0 factor for calculating equivalent radial load is the same as the metric series.

Nominal dimensions		Basic load ratings		Factor[2)]	Mass
mm	inch	N	lbf		kg lb
B_5		dynamic C_r	static C_{or}	f_0	
13.6		9 600	4 600	12.8	0.12
0.535		2 160	1 030		0.26
13.6		9 600	4 600	12.8	0.11
0.535		2 160	1 030		0.26
					0.24
13.6		9 600	4 600	12.8	0.11
0.535		2 160	1 030		0.23
13.5		12 800	6 650	13.2	0.17
0.531		2 890	1 500		0.35
13.5		14 000	7 850	13.9	0.22
					0.51
0.531		3 150	1 770		0.48
					0.45
					0.42
15.9		19 500	11 300	13.8	0.31
					0.74
0.626		4 400	2 540		0.73
					0.66
					0.61
17.5		25 700	15 300	13.8	0.50
					1.15
0.689		5 750	3 450		1.10
					1.04
					0.98
18.3		29 100	17 800	14.0	0.66
0.720		6 550	4 000		1.41
					1.34
18.3		32 500	20 400	14.1	0.72
					1.79
0.720		7 350	4 600		1.70
					1.61

Ball bearings
Eccentric locking collar type

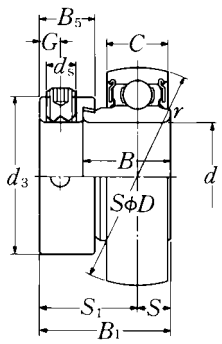

Shaft dia. mm / inch	Bearing number [1]	Nominal dimensions mm / inch d	D	B_1	B	C	r_s min.	S	S_1	G	ds	d_3
50	**AEL210W3**	50	90	43.7	30.2	20	1.5	11	32.7	6.8	M10 × 1.25	69.5
1 13/16	**AEL210-113W3**	1.8125	3.5433	1.720	1.1890	0.7874	0.059	0.433	1.287	0.268	3/8-24UNF	2.736
1 7/8	**AEL210-114W3**	1.8750										
1 15/16	**AEL210-115W3**	1.9375										
2	**AEL210-200W3**	2.0000										
55	**AEL211W3**	55	100	48.4	32.5	21	2	12	36.4	8	M10 × 1.25	76
2	**AEL211-200W3**	2.0000	3.9370	1.906	1.2795	0.8268	0.079	0.472	1.433	0.315	3/8-24UNF	2.992
2 1/16	**AEL211-201W3**	2.0625										
2 1/8	**AEL211-202W3**	2.1250										
2 3/16	**AEL211-203W3**	2.1875										
60	**AEL212W3**	60	110	53.1	37.2	22	2	13.5	39.6	8	M10 × 1.25	84
2 1/4	**AEL212-204W3**	2.2500	4.3307	2.091	1.4646	0.8661	0.079	0.531	1.559	0.315	3/8-24UNF	3.307
2 5/16	**AEL212-205W3**	2.3125										
2 3/8	**AEL212-206W3**	2.3750										
2 7/16	**AEL212-207W3**	2.4375										

Remarks: 1) If relubricatable type is needed, please order with suffix "D1".
2) For inch series bearings, the f_0 factor for calculating equivalent radial load is the same as the metric series.

Nominal dimensions		Basic load ratings		Factor[2)]	Mass	
mm	inch	N	lbf		kg	lb
B_5		dynamic C_r	static C_{or}	f_0		
18.3		35 000	23 200	14.4	0.72	
						1.81
0.720		7 900	5 200			1.72
						1.63
						1.54
20.7		43 500	29 200	14.3	0.98	
						2.45
0.815		9 750	6 550			2.34
						2.23
						2.12
22.3		52 500	36 000	14.3	1.31	
						3.13
0.878		11 800	8 150			3.00
						2.87
						2.71

Ball bearings
Eccentric locking collar type

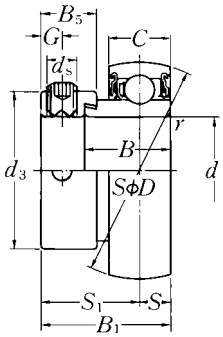

Shaft dia. mm / inch	Bearing number [1]	Nominal dimensions d	D	B1	B	C	rs min. (mm / inch)	S	S1	G	ds	d3
12	JEL201W3	12	40	28.6	19	13	0.6	6.5	22.1	4.8	M6 × 0.75	29
1/2	JEL201-008W3	0.5000	1.5748	1.126	0.7480	0.5118	0.024	0.256	0.870	0.189	1/4-28UNF	1.142
15	JEL202W3	15	40	28.6	19	13	0.6	6.5	22.1	4.8	M6 × 0.75	29
9/16	JEL202-009W3	0.5625	1.5748	1.126	0.7480	0.5118	0.024	0.256	0.870	0.189	1/4-28UNF	1.142
5/8	JEL202-010W3	0.6250										
17	JEL203W3	17	40	28.6	19	13	0.6	6.5	22.1	4.8	M6 × 0.75	29
11/16	JEL203-011W3	0.6875	1.5748	1.126	0.7480	0.5118	0.024	0.256	0.870	0.189	1/4-28UNF	1.142
20	JEL204W3	20	47	31	21.5	15	1	7.5	23.5	4.8	M6 × 0.75	33
3/4	JEL204-012W3	0.7500	1.8504	1.220	0.8465	0.5906	0.039	0.295	0.925	0.189	1/4-28UNF	1.299
25	JEL205W3	25	52	31	21.5	15	1	7.5	23.5	4.8	M6 × 0.75	38
13/16	JEL205-013W3	0.8125										
7/8	JEL205-014W3	0.8750	2.0472	1.220	0.8465	0.5906	0.039	0.295	0.925	0.189	1/4-28UNF	1.496
15/16	JEL205-015W3	0.9375										
1	JEL205-100W3	1.0000										
30	JEL206W3	30	62	35.7	23.8	18	1	9	26.7	6	M8 × 1	44.5
1 1/16	JEL206-101W3	1.0625										
1 1/8	JEL206-102W3	1.1250	2.4409	1.406	0.9370	0.7087	0.039	0.354	1.051	0.236	5/16-24UNF	1.752
1 3/16	JEL206-103W3	1.1875										
1 1/4	JEL206-104W3	1.2500										
35	JEL207W3	35	72	38.9	25.4	19	1.5	9.5	29.4	6.8	M10 × 1.25	55.5
1 1/4	JEL207-104W3	1.2500										
1 5/16	JEL207-105W3	1.3125	2.8346	1.531	1.0000	0.7480	0.059	0.374	1.157	0.268	3/8-24UNF	2.185
1 3/8	JEL207-106W3	1.3750										
1 7/16	JEL207-107W3	1.4375										
40	JEL208W3	40	80	43.7	30.2	22	1.5	11	32.7	6.8	M10 × 1.25	60
1 1/2	JEL208-108W3	1.5000	3.1496	1.720	1.1890	0.8661	0.059	0.433	1.287	0.268	3/8-24UNF	2.362
1 9/16	JEL208-109W3	1.5625										
45	JEL209W3	45	85	43.7	30.2	22	1.5	11	32.7	6.8	M10 × 1.25	63.5
1 5/8	JEL209-110W3	1.6250										
1 11/16	JEL209-111W3	1.6875	3.3465	1.720	1.1890	0.8661	0.059	0.433	1.287	0.268	3/8-24UNF	2.500
1 3/4	JEL209-112W3	1.7500										

Remarks: 1) If relubricatable type is needed, please order with suffix "D1".
2) For inch series bearings, the f_0 factor for calculating equivalent radial load is the same as the metric series.

Nominal dimensions		Basic load ratings		Factor[2)]	Mass	
mm	inch	N	lbf		kg	lb
B_5		dynamic C_r	static C_{or}	f_0		
13.6		9 600	4 600	12.8	0.12	
	0.535	2 160	1 030			0.25
13.6		9 600	4 600	12.8	0.10	
	0.535	2 160	1 030			0.24
						0.22
13.6		9 600	4 600	12.8	0.09	
	0.535	2 160	1 030			0.20
13.5		12 800	6 650	13.2	0.16	
	0.531	2 890	1 500			0.37
13.5		14 000	7 850	13.9	0.19	
						0.50
	0.531	3 150	1 770			0.47
						0.44
						0.41
15.9		19 500	11 300	13.8	0.33	
						0.78
	0.626	4 400	2 540			0.73
						0.69
						0.64
17.5		25 700	15 300	13.8	0.50	
						1.22
	0.689	5 750	3 450			1.16
						1.11
						1.05
18.3		29 100	17 800	14.0	0.65	
	0.720	6 550	4 000			1.53
						1.46
18.3		32 500	20 400	14.1	0.76	
						1.87
	0.720	7 350	4 600			1.79
						1.72

Ball bearings
Eccentric locking collar type

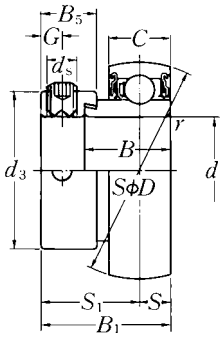

Shaft dia. mm / inch	Bearing number [1]	Nominal dimensions d (mm)	D	B1	B	C	rs min. (mm)	S (inch)	S1	G	ds	d3
50	**JEL210W3**	50	90	43.7	30.2	22	1.5	11	32.7	6.8	M10X1.25	69.5
1 13/16	**JEL210-113W3**	1.8125										
1 7/8	**JEL210-114W3**	1.8750	3.5433	1.720	1.1890	0.8661	0.059	0.433	1.287	0.268	3/8-24UNF	2.736
1 15/16	**JEL210-115W3**	1.9375										
2	**JEL210-200W3**	2.0000										
55	**JEL211W3**	55	100	48.4	32.5	24	2	12	36.4	8	M10X1.25	76
2	**JEL211-200W3**	2.0000										
2 1/16	**JEL211-201W3**	2.0625	3.9370	1.906	1.2795	0.9449	0.079	0.472	1.433	0.315	3/8-24UNF	2.992
2 1/8	**JEL211-202W3**	2.1250										
2 3/16	**JEL211-203W3**	2.1875										
60	**JEL212W3**	60	110	53.1	37.2	27	2	13.5	39.6	8	M10X1.25	84
2 1/4	**JEL212-204W3**	2.2500										
2 5/16	**JEL212-205W3**	2.3125	4.3307	2.091	1.4646	1.0630	0.079	0.531	1.559	0.315	3/8-24UNF	3.307
2 3/8	**JEL212-206W3**	2.3750										
2 7/16	**JEL212-207W3**	2.4375										

Remarks: 1) If relubricatable type is needed, please order with suffix "D1".
2) For inch series bearings, the f_0 factor for calculating equivalent radial load is the same as the metric series.

Nominal dimensions		Basic load ratings		Factor[2)]	Mass	
mm	inch	N	lbf		kg	lb
B_5		dynamic C_r	static C_{or}	f_0		
18.3		35 000	23 200		0.84	
						2.09
0.720		7 900	5 200	14.4		2.01
						1.92
						1.81
20.7		43 500	29 200		1.13	
						2.78
0.815		9 750	6 550	14.3		2.67
						2.56
						2.45
22.3		52 500	36 000		1.48	
						3.51
0.878		11 800	8 150	14.3		3.37
						3.24
						3.09

Ball bearings
Eccentric locking collar type

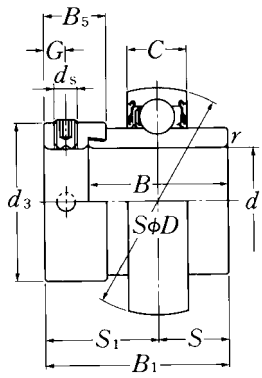

Shaft dia. mm / inch	Bearing number [1]	Nominal dimensions d	D	B1	B	C	rs min. (mm / inch)	S	S1	G	ds	d3
20	REL204W3	20	47	43.7	34.2	15	1	17.1	26.6	4.8	M6 × 0.75	33.0
3/4	REL204-012W3	0.7500	1.8504	1.720	1.3465	0.5906	0.039	0.673	1.047	0.189	1/4-28UNF	1.299
25	REL205W3	25	52	44.4	34.9	15	1	17.45	26.9	4.8	M6 × 0.75	38.0
13/16	REL205-013W3	0.8125										
7/8	REL205-014W3	0.8750	2.0472	1.748	1.3740	0.5906	0.039	0.687	1.059	0.189	1/4-28UNF	1.496
15/16	REL205-015W3	0.9375										
1	REL205-100W3	1.0000										
30	REL206W3	30	62	48.4	36.5	18	1	18.25	30.1	6	M8 × 1	44.5
1 1/16	REL206-101W3	1.0625										
1 1/8	REL206-102W3	1.1250	2.4409	1.906	1.4370	0.7087	0.039	0.719	1.185	0.236	5/16-24UNF	1.752
1 3/16	REL206-103W3	1.1875										
1 1/4	REL206-104W3	1.2500										
35	REL207W3	35	72	51.1	37.6	19	1.5	18.8	32.3	6.8	M10 × 1.25	55.5
1 1/4	REL207-104W3	1.2500										
1 5/16	REL207-105W3	1.3125	2.8346	2.012	1.4803	0.7480	0.059	0.740	1.272	0.268	3/8-24UNF	2.185
1 3/8	REL207-106W3	1.3750										
1 7/16	REL207-107W3	1.4375										
40	REL208W3	40	80	56.3	42.8	22	1.5	21.4	34.9	6.8	M10 × 1.25	60.0
1 1/2	REL208-108W3	1.5000	3.1496	2.217	1.6850	0.8661	0.059	0.843	1.374	0.268	3/8-24UNF	2.362
1 9/16	REL208-109W3	1.5625										
45	REL209W3	45	85	56.3	42.8	22	1.5	21.4	34.9	6.8	M10 × 1.25	63.5
1 5/8	REL209-110W3	1.6250										
1 11/16	REL209-111W3	1.6875	3.3465	2.217	1.6850	0.8661	0.059	0.843	1.374	0.268	3/8-24UNF	2.500
1 3/4	REL209-112W3	1.7500										
50	REL210W3	50	90	62.7	49.2	22	1.5	24.6	38.1	6.8	M10 × 1.25	69.5
1 13/16	REL210-113W3	1.8125										
1 7/8	REL210-114W3	1.8750	3.5433	2.469	1.9370	0.8661	0.059	0.969	1.500	0.268	3/8-24UNF	2.736
1 15/16	REL210-115W3	1.9375										
2	REL210-200W3	2.0000										

Remarks: 1) If relubricatable type is needed, please order with suffix "D1".
2) For inch series bearings, the f_0 factor for calculating equivalent radial load is the same as the metric series.

Nominal dimensions		Basic load ratings		Factor[2)]	Mass	
mm	inch	N	lbf		kg	lb
B_5		dynamic C_r	static C_{or}	f_0		
13.5		12 800	6 650	13.2	0.22	
	0.531	2 890	1 500			0.43
13.5		14 000	7 850	13.9	0.26	
						0.59
	0.531	3 150	1 770			0.56
						0.53
						0.49
15.9		19 500	11 300	13.8	0.39	
						0.92
	0.626	4 400	2 540			0.87
						0.82
						0.78
17.5		25 700	15 300	13.8	0.59	
						1.41
	0.689	5 750	3 450			1.36
						1.31
						1.24
18.3		29 100	17 800	14.0	0.76	
	0.720	6 550	4 000			1.88
						1.80
18.3		32 500	20 400	14.1	0.78	
						2.01
	0.720	7 350	4 600			1.93
						1.84
18.3		35 000	23 200	14.4	0.96	
						2.42
	0.720	7 900	5 200			2.32
						2.21
						2.05

Ball bearings
Eccentric locking collar type

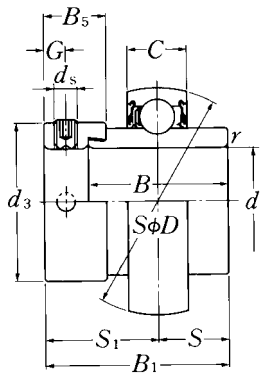

Shaft dia. mm / inch	Bearing number [1]	Nominal dimensions d	D	B1	B	C	rs min.	S	S1	G	ds	d3
		mm					mm	inch				
55	REL211W3	55	100	71.4	55.5	24	2	27.75	43.6	8	M10 × 1.25	76
2	REL211-200W3	2.0000	3.9370	2.811	2.1850	0.9449	0.079	1.093	1.717	0.315	3/8-24UNF	2.992
2 1/16	REL211-201W3	2.0625										
2 1/8	REL211-202W3	2.1250										
2 3/16	REL211-203W3	2.1875										
60	REL212W3	60	110	77.8	61.9	27	2	30.95	46.8	8	M10 × 1.25	84
2 1/4	REL212-204W3	2.2500	4.3307	3.063	2.4370	1.0630	0.079	1.219	1.843	0.315	3/8-24UNF	3.307
2 5/16	REL212-205W3	2.3125										
2 3/8	REL212-206W3	2.3750										
2 7/16	REL212-207W3	2.4375										

Remarks: 1) If relubricatable type is needed, please order with suffix "D1".
2) For inch series bearings, the f_0 factor for calculating equivalent radial load is the same as the metric series.

Nominal dimensions		Basic load ratings		Factor[2)]	Mass	
mm	inch	N	lbf		kg	lb
B_5		dynamic C_r	static C_{or}	f_0		
20.7		43 500	29 200		1.28	
						3.21
0.815		9 750	6 550	14.3	3.05	
					2.95	
						2.83
22.3		52 500	36 000		1.83	
						4.29
0.878		11 800	8 150	14.3	4.13	
					3.96	
						3.79

Ball bearings
Adapter type

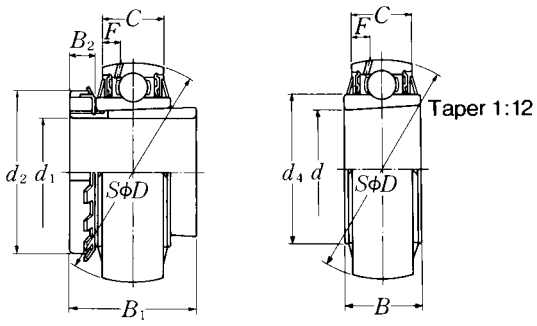

UK2···D1;H,HA, HE,HS UK2···D1

Shaft dia. mm / inch	Bearing number 1) 2)	Nominal dimensions mm / inch									
		d	D	B	C	d_4	d_1	B_1	B_2	d_2	F
20	UK205D1;H2305X	25	52	23	17	33.9	20	35	8	38	4.5
3/4	UK205D1;HE2305	0.9843	2.0472	0.9055	0.6693	1.335	3/4	1.378	0.315	1.496	0.177
25	UK206D1;H2306X	30	62	26	19	40.8	25	38	8	45	4.6
7/8	UK206D1;HS2306	1.1811	2.4409	1.0236	0.7480	1.606	7/8	1.496	0.315	1.772	0.181
1	UK206D1;HE2306X						1				
30	UK207D1;H2307X	35	72	29	20	46.8	30	43	9	52	4.6
1 1/8	UK207D1;HS2307	1.3780	2.8346	1.1417	0.7874	1.843	1 1/8	1.693	0.354	2.047	0.181
35	UK208D1;H2308X	40	80	31	21	53	35	46	10	58	4.5
1 1/4	UK208D1;HE2308X	1.5748	3.1496	1.2205	0.8268	2.087	1 1/4	1.811	0.394	2.283	0.177
1 3/8	UK208D1;HS2308X						1 3/8				
40	UK209D1;H2309X	45	85	31	22	57.5	40	50	11	65	4.9
1 7/16	UK209D1;HA2309						1 7/16				
1 1/2	UK209D1;HE2309X	1.7717	3.3465	1.2205	0.8661	2.264	1 1/2	1.969	0.433	2.559	0.193
1 5/8	UK209D1;HS2309X						1 5/8				
45	UK210D1;H2310X	50	90	32	24	62.4	45	55	12	70	5.9
1 5/8	UK210D1;HS2310						1 5/8				
1 11/16	UK210D1;HA2310	1.9685	3.5433	1.2598	0.9449	2.457	1 11/16	2.165	0.472	2.756	0.232
1 3/4	UK210D1;HE2310X						1 3/4				
50	UK211D1;H2311X	55	100	35	25	69	50	59	12	75	6.0
1 7/8	UK211D1;HS2311						1 7/8				
1 15/16	UK211D1;HA2311	2.1654	3.9370	1.3780	0.9843	2.717	1 15/16	2.323	0.472	2.953	0.236
2	UK211D1;HE2311XY						2				
55	UK212D1;H2312X	60	110	38	27	77	55	62	13	80	6.2
2 1/8	UK212D1;HS2312	2.3622	4.3307	1.4961	1.0630	3.031	2 1/8	2.441	0.512	3.150	0.244
60	UK213D1;H2313X	65	120	40	32	82.5	60	65	14	85	8.7
2 3/16	UK213D1;HA2313						2 3/16				
2 1/4	UK213D1;HE2313X	2.5591	4.7244	1.5748	1.2598	3.248	2 1/4	2.559	0.551	3.346	0.343
2 3/8	UK213D1;HS2313X						2 3/8				

Remarks: 1) Adapter number with suffix "X" means a narrow slot type adapter sleeve.
In this case the lock washer with the straight inner prong should be used.
2) For HE2311XY, screw thread pitch different from the standard is applied, because of the thin thread section of sleeve.
To distinguish it, a suffix "Y" is added.
3) For inch series bearings, the f_0 factor for calculating equivalent radial load is the same as the metric series.

Basic load ratings		Factor[3)]	Mass
N dynamic C_r	lbf static C_{or}	f_0	kg lb
14 000 3 150	7 850 1 770	13.9	0.23 0.57
19 500 4 400	11 300 2 540	13.8	0.36 0.86 0.78
25 700 5 750	15 300 3 450	13.8	0.55 1.30
29 100 6 550	17 800 4 000	14.0	0.74 1.77 1.63
32 500 7 350	20 400 4 600	14.1	0.80 2.01 1.93 1.76
35 000 7 900	23 200 5 200	14.4	0.94 2.38 2.28 2.18
43 500 9 750	29 200 6 550	14.3	1.22 2.96 2.84 2.70
52 500 11 800	36 000 8 150	14.3	1.54 3.60
57 500 12 900	40 000 9 000	14.4	2.00 4.86 4.70 4.38

Ball bearings
Adapter type

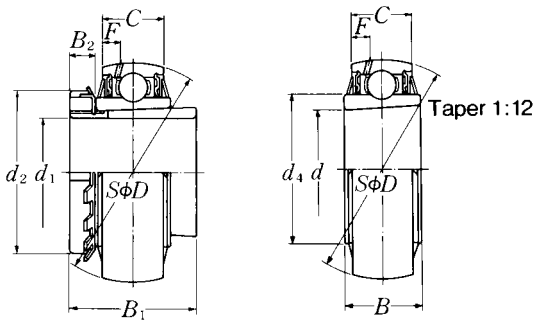

UK2···D1;H,HA, HE,HS UK2···D1

Shaft dia. mm / inch	Bearing number 1) 2)	Nominal dimensions mm / inch									
		d	D	B	C	d_4	d_1	B_1	B_2	d_2	F
65	UK215D1;H2315X	75	130	44	34	93	65	73	15	98	9.0
2 7/16	UK215D1;HA2315	2.9528	5.1181	1.7323	1.3386	3.661	2 7/16	2.874	0.591	3.858	0.354
2 1/2	UK215D1;HE2315X						2 1/2				
70	UK216D1;H2316X	80	140	45	35	98.1	70	78	17	105	9.5
2 11/16	UK216D1;HA2316	3.1496	5.5118	1.7717	1.3780	3.862	2 11/16	3.071	0.669	4.134	0.374
2 3/4	UK216D1;HE2316X						2 3/4				
75	UK217D1;H2317X	85	150	46	36	106.4	75	82	18	110	10.1
2 15/16	UK217D1;HA2317X	3.3465	5.9055	1.8110	1.4173	4.189	2 15/16	3.228	0.709	4.331	0.398
3	UK217D1;HE2317X						3				
80	UK218D1;H2318X	90	160	47	37	111.6	80	86	18	120	9.8
3 3/16	UK218D1;HA2318X	3.5433	6.2992	1.8504	1.4567	4.394	3 3/16	3.386	0.709	4.724	0.386

Remarks: 1) Adapter number with suffix "X" means a narrow slot type adapter sleeve.
In this case the lock washer with the straight inner prong should be used.
2) For HE2311XY, screw thread pitch different from the standard is applied, because of the thin thread section of sleeve.
To distinguish it, a suffix "Y" is added.
3) For inch series bearings, the f_0 factor for calculating equivalent radial load is the same as the metric series.

Basic load ratings		Factor[3)]	Mass
N dynamic C_r	lbf static C_{or}	f_0	kg lb
66 000 14 900	49 500 11 100	14.7	2.56 6.04 5.84
72 500 16 300	53 000 11 900	14.6	3.23 7.38 7.14
83 500 18 700	64 000 14 300	14.7	3.93 8.73 8.46
96 000 21 600	71 500 16 100	14.5	4.51 11.0

Ball bearings
Adapter type

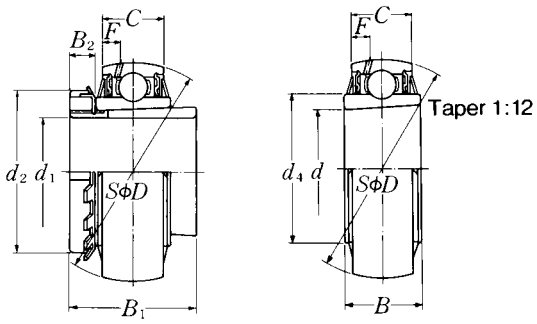

UK3···D1;H, HA, HE, HS UK3···D1

Shaft dia. mm / inch	Bearing number 1) 2)	Nominal dimensions mm / inch									
		d	D	B	C	d_4	d_1	B_1	B_2	d_2	F
20	UK305D1;H2305X	25	62	26	20	36.8	20	35	8	38	5.0
3/4	UK305D1;HE2305	0.9843	2.4409	1.0236	0.7874	1.449	3/4	1.378	0.315	1.496	0.197
25	UK306D1;H2306X	30	72	29	23	44.9	25	38	8	45	5.9
7/8	UK306D1;HS2306	1.1811	2.8346	1.1417	0.9055	1.768	7/8	1.496	0.315	1.772	0.232
1	UK306D1;HE2306X						1				
30	UK307D1;H2307X	35	80	33	25	49.4	30	43	9	52	6.8
1 1/8	UK307D1;HS2307	1.3780	3.1496	1.2992	0.9843	1.945	1 1/8	1.693	0.354	2.047	0.268
35	UK308D1;H2308X	40	90	34	27	56	35	46	10	58	7.4
1 1/4	UK308D1;HE2308X	1.5748	3.5433	1.3386	1.0630	2.205	1 1/4	1.811	0.394	2.283	0.291
1 3/8	UK308D1;HS2308X						1 3/8				
40	UK309D1;H2309X	45	100	37	29	63.5	40	50	11	65	7.4
1 7/16	UK309D1;HA2309						1 7/16				
1 1/2	UK309D1;HE2309X	1.7717	3.9370	1.4567	1.1417	2.500	1 1/2	1.969	0.433	2.559	0.291
1 5/8	UK309D1;HS2309X						1 5/8				
45	UK310D1;H2310X	50	110	41	32	70.6	45	55	12	70	8.1
1 5/8	UK310D1;HS2310						1 5/8				
1 11/16	UK310D1;HA2310	1.9685	4.3307	1.6142	1.2598	2.780	1 11/16	2.165	0.472	2.756	0.319
1 3/4	UK310D1;HE2310X						1 3/4				
50	UK311D1;H2311X	55	120	44	34	76.6	50	59	12	75	8.5
1 7/8	UK311D1;HS2311						1 7/8				
1 15/16	UK311D1;HA2311	2.1654	4.7244	1.7323	1.3386	3.016	1 15/16	2.323	0.472	2.953	0.335
2	UK311D1;HE2311XY						2				
55	UK312D1;H2312X	60	130	47	36	82.7	55	62	13	80	9.0
2 1/8	UK312D1;HS2312	2.3622	5.1181	1.8504	1.4173	3.256	2 1/8	2.441	0.512	3.150	0.354
60	UK313D1;H2313X	65	140	49	39	88.2	60	65	14	85	10.1
2 3/16	UK313D1;HA2313						2 3/16				
2 1/4	UK313D1;HE2313X	2.5591	5.5118	1.9291	1.5354	3.472	2 1/4	2.559	0.551	3.346	0.398
2 3/8	UK313D1;HS2313X						2 3/8				

Remarks: 1) Adapter number with suffix "X" means a narrow slot type adapter sleeve.
In this case the lock washer with the straight inner prong should be used.
2) For HE2311XY, screw thread pitch different from the standard is applied, because of the thin thread section of sleeve.
To distinguish it, a suffix "Y" is added.
3) For inch series bearings, the f_0 factor for calculating equivalent radial load is the same as the metric series.

Basic load ratings		Factor[3)]	Mass
N dynamic C_r	lbf static C_{or}	f_0	kg lb
21 200 4 750	10 900 2 460	12.6	0.36 0.81
26 700 6 000	15 000 3 400	13.3	0.59 1.37 1.29
33 500 7 500	19 100 4 300	13.1	0.75 1.70
40 500 9 150	24 000 5 400	13.2	1.00 2.38 2.25
53 000 11 900	32 000 7 200	13.1	1.28 3.22 3.14 2.97
62 000 13 900	38 500 8 600	13.2	1.72 3.95 3.85 3.74
71 500 16 100	45 000 10 100	13.2	2.06 4.73 4.60 4.46
82 000 18 400	52 000 11 700	13.2	2.58 5.67
92 500 20 800	60 000 13 400	13.2	3.08 7.24 7.08 6.76

Ball bearings
Adapter type

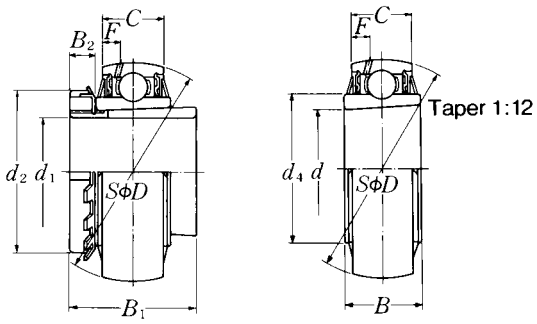

UK3···D1;H, HA, HE, HS UK3···D1

Shaft dia. mm / inch	Bearing number 1) 2)	Nominal dimensions mm / inch									
		d	D	B	C	d_4	d_1	B_1	B_2	d_2	F
65	UK315D1;H2315X	75	160	55	43	101.3	65	73	15	98	11.0
2 7/16	UK315D1;HA2315	2.9528	6.2992	2.1654	1.6929	3.988	2 7/16	2.874	0.591	3.858	0.433
2 1/2	UK315D1;HE2315X						2 1/2				
70	UK316D1;H2316X	80	170	58	45	107.9	70	78	17	105	11.4
2 11/16	UK316D1;HA2316	3.1496	6.6929	2.2835	1.7717	4.248	2 11/16	3.071	0.669	4.134	0.449
2 3/4	UK316D1;HE2316X						2 3/4				
75	UK317D1;H2317X	85	180	60	47	114.4	75	82	18	110	12.0
2 15/16	UK317D1;HA2317X	3.3465	7.0866	2.3622	1.8504	4.504	2 15/16	3.228	0.709	4.331	0.472
3	UK317D1;HE2317X						3				
80	UK318D1;H2318X	90	190	64	49	120.9	80	86	18	120	12.3
3 3/16	UK318D1;HA2318X	3.5433	7.4803	2.5197	1.9291	4.760	3 3/16	3.386	0.709	4.724	0.484
85	UK319D1;H2319X	95	200	67	51	127.5	85	90	19	125	12.8
3 1/4	UK319D1;HE2319X	3.7402	7.8740	2.6378	2.0079	5.020	3 1/4	3.543	0.748	4.921	0.504
90	UK320D1;H2320X	100	215	73	55	135.6	90	97	20	130	13.5
3 7/16	UK320D1;HA2320	3.9370	8.4646	2.8740	2.1654	5.339	3 7/16	3.819	0.787	5.118	0.531
3 1/2	UK320D1;HE2320X						3 1/2				
100	UK322D1;H2322X	110	240	80	59	151.7	100	105	21	145	13.9
110	UK324D1;H2324X	120	260	86	63	165.2	110	112	22	155	16.0
115	UK326D1;H2326	130	280	90	67	178.3	115	121	23	165	16.9
125	UK328D1;H2328	140	300	95	71	190.4	125	131	24	180	17.7

Remarks: 1) Adapter number with suffix "X" means a narrow slot type adapter sleeve.
In this case the lock washer with the straight inner prong should be used.
2) For HE2311XY, screw thread pitch different from the standard is applied, because of the thin thread section of sleeve.
To distinguish it, a suffix "Y" is added.
3) For inch series bearings, the f_0 factor for calculating equivalent radial load is the same as the metric series.

Basic load ratings		Factor[3)]	Mass
N dynamic C_r	lbf static C_{or}	f_0	kg lb
113 000 25 500	77 000 17 400	13.2	4.75 11.1 10.9
123 000 27 600	86 500 19 500	13.3	5.75 12.9 12.7
133 000 29 800	97 000 21 800	13.3	6.72 14.9 14.6
143 000 32 000	107 000 24 100	13.3	7.75 17.2
153 000 34 500	119 000 26 600	13.3	9.02 20.4
173 000 39 000	141 000 31 500	13.2	11.0 24.7 25.1
205 000	179 000	13.1	14.9
207 000	185 000	13.5	18.0
229 000	214 000	13.6	23.3
253 000	246 000	13.6	28.6

Ball bearings
Adapter type

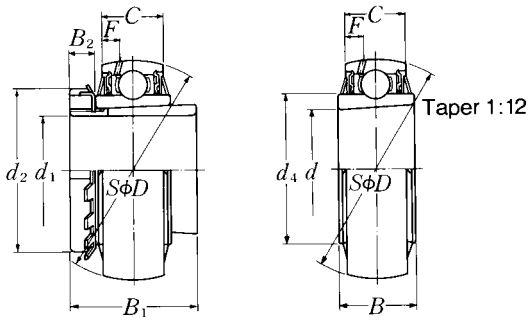

UKX···D1;H, HA, HE, HS UKX···D1

Shaft dia. mm / inch	Bearing number 1) 2)	Nominal dimensions mm / inch									
		d	D	B	C	d_4	d_1	B_1	B_2	d_2	F
20	UKX05D1;H2305X	25	62	26	19	40.8	20	35	8	38	4.6
3/4	UKX05D1;HE2305	0.9843	2.4409	1.0236	0.7480	1.606	3/4	1.378	0.315	1.496	0.181
25	UKX06D1;H2306X	30	72	29	20	46.8	25	38	8	45	4.6
7/8	UKX06D1;HS2306	1.1811	2.8346	1.1417	0.7874	1.843	7/8	1.496	0.315	1.772	0.181
1	UKX06D1;HE2306X						1				
30	UKX07D1;H2307X	35	80	31	21	53	30	43	9	52	4.5
1 1/8	UKX07D1;HS2307	1.3780	3.1496	1.2205	0.8268	2.087	1 1/8	1.693	0.354	2.047	0.177
35	UKX08D1;H2308X	40	85	31	22	57.5	35	46	10	58	4.9
1 1/4	UKX08D1;HE2308X	1.5748	3.3465	1.2205	0.8661	2.264	1 1/4	1.811	0.394	2.283	0.193
1 3/8	UKX08D1;HS2308X						1 3/8				
40	UKX09D1;H2309X	45	90	32	24	62.4	40	50	11	65	5.9
1 7/16	UKX09D1;HA2309						1 7/16				
1 1/2	UKX09D1;HE2309X	1.7717	3.5433	1.2598	0.9449	2.457	1 1/2	1.969	0.433	2.559	0.232
1 5/8	UKX09D1;HS2309X						1 5/8				
45	UKX10D1;H2310X	50	100	35	25	69	45	55	12	70	6.0
1 5/8	UKX10D1;HS2310						1 5/8				
1 11/16	UKX10D1;HA2310	1.9685	3.9370	1.3780	0.9843	2.717	1 11/16	2.165	0.472	2.756	0.236
1 3/4	UKX10D1;HE2310X						1 3/4				
50	UKX11D1;H2311X	55	110	38	27	77	50	59	12	75	6.2
1 7/8	UKX11D1;HS2311						1 7/8				
1 15/16	UKX11D1;HA2311	2.1654	4.3307	1.4961	1.0630	3.031	1 15/16	2.323	0.472	2.953	0.244
2	UKX11D1;HE2311XY						2				
55	UKX12D1;H2312X	60	120	40	32	82.5	55	62	13	80	8.7
2 1/8	UKX12D1;HS2312	2.3622	4.7244	1.5748	1.2598	3.248	2 1/8	2.441	0.512	3.150	0.343
60	UKX13D1;H2313X	65	125	42	33	87	60	65	14	85	8.8
2 3/16	UKX13D1;HA2313						2 3/16				
2 1/4	UKX13D1;HE2313X	2.5591	4.9213	1.6535	1.2992	3.425	2 1/4	2.559	0.551	3.346	0.346
2 3/8	UKX13D1;HS2313X						2 3/8				

Remarks: 1) Adapter number with suffix "X" means a narrow slot type adapter sleeve.
In this case the lock washer with the straight inner prong should be used.
2) For HE2311XY, screw thread pitch different from the standard is applied, because of the thin thread section of sleeve.
To distinguish it, a suffix "Y" is added.
3) For inch series bearings, the f_0 factor for calculating equivalent radial load is the same as the metric series.

Basic load ratings		Factor[3)]	Mass
N dynamic C_r	lbf static C_{or}	f_0	kg lb
19 500 4 400	11 300 2 540	13.8	0.38 0.85
25 700 5 750	15 300 3 450	13.8	0.53 1.24 1.16
29 100 6 550	17 800 4 000	14.0	0.75 1.70
32 500 7 350	20 400 4 600	14.1	0.85 2.01 1.88
35 000 7 900	23 200 5 200	14.4	0.97 2.32 2.24 2.07
43 500 9 750	29 200 6 550	14.3	1.26 3.09 2.99 2.88
52 500 11 800	36 000 8 150	14.3	1.62 3.84 3.72 3.58
57 500 12 900	40 000 9 000	14.4	2.07 4.66
62 000 14 000	44 000 9 900	14.5	2.19 5.28 5.12 4.79

Ball bearings
Adapter type

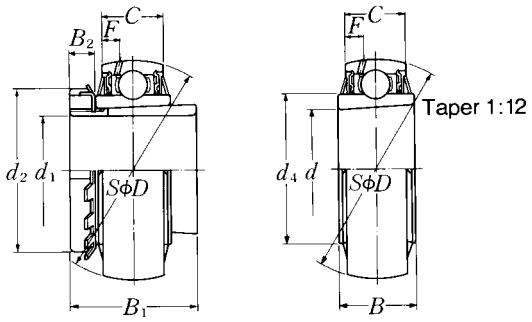

UKX···D1;H, HA, HE, HS UKX···D1

Shaft dia. mm / inch	Bearing number 1) 2)	Nominal dimensions mm / inch									
		d	D	B	C	d_4	d_1	B_1	B_2	d_2	F
65	UKX15D1;H2315X	75	140	45	35	98.1	65	73	15	98	9.5
2 7/16	UKX15D1;HA2315	2.9528	5.5118	1.7717	1.3780	3.862	2 7/16	2.874	0.591	3.858	0.374
2 1/2	UKX15D1;HE2315X						2 1/2				
70	UKX16D1;H2316X	80	150	46	36	106.4	70	78	17	105	10.1
2 11/16	UKX16D1;HA2316	3.1496	5.9055	1.8110	1.4173	4.189	2 11/16	3.071	0.669	4.134	0.398
2 3/4	UKX16D1;HE2316X						2 3/4				
75	UKX17D1;H2317X	85	160	47	37	111.6	75	82	18	110	9.8
2 15/16	UKX17D1;HA2317X	3.3465	6.2992	1.8504	1.4567	4.394	2 15/16	3.228	0.709	4.331	0.386
3	UKX17D1;HE2317X						3				
80	UKX18D1;H2318X	90	170	49	39	118.2	80	86	18	120	10.5
3 3/16	UKX18D1;HA2318X	3.5433	6.6929	1.9291	1.5354	4.654	3 3/16	3.386	0.709	4.724	0.413
90	UKX20D1;H2320X	100	190	57	44	131.3	90	97	20	130	11.3

Remarks: 1) Adapter number with suffix "X" means a narrow slot type adapter sleeve.
In this case the lock washer with the straight inner prong should be used.
2) For HE2311XY, screw thread pitch different from the standard is applied, because of the thin thread section of sleeve.
To distinguish it, a suffix "Y" is added.
3) For inch series bearings, the f_0 factor for calculating equivalent radial load is the same as the metric series.

Basic load ratings		Factor[3)]	Mass
N	lbf		kg lb
dynamic C_r	static C_{or}	f_0	
72 500	53 000	14.6	3.25
16 300	11 900		7.47
			7.27
83 500	64 000	14.7	3.87
18 700	14 300		8.79
			8.56
96 000	71 500	14.5	4.53
21 600	16 100		10.6
			10.3
109 000	82 000	14.4	5.17
24 500	18 400		11.2
133 000	105 000	14.4	7.39

Ball bearings
Set screw type

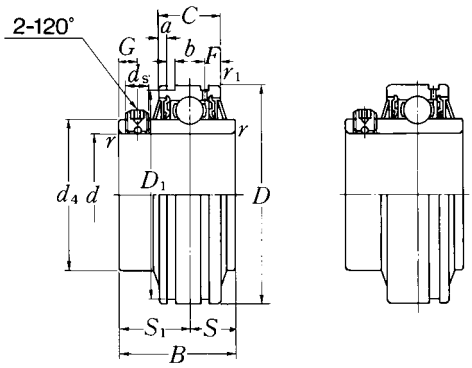

UCS···D1N UCS···D1

Shaft dia. mm / inch	Bearing number [1]	Nominal dimensions d	D	B	C	mm r_s min. / inch r_{1s} min.	S	S_1	G	ds
12	UCS201LD1N	12	47	31	17	0.6	0.6	12.7	18.3	4.5	M5 × 0.8
1/2	UCS201-008LD1N	0.5000	1.8504	1.2205	0.6693	0.024	0.024	0.500	0.720	0.177	No.10-32UNF
15	UCS202LD1N	15	47	31	17	0.6	0.6	12.7	18.3	4.5	M5 × 0.8
9/16	UCS202-009LD1N	0.5625	1.8504	1.2205	0.6693	0.024	0.024	0.500	0.720	0.177	No.10-32UNF
5/8	UCS202-010LD1N	0.6250									
17	UCS203LD1N	17	47	31	17	0.6	0.6	12.7	18.3	4.5	M5 × 0.8
11/16	UCS203-011LD1N	0.6875	1.8504	1.2205	0.6693	0.024	0.024	0.500	0.720	0.177	No.10-32UNF
20	UCS204LD1N	20	47	31	17	1	0.6	12.7	18.3	4.5	M5 × 0.8
3/4	UCS204-012LD1N	0.7500	1.8504	1.2205	0.6693	0.039	0.024	0.500	0.720	0.177	No.10-32UNF
25	UCS205LD1N	25	52	34.1	17	1	0.6	14.3	19.8	5	M5 × 0.8
13/16	UCS205-013LD1N	0.8125	2.0472	1.3425	0.6693	0.039	0.024	0.563	0.780	0.197	No.10-32UNF
7/8	UCS205-014LD1N	0.8750									
15/16	UCS205-015LD1N	0.9375									
1	UCS205-100LD1N	1.0000									
30	UCS206LD1N	30	62	38.1	19	1	1	15.9	22.2	5	M6 × 0.75
1 1/16	UCS206-101LD1N	1.0625	2.4409	1.5000	0.7480	0.039	0.039	0.626	0.874	0.197	1/4-28UNF
1 1/8	UCS206-102LD1N	1.1250									
1 3/16	UCS206-103LD1N	1.1875									
1 1/4	UCS206-104LD1N	1.2500									
35	UCS207LD1N	35	72	42.9	20	1.5	1.5	17.5	25.4	6	M6 × 0.75
1 1/4	UCS207-104LD1N	1.2500	2.8346	1.6890	0.7874	0.059	0.059	0.689	1.000	0.236	1/4-28UNF
1 5/16	UCS207-105LD1N	1.3125									
1 3/8	UCS207-106LD1N	1.3750									
1 7/16	UCS207-107LD1N	1.4375									
40	UCS208LD1N	40	80	49.2	21	1.5	1.5	19	30.2	8	M8 × 1
1 1/2	UCS208-108LD1N	1.5000	3.1496	1.9370	0.8268	0.059	0.059	0.748	1.189	0.315	5/16-24UNF
1 9/16	UCS208-109LD1N	1.5625									
45	UCS209LD1N	45	85	49.2	22	1.5	1.5	19	30.2	8	M8 × 1
1 5/8	UCS209-110LD1N	1.6250									
1 11/16	UCS209-111LD1N	1.6875	3.3465	1.9370	0.8661	0.059	0.059	0.748	1.189	0.315	5/16-24UNF
1 3/4	UCS209-112LD1N	1.7500									

Remarks: 1) These numbers indicate relubricatable type. If maintenance free type is needed, please order without suffix "D1".
2) For inch series bearings, the f_0 factor for calculating equivalent radial load is the same as the metric series.

Nominal dimensions					Basic load ratings		Factor[2)]	Mass
mm / inch					N / lbf			kg / lb
d_4	D_1	a	b	F	dynamic C_r	static C_{or}	f_0	
29.6	44.6	3.1	1.5	4	12 800	6 650	13.2	0.21
1.1654	1.756	0.122	0.059	0.157	2 890	1 500		0.46
29.6	44.6	3.1	1.5	4	12 800	6 650	13.2	0.20
1.1654	1.756	0.122	0.059	0.157	2 890	1 500		0.44 0.42
29.6	44.6	3.1	1.5	4	12 800	6 650	13.2	0.18
1.1654	1.756	0.122	0.059	0.157	2 890	1 500		0.39
29.6	44.6	3.1	1.5	4	12 800	6 650	13.2	0.17
1.1654	1.756	0.122	0.059	0.157	2 890	1 500		0.39
33.9	49.73	3.2	1.5	4.1	14 000	7 850	13.9	0.20
1.3346	1.958	0.126	0.059	0.161	3 150	1 770		0.53 0.51 0.46 0.44
40.8	59.61	3.2	2.05	4.2	19 500	11 300	13.8	0.34
1.6063	2.374	0.126	0.081	0.165	4 400	2 540		0.82 0.77 0.73 0.66
46.8	68.81	3.3	2.05	5	25 700	15 300	13.8	0.48
1.8425	2.709	0.130	0.081	0.197	5 750	3 450		1.21 1.15 1.08 1.01
53	76.81	3.4	2.05	5	29 100	17 800	14.0	0.64
2.0866	3.024	0.134	0.081	0.197	6 550	4 000		1.52 1.46
57.5	81.81	3.5	2.05	5.1	32 500	20 400	14.1	0.70
2.2638	3.221	0.138	0.081	0.201	7 350	4 600		1.76 1.68 1.57

Ball bearings
Set screw type

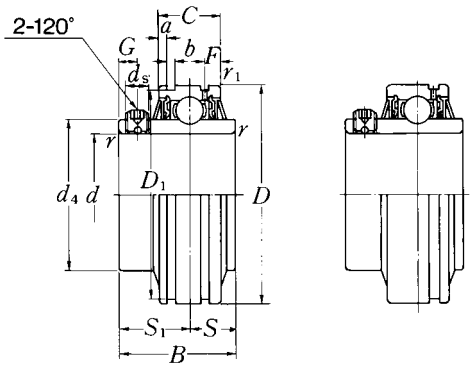

UCS···D1N UCS···D1

Shaft dia. mm / inch	Bearing number [1]	Nominal dimensions d	D	B	C	mm r_s min.	inch r_{1s} min.	S	S_1	G	ds
50	UCS210LD1N	50	90	51.6	24	1.5	1.5	19	32.6	9	M8 × 1
1 13/16	UCS210-113LD1N	1.8125									
1 7/8	UCS210-114LD1N	1.8750	3.5433	2.0315	0.9449	0.059	0.059	0.748	1.283	0.354	5/16-24UNF
1 15/16	UCS210-115LD1N	1.9375									
2	UCS210-200LD1N	2.0000									
55	UCS211LD1N	55	100	55.6	25	2	2	22.2	33.4	9	M8 × 1
2	UCS211-200LD1N	2.0000									
2 1/16	UCS211-201LD1N	2.0625	3.9370	2.1890	0.9843	0.079	0.079	0.874	1.315	0.354	5/16-24UNF
2 1/8	UCS211-202LD1N	2.1250									
2 3/16	UCS211-203LD1N	2.1875									
60	UCS212LD1N	60	110	65.1	27	2	2	25.4	39.7	10	M10 × 1.25
2 1/4	UCS212-204LD1N	2.2500									
2 5/16	UCS212-205LD1N	2.3125	4.3307	2.5630	1.0630	0.079	0.079	1.000	1.563	0.394	3/8-24UNF
2 3/8	UCS212-206LD1N	2.3750									
2 7/16	UCS212-207LD1N	2.4375									
65	UCS213D1	65	120	65.1	32	2	2	25.4	39.7	10	M10 × 1.25
2 1/2	UCS213-208D1	2.5000	4.7244	2.5630	1.2598	0.079	0.079	1.000	1.563	0.394	3/8-24UNF
2 9/16	UCS213-209D1	2.5625									
70	UCS214D1	70	125	74.6	33	2	2	30.2	44.4	12	M10 × 1.25
75	UCS215D1	75	130	77.8	34	2	2	33.3	44.5	12	M10 × 1.25
80	UCS216D1	80	140	82.6	35	2.5	2.5	33.3	49.3	12	M10 × 1.25
85	UCS217D1	85	150	85.7	36	2.5	2.5	34.1	51.6	12	M12 × 1.5
90	UCS218D1	90	160	96	37	2.5	2.5	39.7	56.3	12	M12 × 1.5

Remarks: 1) These numbers indicate relubricatable type. If maintenance free type is needed, please order without suffix "D1".
2) For inch series bearings, the f_0 factor for calculating equivalent radial load is the same as the metric series.

Nominal dimensions					Basic load ratings		Factor[2)]	Mass
mm / inch					N / lbf			kg / lb
d_4	D_1	a	b	F	dynamic C_r	static C_{or}	f_0	
62.4	86.79	3.7	2.85	5.6	35 000	23 200	14.4	0.78
2.4567	3.417	0.146	0.112	0.220	7 900	5 200		2.03 1.92 1.81 1.69
69	96.80	4.4	2.85	5.9	43 500	29 200	14.3	1.06
2.7165	3.811	0.173	0.112	0.232	9 750	6 550		2.71 2.60 2.46 2.34
77	106.81	4.4	2.85	6	52 500	36 000	14.3	1.48
3.0315	4.205	0.173	0.112	0.236	11 800	8 150		3.78 3.62 3.45 3.29
82.5	—	—	—	6.8	57 500	40 000	14.4	1.88
3.2480	—	—	—	0.268	12 900	9 000		4.41 4.24
87	—	—	—	7	62 000	44 000	14.5	2.17
93	—	—	—	7	66 000	49 500	14.7	2.43
98.1	—	—	—	7.5	72 500	53 000	14.6	2.89
106.4	—	—	—	7.5	83 500	64 000	14.7	3.47
111.6	—	—	—	7	96 000	71 500	14.5	4.24

Ball bearings
Set screw type

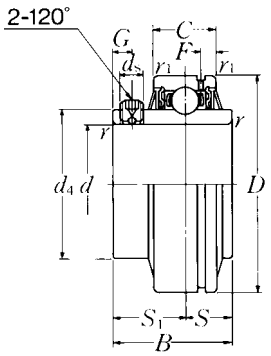

Shaft dia. mm / inch	Bearing number [1]	Nominal dimensions d	D	B	C	mm r_s min.	inch r_{1s} min.	S	S_1	G	ds
25	UCS305D1	25	62	38	20	1.5	0.6	15	23	6	M6 × 0.75
13/16	UCS305-013D1	0.8125									
7/8	UCS305-014D1	0.8750	2.4409	1.4961	0.7874	0.059	0.024	0.591	0.906	0.236	1/4-28UNF
15/16	UCS305-015D1	0.9375									
1	UCS305-100D1	1.0000									
30	UCS306D1	30	72	43	23	1.5	1	17	26	6	M6 × 0.75
1 1/16	UCS306-101D1	1.0625									
1 1/8	UCS306-102D1	1.1250	2.8346	1.6929	0.9055	0.059	0.039	0.669	1.024	0.236	1/4-28UNF
1 3/16	UCS306-103D1	1.1875									
35	UCS307D1	35	80	48	25	2	1	19	29	8	M8 × 1
1 1/4	UCS307-104D1	1.2500									
1 5/16	UCS307-105D1	1.3125	3.1496	1.8898	0.9843	0.079	0.039	0.748	1.142	0.315	5/16-24UNF
1 3/8	UCS307-106D1	1.3750									
1 7/16	UCS307-107D1	1.4375									
40	UCS308D1	40	90	52	27	2	1	19	33	10	M10 × 1.25
1 1/2	UCS308-108D1	1.5000	3.5433	2.0472	1.0630	0.079	0.039	0.748	1.299	0.394	3/8-24UNF
1 9/16	UCS308-109D1	1.5625									
45	UCS309D1	45	100	57	29	2	1	22	35	10	M10 × 1.25
1 5/8	UCS309-110D1	1.6250									
1 11/16	UCS309-111D1	1.6875	3.9370	2.2441	1.1417	0.079	0.039	0.866	1.378	0.394	3/8-24UNF
1 3/4	UCS309-112D1	1.7500									
50	UCS310D1	50	110	61	32	2.5	1.5	22	39	12	M12 × 1.5
1 13/16	UCS310-113D1	1.8125									
1 7/8	UCS310-114D1	1.8750	4.3307	2.4016	1.2598	0.098	0.059	0.866	1.535	0.472	1/2-20UNF
1 15/16	UCS310-115D1	1.9375									
55	UCS311D1	55	120	66	34	2.5	1.5	25	41	12	M12 × 1.5
2	UCS311-200D1	2.0000									
2 1/16	UCS311-201D1	2.0625	4.7244	2.5984	1.3386	0.098	0.059	0.984	1.614	0.472	1/2-20UNF
2 1/8	UCS311-202D1	2.1250									
2 3/16	UCS311-203D1	2.1875									

Remarks: 1) These numbers indicate relubricatable type. If maintenance free type is needed, please order without suffix "D1".
2) For inch series bearings, the f_0 factor for calculating equivalent radial load is the same as the metric series.

Nominal dimensions		Basic load ratings		Factor[2)]	Mass
mm	inch	N	lbf		kg lb
		dynamic	static		
B_5	F	C_r	C_{or}	f_0	
36.8	4.3	21 200	10 900	12.6	0.37
1.4488	0.169	4 750	2 460		0.94
					0.90
					0.83
					0.81
44.9	5.1	26 700	15 000	13.3	0.58
1.7677	0.201	6 000	3 400		1.39
					1.33
					1.28
49.4	5.3	33 500	19 100	13.1	0.74
1.9449	0.209	7 500	4 300		1.77
					1.70
					1.64
					1.57
56	5.6	40 500	24 000	13.2	1.00
2.2047	0.220	9 150	5 400		2.32
					2.23
63.5	5.8	53 000	32 000	13.1	1.33
2.5000	0.228	11 900	7 200		3.17
					3.09
					2.98
70.6	6.3	62 000	38 500	13.2	1.72
2.7795	0.248	13 900	8 600		4.10
					3.99
					3.85
76.6	6.5	71 500	45 000	13.2	2.15
3.0157	0.256	16 100	10 100		5.14
					4.99
					4.85
					4.68

Ball bearings
Set screw type

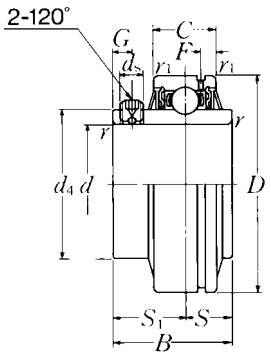

Shaft dia. mm / inch	Bearing number [1]	Nominal dimensions d	D	B	C	mm r_s min.	inch r_{1s} min.	S	S_1	G	ds
60	UCS312D1	60	130	71	36	2.5	1.5	26	45	12	M12 × 1.5
2 1/4	UCS312-204D1	2.2500									
2 5/16	UCS312-205D1	2.3125	5.1181	2.7953	1.4173	0.098	0.059	1.024	1.772	0.472	1/2-20UNF
2 3/8	UCS312-206D1	2.3750									
2 7/16	UCS312-207D1	2.4375									
65	UCS313D1	65	140	75	39	2.5	2	30	45	12	M12 × 1.5
2 1/2	UCS313-208D1	2.5000	5.5118	2.9528	1.5354	0.098	0.079	1.181	1.772	0.472	1/2-20UNF
2 9/16	UCS313-209D1	2.5625									
70	UCS314D1	70	150	78	41	2.5	2	33	45	12	M12 × 1.5
2 5/8	UCS314-210D1	2.6250									
2 11/16	UCS314-211D1	2.6875	5.9055	3.0709	1.6142	0.098	0.079	1.299	1.772	0.472	1/2-20UNF
2 3/4	UCS314-212D1	2.7500									
75	UCS315D1	75	160	82	43	2.5	2	32	50	14	M14 × 1.5
2 13/16	UCS315-213D1	2.8125									
2 7/8	UCS315-214D1	2.8750	6.2992	3.2283	1.6929	0.098	0.079	1.260	1.969	0.551	9/16-18UNF
2 15/16	UCS315-215D1	2.9375									
3	UCS315-300D1	3.0000									
80	UCS316D1	80	170	86	45	2.5	2	34	52	14	M14 × 1.5
3 1/16	UCS316-301D1	3.0625									
3 1/8	UCS316-302D1	3.1250	6.6929	3.3858	1.7717	0.098	0.079	1.339	2.047	0.551	9/16-18UNF
3 3/16	UCS316-303D1	3.1875									
85	UCS317D1	85	180	96	47	3	2.5	40	56	16	M16 × 1.5
3 1/4	UCS317-304D1	3.2500									
3 5/16	UCS317-305D1	3.3125	7.0866	3.7795	1.8504	0.118	0.098	1.575	2.205	0.630	5/8-18UNF
3 7/16	UCS317-307D1	3.4375									
90	UCS318D1	90	190	96	49	3	2.5	40	56	16	M16 × 1.5
3 7/16	UCS318-307D1	3.4375	7.4803	3.7795	1.9291	0.118	0.098	1.575	2.205	0.630	5/8-18UNF
3 1/2	UCS318-308D1	3.5000									

Remarks: 1) These numbers indicate relubricatable type. If maintenance free type is needed, please order without suffix "D1".
2) For inch series bearings, the f_0 factor for calculating equivalent radial load is the same as the metric series.

Nominal dimensions		Basic load ratings		Factor[2)]	Mass
mm	inch	N	lbf		kg lb
		dynamic	static		
B_5	F	C_r	C_{or}	f_0	
82.7	6.7	82 000	52 000	13.2	2.70
					6.27
3.2559	0.264	18 400	11 700		6.10
					5.89
					5.72
88.2	7.5	92 500	60 000	13.2	3.37
3.4724	0.295	20 800	13 400		7.63
					7.41
94.8	7.5	104 000	68 000	13.2	4.03
					9.37
3.7323	0.295	23 400	15 300		9.13
					8.91
101.3	7.7	113 000	77 000	13.2	4.88
					11.4
3.9882	0.303	25 500	17 400		11.1
					10.9
					10.6
107.9	7.8	123 000	86 500	13.3	5.74
					13.0
4.2480	0.307	27 600	19 500		12.7
					12.5
114.4	8.2	133 000	97 000	13.3	6.88
					15.7
4.5039	0.323	29 800	21 800		15.4
					14.7
120.9	8.5	143 000	107 000	13.3	7.80
4.7598	0.335	32 000	24 100		17.8
					17.4

Ball bearings
Set screw type

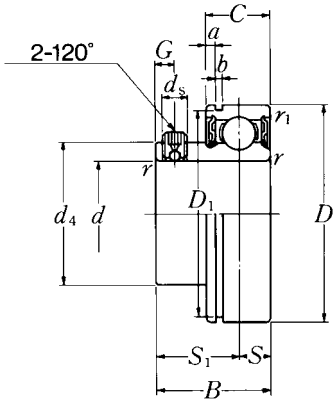

Shaft dia. mm / inch	Bearing number[1)]	Nominal dimensions d	D	B	C	r_s min.	r_{1s} min.	S	S_1	G	ds	d_4
		mm				mm		inch				
12	ASS201N	12	40	22	12	0.6	0.6	6	16	4.2	M5 × 0.8	24.3
1/2	ASS201-008N	0.5000	1.5748	0.8661	0.4724	0.024	0.024	0.236	0.630	0.165	No.10-32UNF	0.957
15	ASS202N	15	40	22	12	0.6	0.6	6	16	4.2	M5 × 0.8	24.3
9/16	ASS202-009N	0.5625	1.5748	0.8661	0.4724	0.024	0.024	0.236	0.630	0.165	No.10-32UNF	0.957
5/8	ASS202-010N	0.6250										
17	ASS203N	17	40	22	12	0.6	0.6	6	16	4.2	M5 × 0.8	24.3
11/16	ASS203-011N	0.6875	1.5748	0.8661	0.4724	0.024	0.024	0.236	0.630	0.165	No.10-32UNF	0.957
20	ASS204N	20	47	25	14	1	0.6	7	18	4.2	M5 × 0.8	29.6
3/4	ASS204-012N	0.7500	1.8504	0.9843	0.5512	0.039	0.024	0.276	0.709	0.165	No.10-32UNF	1.165
25	ASS205N	25	52	27	15	1	0.6	7.5	19.5	5	M5 × 0.8	33.9
13/16	ASS205-013N	0.8125										
7/8	ASS205-014N	0.8750	2.0472	1.0630	0.5906	0.039	0.024	0.295	0.768	0.197	No.10-32UNF	1.335
15/16	ASS205-015N	0.9375										
1	ASS205-100N	1.0000										
30	ASS206N	30	62	29	16	1	0.6	8	21	5	M6 × 0.75	40.8
1 1/16	ASS206-101N	1.0625										
1 1/8	ASS206-102N	1.1250	2.4409	1.1417	0.6299	0.039	0.024	0.315	0.827	0.197	1/4-28UNF	1.606
1 3/16	ASS206-103N	1.1875										
1 1/4	ASS206-104N	1.2500										
35	ASS207N	35	72	34	17	1.5	0.6	8.5	25.5	6	M6 × 0.75	46.8
1 1/4	ASS207-104N	1.2500										
1 5/16	ASS207-105N	1.3125	2.8346	1.3386	0.6693	0.059	0.024	0.335	1.004	0.236	1/4-28UNF	1.843
1 3/8	ASS207-106N	1.3750										
1 7/16	ASS207-107N	1.4375										
40	ASS208N	40	80	38	18	1.5	0.6	9	29	8	M8 × 1	53
1 1/2	ASS208-108N	1.5000	3.1496	1.4961	0.7087	0.059	0.024	0.354	1.142	0.315	5/16-24UNF	2.087
1 9/16	ASS208-109N	1.5625										

Remarks: 1) If relubricatable type is needed, please order with suffix "D1".
2) For inch series bearings, the f_0 factor for calculating equivalent radial load is the same as the metric series.

Nominal dimensions			Basic load ratings		Factor [2]	Mass
mm / inch			N / lbf			kg / lb
D_1	a	b	dynamic C_r	static C_{or}	f_0	
38.1	1.98	1.5	9 600	4 600	12.8	0.12
1.500	0.078	0.059	2 160	1 030		0.24
38.1	1.98	1.5	9 600	4 600	12.8	0.11
1.500	0.078	0.059	2 160	1 030		0.23
						0.22
38.1	1.98	1.5	9 600	4 600	12.8	0.10
1.500	0.078	0.059	2 160	1 030		0.20
44.6	2.38	1.5	12 800	6 650	13.2	0.17
1.756	0.094	0.059	2 890	1 500		0.33
49.73	2.38	1.5	14 000	7 850	13.9	0.17
						0.46
1.958	0.094	0.059	3 150	1 770		0.44
						0.42
						0.39
59.61	3.18	2.05	19 500	11 300	13.8	0.31
						0.67
2.347	0.125	0.081	4 400	2 540		0.65
						0.63
						0.61
68.81	3.18	2.05	25 700	15 300	13.8	0.49
						1.18
2.709	0.125	0.081	5 750	3 450		1.05
						0.93
						0.81
76.81	3.18	2.05	29 100	17 800	14.0	0.50
3.024	0.125	0.081	6 550	4 000		1.15
						1.06

Ball bearings
Set screw type

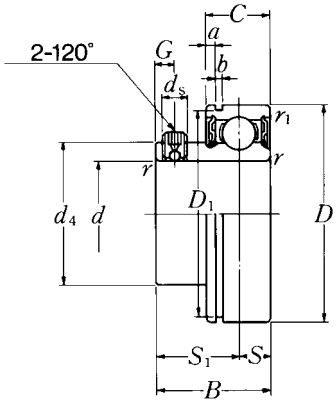

Shaft dia. mm / inch	Bearing number[1)]	Nominal dimensions										
		mm						inch				
		d	D	B	C	r_s min.	r_{1s} min.	S	S_1	G	ds	d_4
45	**ASS209N**	45	85	40	19	1.5	1.5	9.5	30.5	8	M8 × 1	57.5
1 5/8	**ASS209-110N**	1.6250										
1 11/16	**ASS209-111N**	1.6875	3.3465	1.5748	0.7480	0.059	0.059	0.374	1.201	0.315	5/16-24UNF	2.264
1 3/4	**ASS209-112N**	1.7500										
50	**ASS210N**	50	90	42	20	1.5	1.5	10	32	9	M8 × 1	62.4
1 13/16	**ASS210-113N**	1.8125										
1 7/8	**ASS210-114N**	1.8750	3.5433	1.6535	0.7874	0.059	0.059	0.394	1.260	0.354	5/16-24UNF	2.457
1 15/16	**ASS210-115N**	1.9375										
2	**ASS210-200N**	2.0000										

Remarks: 1) If relubricatable type is needed, please order with suffix "D1".
2) For inch series bearings, the f_0 factor for calculating equivalent radial load is the same as the metric series.

Nominal dimensions			Basic load ratings		Factor [2]	Mass
mm / inch			N / lbf			kg / lb
D_1	a	b	dynamic C_r	static C_{or}	f_0	
81.81	3.18	2.05	32 500	20 400	14.1	0.56
3.221	0.125	0.081	7 350	4 600		1.41 1.34 1.26
86.79	3.18	2.85	35 000	23 200	14.4	0.67
3.417	0.125	0.112	7 900	5 200		1.70 1.61 1.52 1.43

Ball bearings
Eccentric locking collar type

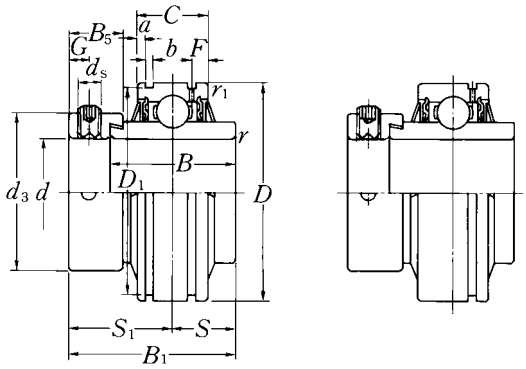

UELS···D1 UELS···D1

Shaft dia. mm / inch	Bearing number [1]	Nominal dimensions d	D	B1	B	C	rs min.	r1s min.	S	S1	G
		mm / inch									
20	**UELS204LD1NW3**	20	47	43.7	34.2	17	1	0.6	17.1	26.6	4.8
3/4	**UELS204-012LD1NW3**	0.7500	1.8504	1.720	1.3465	0.6693	0.039	0.024	0.673	1.047	0.189
25	**UELS205LD1NW3**	25	52	44.4	34.9	17	1	0.6	17.45	26.9	4.8
13/16	**UELS205-013LD1NW3**	0.8125									
7/8	**UELS205-014LD1NW3**	0.8750	2.0472	1.748	1.3740	0.6693	0.039	0.024	0.687	1.059	0.189
15/16	**UELS205-015LD1NW3**	0.9375									
1	**UELS205-100LD1NW3**	1.0000									
30	**UELS206LD1NW3**	30	62	48.4	36.5	19	1	1	18.25	30.1	6
1 1/16	**UELS206-101LD1NW3**	1.0625									
1 1/8	**UELS206-102LD1NW3**	1.1250	2.4409	1.906	1.4370	0.7480	0.039	0.039	0.719	1.185	0.236
1 3/16	**UELS206-103LD1NW3**	1.1875									
1 1/4	**UELS206-104LD1NW3**	1.2500									
35	**UELS207LD1NW3**	35	72	51.1	37.6	20	1.5	1.5	18.8	32.3	6.8
1 1/4	**UELS207-104LD1NW3**	1.2500									
1 5/16	**UELS207-105LD1NW3**	1.3125	2.8346	2.012	1.4803	0.7874	0.059	0.059	0.740	1.272	0.268
1 3/8	**UELS207-106LD1NW3**	1.3750									
1 7/16	**UELS207-107LD1NW3**	1.4375									
40	**UELS208LD1NW3**	40	80	56.3	42.8	21	1.5	1.5	21.4	34.9	6.8
1 1/2	**UELS208-108LD1NW3**	1.5000	3.1496	2.217	1.6850	0.8268	0.059	0.059	0.843	1.374	0.268
1 9/16	**UELS208-109LD1NW3**	1.5625									
45	**UELS209LD1NW3**	45	85	56.3	42.8	22	1.5	1.5	21.4	34.9	6.8
1 5/8	**UELS209-110LD1NW3**	1.6250									
1 11/16	**UELS209-111LD1NW3**	1.6875	3.3465	2.217	1.6850	0.8661	0.059	0.059	0.843	1.374	0.268
1 3/4	**UELS209-112LD1NW3**	1.7500									
50	**UELS210LD1NW3**	50	90	62.7	49.2	24	1.5	1.5	24.6	38.1	6.8
1 13/16	**UELS210-113LD1NW3**	1.8125									
1 7/8	**UELS210-114LD1NW3**	1.8750	3.5433	2.469	1.9370	0.9449	0.059	0.059	0.969	1.500	0.268
1 15/16	**UELS210-115LD1NW3**	1.9375									
2	**UELS210-200LD1NW3**	2.0000									

Remarks: 1) These numbers indicate relubricatable type. If maintenance free type is needed, please order without suffix "D1".
2) For inch series bearings, the f_0 factor for calculating equivalent radial load is the same as the metric series.

Nominal dimensions							Basic load ratings		Factor[2)]	Mass
		mm	inch				N	lbf		kg lb
d_S	d_3	B_5	D_1	a	b	F	dynamic C_r	static C_{or}	f_0	
M6 × 0.75	33	13.5	44.6	3.1	1.5	4	12 800	6 650	13.2	0.23
1/4-28UNF	1.299	0.531	1.756	0.122	0.059	0.157	2 890	1 500		0.45
M6 × 0.75	38	13.5	49.73	3.2	1.5	4.1	14 000	7 850	13.9	0.27
										0.61
1/4-28UNF	1.496	0.531	1.958	0.126	0.059	0.161	3 150	1 770		0.58
										0.55
										0.51
M8 × 1	44.5	15.9	59.61	3.2	2.05	4.2	19 500	11 300	13.8	0.41
										0.94
5/16-24UNF	1.752	0.626	2.347	0.126	0.081	0.165	4 400	2 540		0.89
										0.84
										0.80
M10 × 1.25	55.5	17.5	68.81	3.3	2.05	5	25 700	15 300	13.8	0.60
										1.45
3/8-24UNF	2.185	0.689	2.709	0.130	0.081	0.197	5 750	3 450		1.40
										1.35
										1.28
M10 × 1.25	60	18.3	76.81	3.4	2.05	5	29 100	17 800	14.0	0.79
3/8-24UNF	2.362	0.720	3.024	0.134	0.081	0.197	6 550	4 000		1.90
										1.82
M10 × 1.25	63.5	18.3	81.81	3.5	2.05	5.1	32 500	20 400	14.1	0.85
										2.05
3/8-24UNF	2.500	0.720	3.221	0.138	0.081	0.201	7 350	4 600		1.97
										1.88
M10 × 1.25	69.5	18.3	86.79	3.7	2.85	5.6	35 000	23 200	14.4	0.98
										2.46
3/8-24UNF	2.736	0.720	3.417	0.146	0.112	0.220	7 900	5 200		2.36
										2.25
										2.09

Ball bearings
Eccentric locking collar type

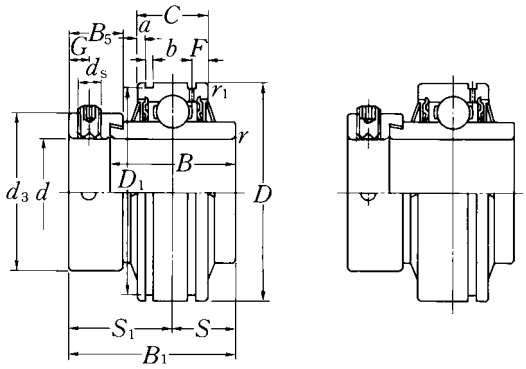

UELS···D1N UELS···D1

Shaft dia. mm / inch	Bearing number [1]	Nominal dimensions d	D	B1	B	C	rs min.	r1s min.	S	S1	G
		mm									
55	UELS211LD1NW3	55	100	71.4	55.5	25	2	2	27.75	43.6	8
2	UELS211-200LD1NW3	2.0000									
2 1/16	UELS211-201LD1NW3	2.0625	3.9370	2.811	2.1850	0.9843	0.079	0.079	1.093	1.717	0.315
2 1/8	UELS211-202LD1NW3	2.1250									
2 3/16	UELS211-203LD1NW3	2.1875									
60	UELS212LD1NW3	60	110	77.8	61.9	27	2	2	30.95	46.8	8
2 1/4	UELS212-204LD1NW3	2.2500									
2 5/16	UELS212-205LD1NW3	2.3125	4.3307	3.063	2.4370	1.0630	0.079	0.079	1.219	1.843	0.315
2 3/8	UELS212-206LD1NW3	2.3750									
2 7/16	UELS212-207LD1NW3	2.4375									

Remarks: 1) These numbers indicate relubricatable type. If maintenance free type is needed, please order without suffix "D1".
2) For inch series bearings, the f_0 factor for calculating equivalent radial load is the same as the metric series.

Nominal dimensions							Basic load ratings		Factor[2)]	Mass
		mm	inch				N	lbf		kg lb
d_S	d_3	B_5	D_1	a	b	F	dynamic C_r	static C_{or}	f_0	
M10 × 1.25	76	20.7	96.80	4.4	2.85	5.9	43 500	29 200	14.3	1.32 3.28
3/8-24UNF	2.992	0.815	3.811	0.173	0.112	0.232	9 750	6 550		3.12 3.02 2.90
M10 × 1.25	84	22.3	106.81	4.4	2.85	6	52 500	36 000	14.3	1.93 4.50
3/8-24UNF	3.307	0.878	4.205	0.173	0.112	0.236	11 800	8 150		4.34 4.17 4.00

Ball bearings
Eccentric locking collar type

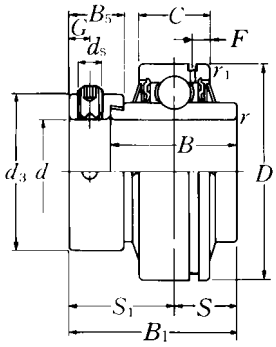

Shaft dia. mm / inch	Bearing number [1]	Nominal dimensions d	D	B_1	B	C	r_s min.	r_{1s} min.	S	S_1	G	ds
		mm					mm	inch				
25	UELS305D1W3	25	62	46.8	34.9	20	1.5	0.6	16.7	30.1	6	M8 × 1
13/16	UELS305-013D1W3	0.8125										
7/8	UELS305-014D1W3	0.8750	2.4409	1.843	1.3740	0.7874	0.059	0.024	0.657	1.185	0.236	5/16-24UNF
15/16	UELS305-015D1W3	0.9375										
1	UELS305-100D1W3	1.0000										
30	UELS306D1W3	30	72	50	36.5	23	1.5	1	17.5	32.5	6.7	M8 × 1
1 1/16	UELS306-101D1W3	1.0625										
1 1/8	UELS306-102D1W3	1.1250	2.8346	1.969	1.4370	0.9055	0.059	0.039	0.689	1.280	0.264	5/16-24UNF
1 3/16	UELS306-103D1W3	1.1875										
35	UELS307D1W3	35	80	51.6	38.1	25	2	1	18.3	33.3	6.7	M8 × 1
1 1/4	UELS307-104D1W3	1.2500										
1 5/16	UELS307-105D1W3	1.3125	3.1496	2.031	1.5000	0.9843	0.079	0.039	0.720	1.311	0.264	5/16-24UNF
1 3/8	UELS307-106D1W3	1.3750										
1 7/16	UELS307-107D1W3	1.4375										
40	UELS308D1W3	40	90	57.1	41.3	27	2	1	19.8	37.3	8	M10 × 1.25
1 1/2	UELS308-108D1W3	1.5000	3.5433	2.248	1.6260	1.0630	0.079	0.039	0.780	1.469	0.315	3/8-24UNF
1 9/16	UELS308-109D1W3	1.5625										
45	UELS309D1W3	45	100	58.7	42.9	29	2	1	19.8	38.9	8	M10 × 1.25
1 5/8	UELS309-110D1W3	1.6250										
1 11/16	UELS309-111D1W3	1.6875	3.9370	2.311	1.6890	1.1417	0.079	0.039	0.780	1.531	0.315	3/8-24UNF
1 3/4	UELS309-112D1W3	1.7500										
50	UELS310D1W3	50	110	66.6	49.2	32	2.5	1.5	24.6	42	8.7	M10 × 1.25
1 13/16	UELS310-113D1W3	1.8125										
1 7/8	UELS310-114D1W3	1.8750	4.3307	2.622	1.9370	1.2598	0.098	0.059	0.969	1.654	0.343	3/8-24UNF
1 15/16	UELS310-115D1W3	1.9375										
55	UELS311D1W3	55	120	73	55.6	34	2.5	1.5	27.8	45.2	8.7	M10 × 1.25
2	UELS311-200D1W3	2.0000										
2 1/16	UELS311-201D1W3	2.0625	4.7244	2.874	2.1890	1.3386	0.098	0.059	1.094	1.780	0.343	3/8-24UNF
2 1/8	UELS311-202D1W3	2.1250										
2 3/16	UELS311-203D1W3	2.1875										

Remarks: 1) These numbers indicate relubricatable type. If maintenance free type is needed, please order without suffix "D1".
2) For inch series bearings, the f_0 factor for calculating equivalent radial load is the same as the metric series.

Nominal dimensions			Basic load ratings		Factor[2)]	Mass
mm / inch			N / lbf			kg / lb
d_3	B_5	F	dynamic C_r	static C_{or}	f_0	
42.8	15.9	4.3	21 200	10 900	12.6	0.45
1.685	0.626	0.169	4 750	2 460		1.13
						1.09
						1.05
						1.00
50	17.5	5.1	26 700	15 000	13.3	0.71
1.969	0.689	0.201	6 000	3 400		1.62
						1.56
						1.50
55	17.5	5.3	33 500	19 100	13.1	0.83
2.165	0.689	0.209	7 500	4 300		1.99
						1.91
						1.84
						1.76
63.5	20.6	5.6	40 500	24 000	13.2	1.12
2.500	0.811	0.220	9 150	5 400		2.67
						2.58
70	20.6	5.8	53 000	32 000	13.1	1.50
2.756	0.811	0.228	11 900	7 200		3.26
						3.37
						3.26
76.2	22.2	6.3	62 000	38 500	13.2	1.93
3.000	0.874	0.248	13 900	8 600		4.55
						4.44
						4.30
83	22.2	6.5	71 500	45 000	13.2	2.42
3.268	0.874	0.256	16 100	10 100		5.76
						5.57
						5.43
						5.26

Ball bearings
Eccentric locking collar type

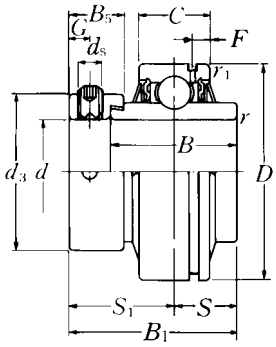

Shaft dia. mm / inch	Bearing number [1]	Nominal dimensions d	D	B_1	B	C	r_s min.	r_{1s} min.	S	S_1	G	ds
		mm										
60	UELS312D1W3	60	130	79.4	61.9	36	2.5	1.5	30.95	48.45	8.7	M10 × 1.25
2 1/4	UELS312-204D1W3	2.2500										
2 5/16	UELS312-205D1W3	2.3125	5.1181	3.126	2.4370	1.4173	0.098	0.059	1.219	1.907	0.343	3/8-24UNF
2 3/8	UELS312-206D1W3	2.3750										
2 7/16	UELS312-207D1W3	2.4375										
65	UELS313D1W3	65	140	85.7	65.1	39	2.5	2	32.55	53.15	10.3	M12 × 1.5
2 1/2	UELS313-208D1W3	2.5000	5.5118	3.374	2.5630	1.5354	0.098	0.079	1.281	2.093	0.406	1/2-20UNF
2 9/16	UELS313-209D1W3	2.5625										
70	UELS314D1W3	70	150	92.1	68.3	41	2.5	2	34.15	57.95	10.3	M12 × 1.5
2 5/8	UELS314-210D1W3	2.6250										
2 11/16	UELS314-211D1W3	2.6875	5.9055	3.626	2.6890	1.6142	0.098	0.079	1.344	2.281	0.406	1/2-20UNF
2 3/4	UELS314-212D1W3	2.7500										
75	UELS315D1W3	75	160	100	74.6	43	2.5	2	37.3	62.7	12.7	M16 × 1.5
2 13/16	UELS315-213D1W3	2.8125										
2 7/8	UELS315-214D1W3	2.8750	6.2992	3.937	2.9370	1.6929	0.098	0.079	1.469	2.469	0.500	5/8-18UNF
2 15/16	UELS315-215D1W3	2.9375										
3	UELS315-300D1W3	3.0000										
80	UELS316D1W3	80	170	106.4	81	45	2.5	2	40.5	65.9	12.7	M16 × 1.5
3 1/16	UELS316-301D1W3	3.0625										
3 1/8	UELS316-302D1W3	3.1250	6.6929	4.189	3.1890	1.7717	0.098	0.079	1.594	2.594	0.500	5/8-18UNF
3 3/16	UELS316-303D1W3	3.1875										
85	UELS317D1W3	85	180	109.5	84.1	47	3	2.5	42.05	67.45	12.7	M16 × 1.5
3 1/4	UELS317-304D1W3	3.2500										
3 5/16	UELS317-305D1W3	3.3125	7.0866	4.311	3.3110	1.8504	0.118	0.098	1.656	2.656	0.500	5/8-18UNF
3 7/16	UELS317-307D1W3	3.4375										
90	UELS318D1W3	90	190	115.9	87.3	49	3	2.5	43.65	72.25	14.3	M20 × 1.5
3 7/16	UELS318-307D1W3	3.4375	7.4803	4.563	3.4370	1.9291	0.118	0.098	1.719	2.844	0.563	3/4-16UNF
3 1/2	UELS318-308D1W3	3.5000										

Remarks: 1) These numbers indicate relubricatable type. If maintenance free type is needed, please order without suffix "D1".
2) For inch series bearings, the f_0 factor for calculating equivalent radial load is the same as the metric series.

Nominal dimensions			Basic load ratings		Factor[2)]	Mass
mm / inch			N / lbf			kg / lb
d_3	B_5	F	dynamic C_r	static C_{or}	f_0	
89	23.9	6.7	82 000	52 000	13.2	3.04
3.504	0.941	0.264	18 400	11 700		7.01 6.86 6.69 6.40
97	27	7.5	92 500	60 000	13.2	3.79
3.819	1.063	0.295	20 800	13 400		8.76 8.55
102	30.2	7.5	104 000	68 000	13.2	4.54
4.016	1.189	0.295	23 400	15 300		10.7 10.5 10.2
113	31.8	7.7	113 000	77 000	13.2	5.50
4.449	1.252	0.303	25 500	17 400		13.5 13.2 13.0 12.9
119	31.8	7.8	123 000	86 500	13.3	6.89
4.685	1.252	0.307	27 600	19 500		15.3 15.0 15.3
127	31.8	8.2	133 000	97 000	13.3	8.21
5.000	1.252	0.323	29 800	21 800		18.2 17.9 17.2
133	36.5	8.5	143 000	107 000	13.3	9.34
5.236	1.437	0.335	32 000	24 100		21.2 20.7

Ball bearings
Eccentric locking collar type

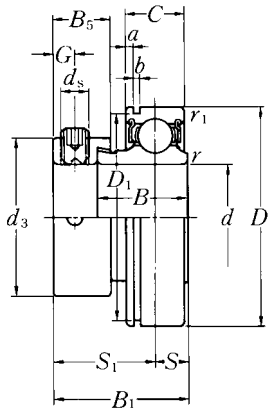

Shaft dia. mm / inch	Bearing number 1)	Nominal dimensions mm / inch d	D	B1	B	C	rs min.	r1s min.	S	S1	G	ds
12	AELS201NW3	12	40	28.6	19	12	0.6	0.6	6.5	22.1	4.8	M6 × 0.75
1/2	AELS201-008NW3	0.5000	1.5748	1.126	0.7480	0.4724	0.024	0.024	0.256	0.870	0.189	1/4-28UNF
15	AELS202NW3	15	40	28.6	19	12	0.6	0.6	6.5	22.1	4.8	M6 × 0.75
9/16	AELS202-009NW3	0.5625	1.5748	1.126	0.7480	0.4724	0.024	0.024	0.256	0.870	0.189	1/4-28UNF
5/8	AELS202-010NW3	0.6250										
17	AELS203NW3	17	40	28.6	19	12	0.6	0.6	6.5	22.1	4.8	M6 × 0.75
11/16	AELS203-011NW3	0.6875	1.5748	1.126	0.7480	0.4724	0.024	0.024	0.256	0.870	0.189	1/4-28UNF
20	AELS204NW3	20	47	31	21.5	14	1	0.6	7.5	23.5	4.8	M6 × 0.75
3/4	AELS204-012NW3	0.7500	1.8504	1.220	0.8465	0.5512	0.039	0.024	0.295	0.925	0.189	1/4-28UNF
25	AELS205NW3	25	52	31	21.5	15	1	0.6	7.5	23.5	4.8	M6 × 0.75
13/16	AELS205-013NW3	0.8125	2.0472	1.220	0.8465	0.5906	0.039	0.024	0.295	0.925	0.189	1/4-28UNF
7/8	AELS205-014NW3	0.8750										
15/16	AELS205-015NW3	0.9375										
1	AELS205-100NW3	1.0000										
30	AELS206NW3	30	62	35.7	23.8	16	1	0.6	9	26.7	6	M8 × 1
1 1/16	AELS206-101NW3	1.0625	2.4409	1.406	0.9370	0.6299	0.039	0.024	0.354	1.051	0.236	5/16-24UNF
1 1/8	AELS206-102NW3	1.1250										
1 3/16	AELS206-103NW3	1.1875										
1 1/4	AELS206-104NW3	1.2500										
35	AELS207NW3	35	72	38.9	25.4	17	1.5	0.6	9.5	29.4	6.8	M10 × 1.25
1 1/4	AELS207-104NW3	1.2500	2.8346	1.531	1.0000	0.6693	0.059	0.024	0.374	1.157	0.268	3/8-24UNF
1 5/16	AELS207-105NW3	1.3125										
1 4/8	AELS207-106NW3	1.3750										
1 7/16	AELS207-107NW3	1.4375										
40	AELS208NW3	40	80	43.7	30.2	18	1.5	0.6	11	32.7	6.8	M10 × 1.25
1 1/2	AELS208-108NW3	1.5000	3.1496	1.720	1.1890	0.7087	0.059	0.024	0.433	1.287	0.268	3/8-24UNF
1 9/16	AELS208-109NW3	1.5625										
45	AELS209NW3	45	85	43.7	30.2	19	1.5	1.5	11	32.7	6.8	M10 × 1.25
1 5/8	AELS209-110NW3	1.6250										
1 11/16	AELS209-111NW3	1.6875	3.3465	1.720	1.1890	0.7480	0.059	0.059	0.433	1.287	0.268	3/8-24UNF
1 3/4	AELS209-112NW3	1.7500										

Remarks: 1) If relubricatable type is needed, please order with suffix "D1".
2) For inch series bearings, the f_0 factor for calculating equivalent radial load is the same as the metric series.

Nominal dimensions					Basic load ratings		Factor[2)]	Mass
mm / inch					N / lbf			kg / lb
d_3	D_1	a	b	B_5	dynamic C_r	static C_{or}	f_0	
29	38.1	1.98	1.5	13.6	9 600	4 600	12.8	0.12
1.142	1.500	0.078	0.059	0.535	2 160	1 030		0.26
29	38.1	1.98	1.5	13.6	9 600	4 600	12.8	0.11
1.142	1.500	0.078	0.059	0.535	2 160	1 030		0.26
								0.24
29	38.1	1.98	1.5	13.6	9 600	4 600	12.8	0.10
1.142	1.500	0.078	0.059	0.535	2 160	1 030		0.23
33	44.6	2.38	1.5	13.5	12 800	6 650	13.2	0.17
1.299	1.756	0.094	0.059	0.531	2 890	1 500		0.35
38	49.73	2.38	1.5	13.5	14 000	7 850	13.9	0.20
								0.51
1.496	1.958	0.094	0.059	0.531	3 150	1 770		0.48
								0.45
								0.42
44.5	59.61	3.18	2.05	15.9	19 500	11 300	13.8	0.31
								0.74
1.752	2.347	0.125	0.081	0.626	4 400	2 540		0.73
								0.66
								0.61
55.5	68.81	3.18	2.05	17.5	25 700	15 300	13.8	0.49
								1.15
2.185	2.709	0.125	0.081	0.689	5 750	3 450		1.10
								1.04
								0.98
60	76.81	3.18	2.05	18.3	29 100	17 800	14.0	0.66
2.362	3.024	0.125	0.081	0.720	6 550	4 000		1.41
								1.34
63.5	81.81	3.18	2.05	18.3	32 500	20 400	14.1	0.73
								1.81
2.500	3.221	0.125	0.081	0.720	7 350	4 600		1.72
								1.63

Ball bearings
Eccentric locking collar type

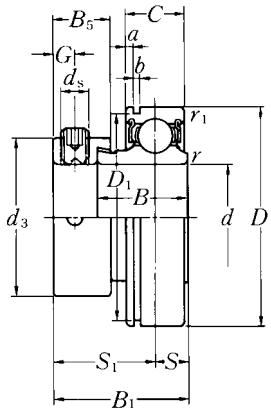

Shaft dia. mm / inch	Bearing number 1)	Nominal dimensions d	D	B1	B	C (mm)	rs min. (mm)	r1s min. (mm)	S (mm)	S1 (mm)	G (mm)	ds (mm)
50	**AELS210NW3**	50	90	43.7	30.2	20	1.5	1.5	11	32.7	6.8	M10 × 1.25
1 13/16	**AELS210-113NW3**	1.8125										
1 7/8	**AELS210-114NW3**	1.8750	3.5433	1.720	1.1890	0.7874	0.059	0.059	0.433	1.287	0.268	3/8-24UNF
1 15/16	**AELS210-115NW3**	1.9375										
2	**AELS210-200NW3**	2.0000										
55	**AELS211NW3**	55	100	48.4	32.5	21	2	1.5	12	36.4	8	M10 × 1.25
2	**AELS211-200NW3**	2.0000										
2 1/16	**AELS211-201NW3**	2.0625	3.9370	1.906	1.2795	0.8268	0.079	0.059	0.472	1.433	0.315	3/8-24UNF
2 1/8	**AELS211-202NW3**	2.1250										
2 3/16	**AELS211-203NW3**	2.1875										
60	**AELS212NW3**	60	110	53.1	37.2	22	2	1.5	13.5	39.6	8	M10 × 1.25
2 1/4	**AELS212-204NW3**	2.2500										
2 5/16	**AELS212-205NW3**	2.3125	4.3307	2.091	1.4646	0.8661	0.079	0.059	0.531	1.559	0.315	3/8-24UNF
2 3/8	**AELS212-206NW3**	2.3750										
2 7/16	**AELS212-207NW3**	2.4375										

Remarks: 1) If relubricatable type is needed, please order with suffix "D1".
2) For inch series bearings, the f_0 factor for calculating equivalent radial load is the same as the metric series.

Nominal dimensions					Basic load ratings		Factor[2)]	Mass
mm / inch					N / lbf			kg / lb
d_3	D_1	a	b	B_5	dynamic C_r	static C_{or}	f_0	
69.5	86.79	3.18	2.85	18.3	35 000	23 200	14.4	0.74
2.736	3.417	0.125	0.112	0.720	7 900	5 200		1.85 / 1.76 / 1.68 / 1.59
76	96.8	3.18	2.85	20.7	43 500	29 200	14.3	1.00
2.992	3.811	0.125	0.112	0.815	9 750	6 550		2.49 / 2.38 / 2.27 / 2.16
84	106.81	3.18	2.85	22.3	52 500	36 000	14.3	1.33
3.307	4.205	0.125	0.112	0.878	11 800	8 150		3.17 / 3.04 / 2.91 / 2.78

Ball bearings
Eccentric locking collar type

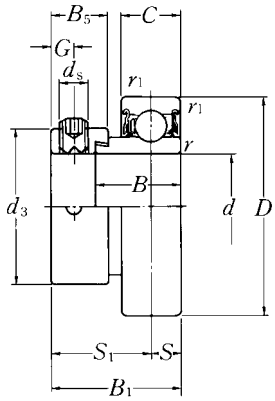

Shaft dia. mm / inch	Bearing number 1)	Nominal dimensions d	D	B1	B	C	rs min.	r1s min.	S	S1	G	ds
		mm										
		inch										
12	JELS201W3	12	40	28.6	19	13	0.6	0.4	6.5	22.1	4.8	M6 × 0.75
1/2	JELS201-008W3	0.5000	1.5748	1.126	0.7480	0.5118	0.024	0.016	0.256	0.870	0.189	1/4-28UNF
15	JELS202W3	15	40	28.6	19	13	0.6	0.4	6.5	22.1	4.8	M6 × 0.75
9/16	JELS202-009W3	0.5625	1.5748	1.126	0.7480	0.5118	0.024	0.016	0.256	0.870	0.189	1/4-28UNF
5/8	JELS202-010W3	0.6250										
17	JELS203W3	17	40	28.6	19	13	0.6	0.4	6.5	22.1	4.8	M6 × 0.75
11/16	JELS203-011W3	0.6875	1.5748	1.126	0.7480	0.5118	0.024	0.016	0.256	0.870	0.189	1/4-28UNF
20	JELS204W3	20	47	31	21.5	15	1	0.6	7.5	23.5	4.8	M6 × 0.75
3/4	JELS204-012W3	0.7500	1.8504	1.220	0.8465	0.5906	0.039	0.024	0.295	0.925	0.189	1/4-28UNF
25	JELS205W3	25	52	31	21.5	15	1	0.6	7.5	23.5	4.8	M6 × 0.75
13/16	JELS205-013W3	0.8125	2.0472	1.220	0.8465	0.5906	0.039	0.024	0.295	0.925	0.189	1/4-28UNF
7/8	JELS205-014W3	0.8750										
15/16	JELS205-015W3	0.9375										
1	JELS205-100W3	1.0000										
30	JELS206W3	30	62	35.7	23.8	18	1	1	9	26.7	6	M8 × 1
1 1/16	JELS206-101W3	1.0625	2.4409	1.406	0.9370	0.7087	0.039	0.039	0.354	1.051	0.236	5/16-24UNF
1 1/8	JELS206-102W3	1.1250										
1 3/16	JELS206-103W3	1.1875										
1 1/4	JELS206-104W3	1.2500										
35	JELS207W3	35	72	38.9	25.4	19	1.5	1.5	9.5	29.4	6.8	M10 × 1.25
1 1/4	JELS207-104W3	1.2500	2.8346	1.531	1.0000	0.7480	0.059	0.059	0.374	1.157	0.268	3/8-24UNF
1 5/16	JELS207-105W3	1.3125										
1 3/8	JELS207-106W3	1.3750										
1 7/16	JELS207-107W3	1.4375										
40	JELS208W3	40	80	43.7	30.2	22	1.5	1.5	11	32.7	6.8	M10 × 1.25
1 1/2	JELS208-108W3	1.5000	3.1496	1.720	1.1890	0.8661	0.059	0.059	0.433	1.287	0.268	3/8-24UNF
1 9/16	JELS208-109W3	1.5625										
45	JELS209W3	45	85	43.7	30.2	22	1.5	1.5	11	32.7	6.8	M10 × 1.25
1 5/8	JELS209-110W3	1.6250										
1 11/16	JELS209-111W3	1.6875	3.3465	1.720	1.1890	0.8661	0.059	0.059	0.433	1.287	0.268	3/8-24UNF
1 3/4	JELS209-112W3	1.7500										

Remarks: 1) If relubricatable type is needed, please order with suffix "D1".
2) For inch series bearings, the f_0 factor for calculating equivalent radial load is the same as the metric series.

Nominal dimensions		Basic load ratings		Factor[2)]	Mass
mm	inch	N	lbf		kg lb
d_3	B_5	dynamic C_r	static C_{or}	f_0	
29	13.6	9 600	4 600	12.8	0.13
1.142	0.535	2 160	1 030		0.28
29	13.6	9 600	4 600	12.8	0.13
1.142	0.535	2 160	1 030		0.26
					0.24
29	13.6	9 600	4 600	12.8	0.10
1.142	0.535	2 160	1 030		0.22
33	13.5	12 800	6 650	13.2	0.18
1.299	0.531	2 890	1 500		0.42
38	13.5	14 000	7 850	13.9	0.20
					0.54
1.496	0.531	3 150	1 770		0.51
					0.48
					0.44
44.5	15.9	19 500	11 300	13.8	0.34
					0.84
1.752	0.626	4 400	2 540		0.79
					0.75
					0.70
55.5	17.5	25 700	15 300	13.8	0.53
					1.29
2.185	0.689	5 750	3 450		1.24
					1.18
					1.12
60	18.3	29 100	17 800	14.0	0.71
2.362	0.720	6 550	4 000		1.64
					1.57
63.5	18.3	32 500	20 400	14.1	0.79
					1.92
2.500	0.720	7 350	4 600		1.85
					1.76

Ball bearings
Eccentric locking collar type

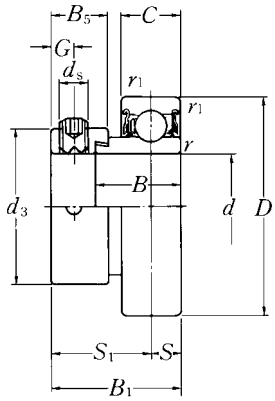

Shaft dia. mm / inch	Bearing number 1)	Nominal dimensions d	D	B1	B	C (mm)	rs min. (mm)	r1s min. (mm)	S	S1	G	ds
50	JELS210W3	50	90	43.7	30.2	22	1.5	1.5	11	32.7	6.8	M10 × 1.25
1 13/16	JELS210-113W3	1.8125										
1 7/8	JELS210-114W3	1.8750	3.5433	1.720	1.1890	0.8661	0.059	0.059	0.433	1.287	0.268	3/8-24UNF
1 15/16	JELS210-115W3	1.9375										
2	JELS210-200W3	2.0000										
55	JELS211W3	55	100	48.4	32.5	24	2	2	12	36.4	8	M10 × 1.25
2	JELS211-200W3	2.0000										
2 1/16	JELS211-201W3	2.0625	3.9370	1.906	1.2795	0.9449	0.079	0.079	0.472	1.433	0.315	3/8-24UNF
2 1/8	JELS211-202W3	2.1250										
2 3/16	JELS211-203W3	2.1875										
60	JELS212W3	60	110	53.1	37.2	27	2	2	13.5	39.6	8	M10 × 1.25
2 1/4	JELS212-204W3	2.2500										
2 5/16	JELS212-205W3	2.3125	4.3307	2.091	1.4646	1.0630	0.079	0.079	0.531	1.559	0.315	3/8-24UNF
2 3/8	JELS212-206W3	2.3750										
2 7/16	JELS212-207W3	2.4375										

Remarks: 1) If relubricatable type is needed, please order with suffix "D1".
2) For inch series bearings, the f_0 factor for calculating equivalent radial load is the same as the metric series.

Nominal dimensions		Basic load ratings		Factor[2)]	Mass
mm	inch	N	lbf		kg lb
d_3	B_5	dynamic C_r	static C_{or}	f_0	
69.5	18.3	35 000	23 200	14.4	0.87
					2.14
2.736	0.720	7 900	5 200		2.05
					1.96
					1.85
76	20.7	43 500	29 200	14.3	1.16
					2.84
2.992	0.815	9 750	6 550		2.73
					2.62
					2.51
84	22.3	52 500	36 000	14.3	1.52
					3.59
3.307	0.878	11 800	8 150		3.46
					3.33
					3.17

Ball bearings
Tight fit type

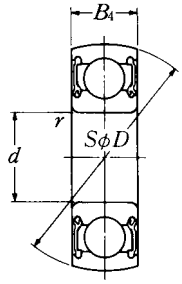

Shaft dia. mm	Bearing number	Nominal dimensions d	mm D	inch B_4	r_s min.	Basic load ratings N dynamic C_r	lbf static C_{or}	Factor f_0	Mass kg	lb
10	CS200LLU	10 0.3937	30 1.1811	9 0.354	0.6 0.024	5 100 1 150	2 390 540	13.2	0.03 0.07	
12	CS201LLU	12 0.4724	32 1.2598	10 0.394	0.6 0.024	6 100 1 370	2 750 615	12.7	0.04 0.09	
15	CS202LLU	15 0.5906	35 1.3780	11 0.433	0.6 0.024	7 750 1 740	3 600 805	12.7	0.04 0.09	
17	CS203LLU	17 0.6693	40 1.5748	12 0.472	0.6 0.024	9 600 2 160	4 600 1 030	12.8	0.06 0.13	
20	CS204LLU	20 0.7874	47 1.8504	14 0.551	1 0.039	12 800 2 890	6 650 1 500	13.2	0.10 0.22	
25	CS205LLU	25 0.9843	52 2.0472	15 0.591	1 0.039	14 000 3 150	7 850 1 770	13.9	0.13 0.29	
30	CS206LLU	30 1.1811	62 2.4409	16 0.630	1 0.039	19 500 4 400	11 300 2 540	13.8	0.20 0.44	
35	CS207LLU	35 1.3780	72 2.8346	17 0.669	1.5 0.059	25 700 5 750	15 300 3 450	13.8	0.29 0.64	
40	CS208LLU	40 1.5748	80 3.1496	18 0.709	1.5 0.059	29 100 6 550	17 800 4 000	14.0	0.37 0.82	
45	CS209LLU	45 1.7717	85 3.3465	19 0.748	1.5 0.059	32 500 7 350	20 400 4 600	14.1	0.39 0.86	
50	CS210LLU	50 1.9685	90 3.5433	20 0.787	1.5 0.059	35 000 7 900	23 200 5 200	14.4	0.46 1.01	
55	CS211LLU	55 2.1654	100 3.9370	21 0.827	2 0.079	43 500 9 750	29 200 6 550	14.3	0.58 1.28	
60	CS212LLU	60 2.3622	110 4.3307	22 0.866	2 0.079	52 500 11 800	36 000 8 150	14.3	0.76 1.68	

Note: Symbols
Δd_{mp}: Mean bore diameter deviation
ΔB_s: Inner ring width deviation
ΔC_s: Outer ring width deviation

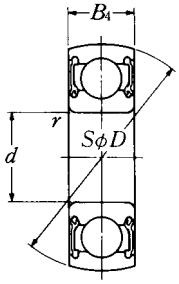

Shaft dia. mm	Bearing number	Nominal dimensions d mm	D mm	B_4 inch	r_s min. mm	Basic load ratings dynamic C_r N	static C_{or} lbf	Factor f_0	Mass kg	lb
25	CS305LLU	25 0.9843	62 2.4409	17 0.669	1.5 0.059	21 200 4 750	10 900 2 460	12.6	0.22 0.49	
30	CS306LLU	30 1.1811	72 2.8346	19 0.748	1.5 0.059	26 700 6 000	15 000 3 400	13.3	0.34 0.75	
35	CS307LLU	35 1.3780	80 3.1496	21 0.827	2 0.079	33 500 7 500	19 100 4 300	13.1	0.44 0.97	
40	CS308LLU	40 1.5748	90 3.5433	23 0.906	2 0.079	40 500 9 150	24 000 5 400	13.2	0.62 1.37	
45	CS309LLU	45 1.7717	100 3.9370	25 0.984	2 0.079	53 000 11 900	32 000 7 200	13.1	0.79 1.74	
50	CS310LLU	50 1.9685	110 4.3307	27 1.063	2.5 0.098	62 000 13 900	38 500 8 600	13.2	1.06 2.34	

Note: Symbols
Δd_{mp}: Mean bore diameter deviation
ΔB_s: Inner ring width deviation
ΔC_s: Outer ring width deviation

Ball bearing, square bore, spherical O.D.

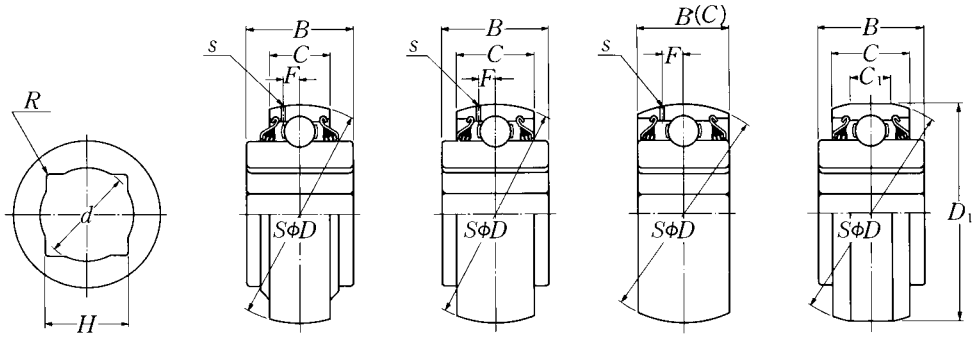

Type 1 Type 2 Type 3 Type 4

Shaft size inch	Bearing [1] number	Type	Nominal dimensions									
			H	d max.	R [2] max.	D mm	D inch	C mm	C inch	B mm	B inch
7/8	1AS08-7/8	1	22.987 ± 0.127	24.4	2.25	80	0 / − 0.013	18	0 / − 0.12	36.5	0 / − 0.12
			0.9050 ± 0.0050	0.961	0.089	3.1496	0 / − 0.0005	0.7087	0 / − 0.0047	1.4370	0 / − 0.0047
7/8	4AS08-7/8	4	22.987 ± 0.127	24.4	2.25	87.338	0 / − 0.025	30.2	0 / − 0.12	36.5	0 / − 0.12
			0.9050 ± 0.0050	0.961	0.089	3.4385	0 / − 0.0010	1.1890	0 / − 0.0047	1.4370	0 / − 0.0047
1	1AS08-1	1	26.162 ± 0.127	27.8	2.25	80	0 / − 0.013	18	0 / − 0.12	36.5	0 / − 0.12
			1.0300 ± 0.0050	1.095	0.089	3.1496	0 / − 0.0005	0.7087	0 / − 0.0047	1.4370	0 / − 0.0047
1	2AS08-1D1	2	26.162 ± 0.127	27.8	2.25	80	0 / − 0.013	30.2	0 / − 0.12	36.5	0 / − 0.12
			1.0300 ± 0.0050	1.095	0.089	3.1496	0 / − 0.0005	1.1890	0 / − 0.0047	1.4370	0 / − 0.0047
1	4AS08-1	4	26.162 ± 0.127	27.8	2.25	87.338	0 / − 0.025	30.2	0 / − 0.12	36.5	0 / − 0.12
			1.0300 ± 0.0050	1.095	0.089	3.4385	0 / − 0.0010	1.1890	0 / − 0.0047	1.4370	0 / − 0.0047
1 1/8	1AS08-1. 1/8	1	29.972 ± 0.127	31.4	2.25	80	0 / − 0.013	18	0 / − 0.12	36.5	0 / − 0.12
			1.1800 ± 0.0050	1.236	0.089	3.1496	0 / − 0.0005	0.7087	0 / − 0.0047	1.4370	0 / − 0.0047
1 1/8	2AS08-1. 1/8D1	2	29.972 ± 0.127	31.4	2.25	80	0 / − 0.013	30.2	0 / − 0.12	36.5	0 / − 0.12
			1.1800 ± 0.0050	1.236	0.089	3.1496	0 / − 0.0005	1.1890	0 / − 0.0047	1.4370	0 / − 0.0047

Remarks: 1) Bearings suffixed with D1 have oil holes on the outer ring.
2) R min.: 0.059 inch except 3AS14-2D1 R min.: 0.126 inch.

Nominal dimensions					Basic load ratings		Factor	Mass	
mm / inch					N / lbf			kg	lb
D_1		C_1	s	F	dynamic C_r	static C_{or}	f_0		
—		—	—	—	29 100	17 800	14.0	0.73	
—		—	—	—	6 550	4 000		1.61	
85.750	0 / − 0.025	16.6	—	—	29 100	17 800	14.0	0.93	
3.3760	0 / − 0.0010	0.6535	—	—	6 550	4 000		2.05	
—		—	—	—	29 100	17 800	14.0	0.68	
—		—	—	—	6 550	4 000		1.50	
—		—	2.2	6.6	29 100	17 800	14.0	0.76	
—		—	0.087	0.260	6 550	4 000		1.68	
85.750	0 / − 0.025	16.6	—	—	29 100	17 800	14.0	0.89	
3.3760	0 / − 0.0010	0.6535	—	—	6 550	4 000		1.96	
—		—	—	—	29 100	17 800	14.0	0.60	
—		—	—	—	6 550	4 000		1.32	
—		—	2.2	6.6	29 100	17 800	14.0	0.70	
—		—	0.087	0.260	6 550	4 000		1.54	

Ball bearing, square bore, spherical O.D.

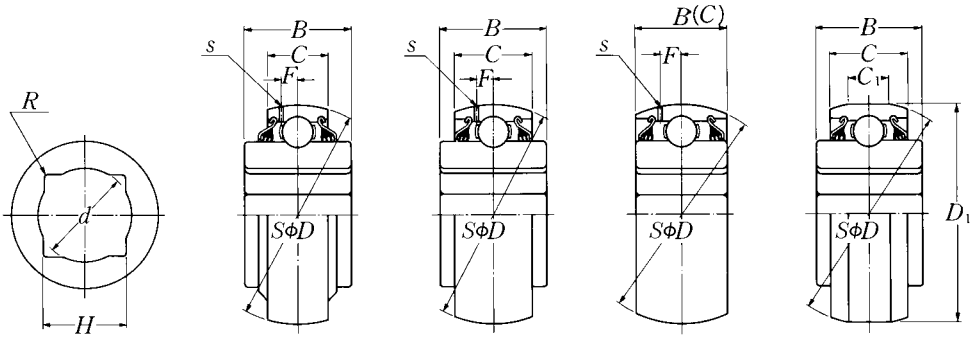

Type 1 Type 2 Type 3 Type 4

Shaft size inch	Bearing [1] number	Type	Nominal dimensions mm / inch H	d max.	R [2] max.	D	C	B
1 1/8	4AS08-1. 1/8	4	29.972 ± 0.127	31.4	2.25	87.338 0 − 0.025	30.2 0 − 0.12	36.5 0 − 0.12
			1.1800 ± 0.0050	1.236	0.089	3.4385 0 − 0.0010	1.1890 0 − 0.0047	1.4370 0 − 0.0047
1 5/32	1AS08-1. 5/32D1	1	30 ± 0.127	31.8	2.25	80 0 − 0.013	21 0 − 0.12	36.5 0 − 0.12
			1.1811 ± 0.0050	1.252	0.089	3.1496 0 − 0.0005	0.8268 0 − 0.0047	1.4370 0 − 0.0047
1 1/4	2AS09-1. 1/4D1	2	32.766 ± 0.127	34.8	2.25	85 0 − 0.015	30.2 0 − 0.120	36.5 0 − 0.12
			1.2900 ± 0.0050	1.370	0.089	3.3465 0 − 0.0006	1.1890 0 − 0.0047	1.4370 0 − 0.0047
1 1/4	4AS09-1. 1/4	4	32.766 ± 0.127	34.8	2.25	87.338 0 − 0.025	30.2 0 − 0.12	36.5 0 − 0.12
			1.2900 ± 0.0050	1.370	0.089	3.4385 0 − 0.0010	1.1890 0 − 0.0047	1.4370 0 − 0.0047
1 1/8	2AS10-1. 1/8D1	2	29.972 ± 0.127	31.4	2.25	90 0 − 0.015	30.2 0 − 0.12	36.5 0 − 0.12
			1.1800 ± 0.0050	1.236	0.089	3.5433 0 − 0.0006	1.1890 0 − 0.0047	1.4370 0 − 0.0047
1 1/8	3AS10-1. 1/8D1	3	29.972 ± 0.127	31.4	2.25	90 0 − 0.015	30.2 0 − 0.12	30.2 0 − 0.12
			1.1800 ± 0.0050	1.236	0.089	3.5433 0 − 0.0006	1.1890 0 − 0.0047	1.1890 0 − 0.0047
1 1/2	1AS11-1. 1/2D1	1	38.89 ± 0.127	41.2	2.25	100 0 − 0.015	25 0 − 0.15	44.45 0 − 0.15
			1.5311 ± 0.0050	1.622	0.089	3.9370 0 − 0.0006	0.9843 0 − 0.0059	1.7500 0 − 0.0059

Remarks: 1) Bearings suffixed with D1 have oil holes on the outer ring.
2) R min.: 0.059 inch except 3AS14-2D1 R min.: 0.126 inch.

Nominal dimensions					Basic load ratings		Factor	Mass	
mm / inch					N / lbf			kg	lb
D_1		C_1	s	F	dynamic C_r	static C_{or}	f_0		
85.750	0 / −0.025	16.6	—	—	29 100	17 800	14.0	0.90	
3.3760	0 / −0.0010	0.6535	—	—	6 550	4 000		1.99	
	—	—	2.2	6.6	29 100	17 800	14.0	0.64	
	—	—	0.087	0.260	6 550	4 000		1.41	
	—	—	2.2	6.7	32 500	20 400	14.1	0.77	
	—	—	0.087	0.264	7 350	4 600		1.70	
85.750	0 / −0.025	16.6	—	—	32 500	20 400	14.1	0.82	
3.3760	0 / −0.0010	0.6535	—	—	7 350	4 600		1.81	
	—	—	2.2	6.7	35 000	23 200	14.4	0.98	
	—	—	0.087	0.264	7 900	5 200		2.16	
	—	—	2.2	6.7	35 000	23 200	14.4	0.88	
	—	—	0.087	0.264	7 900	5 200		1.94	
	—	—	2.5	7.6	43 500	29 200	14.3	1.19	
	—	—	0.098	0.299	9 750	6 550		2.63	

Ball bearing, square bore, spherical O.D.

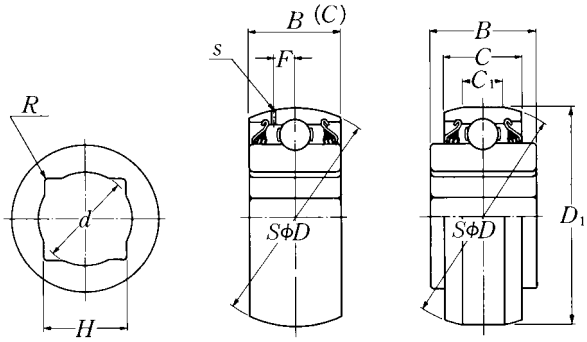

Type 3 Type 4

Shaft size inch	Bearing [1] number	Type	Nominal dimensions mm / inch H		d max.	R [2] max.	D		C		B	
1½	3AS11-1.½D1	3	38.89	± 0.127	41.2	2.25	100	0 / − 0.015	33.3	0 / − 0.15	33.3	0 / − 0.15
			1.5311	± 0.0050	1.622	0.089	3.9370	0 / − 0.0006	1.3110	0 / − 0.0059	1.3110	0 / − 0.0059
1½	4AS11-1.½	4	38.89	± 0.127	41.2	2.25	104.725	0 / − 0.025	36.5	0 / − 0.15	44.45	0 / − 0.15
			1.5311	± 0.0050	1.622	0.089	4.1230	0 / − 0.0010	1.4370	0 / − 0.0059	1.7500	0 / − 0.0059
2	3AS14-2D1	3	52.2	± 0.127	54.9	4.0	125	0 / − 0.020	39.69	0 / − 0.15	39.69	0 / − 0.15
			2.0551	± 0.0050	2.161	0.157	4.9213	0 / − 0.0008	1.5626	0 / − 0.0059	1.5626	0 / − 0.0059

Remarks: 1) Bearings suffixed with D1 have oil holes on the outer ring.
2) R min.: 0.059 inch except 3AS14-2D1 R min.: 0.126 inch.

Nominal dimensions					Basic load ratings		Factor	Mass	
mm / inch	D_1	C_1	s	F	N / lbf dynamic C_r	static C_{or}	f_0	kg	lb
	—	—	2.5	7.6	43 500	29 200	14.3	1.10	
	—	—	0.098	0.299	9 750	6 550			2.43
	103.556 $^{0}_{-0.025}$	15.9	—	—	43 500	29 200	14.3	1.48	
	4.0770 $^{0}_{-0.0010}$	0.6142	—	—	9 750	6 550			3.26
	—	0.6260	3.0	9.4	62 000	44 000	14.5	1.90	
	—	—	0.118	0.370	14 000	9 900			4.19

Ball bearing, square bore, cylindrical O.D.

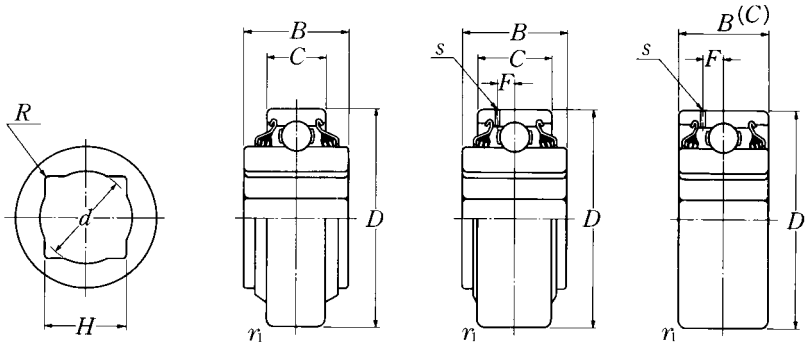

Type 5 Type 6 Type 7

Shaft dia. inch	Bearing [1] number	Type	Nominal dimensions mm / inch H	d max.	R [2] max.	D		C		B	
1	5AS08-1	5	26.162 ± 0.127	27.8	2.25	80	0 / − 0.013	18	0 / − 0.12	36.5	0 / − 0.12
			1.0300 ± 0.0050	1.095	0.089	3.1496	0 / − 0.0005	0.7087	0 / − 0.0047	1.4370	0 / − 0.0047
1	6AS08-1D1	6	26.162 ± 0.127	27.8	2.25	80	0 / − 0.013	30.2	0 / − 0.12	36.5	0 / − 0.12
			1.0300 ± 0.0050	1.095	0.089	3.1496	0 / − 0.0005	1.1890	0 / − 0.0047	1.4370	0 / − 0.0047
1⅛	5AS08-1.⅛	5	29.972 ± 0.127	31.4	2.25	80	0 / − 0.013	18	0 / − 0.12	36.5	0 / − 0.12
			1.1800 ± 0.0050	1.236	0.089	3.1496	0 / − 0.0005	0.7087	0 / − 0.0047	1.4370	0 / − 0.0047
1⅛	6AS08-1.⅛D1	6	29.972 ± 0.127	31.4	2.25	80	0 / − 0.013	30.2	0 / − 0.12	36.5	0 / − 0.12
			1.1800 ± 0.0050	1.236	0.089	3.1496	0 / − 0.0005	1.1890	0 / − 0.0047	1.4370	0 / − 0.0047
1⅛	7AS10-1.⅛D1	7	29.972 ± 0.127	31.4	2.25	90	0 / − 0.015	30.2	0 / − 0.12	30.2	0 / − 0.12
			1.1800 ± 0.0050	1.236	0.089	3.5433	0 / − 0.0006	1.1890	0 / − 0.0047	1.1890	0 / − 0.0047
1½	7AS11-1.½D1	7	38.89 ± 0.127	41.2	2.25	100	0 / − 0.015	33.3	0 / − 0.15	33.3	0 / − 0.15
			1.5311 ± 0.0050	1.622	0.089	3.9370	0 / − 0.0006	1.3110	0 / − 0.0059	1.3110	0 / − 0.0059

Remarks: 1) Bearings suffixed with D1 have oil holes on the outer ring.
2) R min.: 0.059 inch.

Nominal dimensions			Basic load ratings		Factor	Mass	
mm		inch	N	lbf		kg	lb
r_{1s} min.	s	F	dynamic C_r	static C_{or}	f_0		
0.6	—	—	29 100	17 800	14.0	0.66	
0.024	—	—	6 550	4 000		1.46	
1.5	2.2	6.6	29 100	17 800	14.0	0.78	
0.059	0.087	0.260	6 550	4 000		1.72	
0.6	—	—	29 100	17 800	14.0	0.61	
0.024	—	—	6 550	4 000		1.35	
1.5	2.2	6.6	29 100	17 800	14.0	0.73	
0.059	0.087	0.260	6 550	4 000		1.61	
1.5	2.2	6.7	35 000	23 200	14.4	0.90	
0.059	0.087	0.264	7 900	5 200		1.99	
2	2.5	7.6	43 500	29 200	14.3	1.12	
0.079	0.098	0.299	9 750	6 550		2.47	

Ball bearing, round bore, spherical O.D.

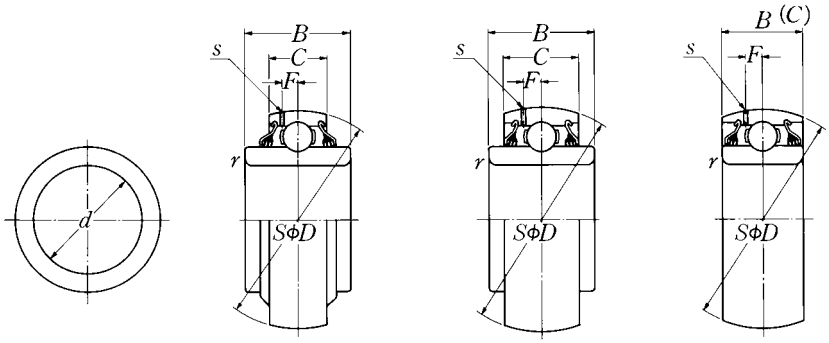

Type 1 Type 2 Type 3

Shaft dia. inch	Bearing [1] number	Type	Nominal dimensions d		D		C		B	
			mm		mm		mm		mm	
1 3/16	1AC08-1. 3/16	1	30.175	0 / −0.013	80	0 / −0.013	18	0 / −0.12	30.2	0 / −0.12
			1.1880	0 / −0.0005	3.1496	0 / −0.0005	0.7087	0 / −0.0047	1.1890	0 / −0.0047
1.7717	3AC09D1	3	45	0 / −0.013	85	0 / −0.015	30.2	0 / −0.12	30.2	0 / −0.12
			1.7717	0 / −0.0005	3.3465	0 / −0.0006	1.1890	0 / −0.0047	1.1890	0 / −0.0047
1 1/2	3AC09-1. 1/2D1	3	38.989	0 / −0.254	85	0 / −0.015	30.2	0 / −0.12	30.2	0 / −0.12
			1.5350	0 / −0.0100	3.3465	0 / −0.0006	1.1890	0 / −0.0047	1.1890	0 / −0.0047
1 3/4	3AC10-1. 3/4D1	3	45.339	0 / −0.254	90	0 / −0.015	30.2	0 / −0.12	30.2	0 / −0.12
			1.7850	0 / −0.0100	3.5433	0 / −0.0006	1.1890	0 / −0.0047	1.1890	0 / −0.0047
1 15/16	3AC10-1. 15/16D1	3	49.225	0 / −0.013	90	0 / −0.015	30.2	0 / −0.12	30.2	0 / −0.12
			1.9380	0 / −0.0005	3.5433	0 / −0.0006	1.1890	0 / −0.0047	1.1890	0 / −0.0047
2 3/16	3AC11-2. 3/16D1	3	55.575	0 / −0.015	100	0 / −0.015	33.3	0 / −0.15	33.3	0 / −0.15
			2.1880	0 / −0.0006	3.9370	0 / −0.0006	1.3110	0 / −0.0059	1.3110	0 / −0.0059

Remarks: 1) Bearings suffixed with D1 have oil holes on the outer ring.

Nominal dimensions			Basic load ratings		Factor	Mass	
mm		inch	N	lbf		kg	lb
r_s min.	s	F	dynamic C_r	static C_{or}	f_0		
1.5	—	—	29 100	17 800	14.0	0.61	
0.059	—	—	6 550	4 000		1.35	
1.5	2.2	6.7	32 500	20 400	14.1	0.59	
0.059	0.087	0.264	7 350	4 600		1.30	
1.5	2.2	6.7	32 500	20 400	14.1	0.68	
0.059	0.087	0.264	7 350	4 600		1.50	
1.5	2.2	6.7	35 000	23 200	14.4	0.70	
0.059	0.087	0.264	7 900	5 200		1.54	
1.5	2.2	6.7	35 000	23 200	14.4	0.65	
0.059	0.087	0.264	7 900	5 200		1.43	
2	2.5	7.6	43 500	29 200	14.3	0.87	
0.079	0.098	0.299	9 750	6 550		1.92	

Ball bearing, round bore, spherical O.D.

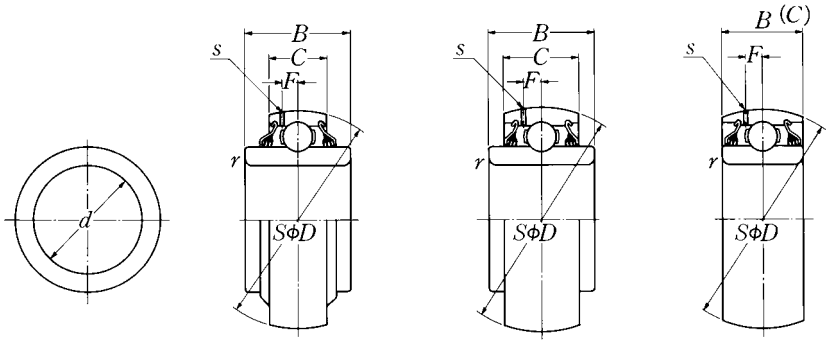

Type 1 Type 2 Type 3

Shaft dia. inch	Bearing [1] number	Type	Nominal dimensions mm / inch d	D	C	B
2.7559	3AC14D1	3	70 $^{0}_{-0.015}$	125 $^{0}_{-0.020}$	39.69 $^{0}_{-0.15}$	39.69 $^{0}_{-0.15}$
			2.7559 $^{0}_{-0.0006}$	4.9213 $^{0}_{-0.0008}$	1.5626 $^{0}_{-0.0059}$	1.5626 $^{0}_{-0.0059}$
$1\frac{15}{16}$	3AC14-1.$\frac{15}{16}$D1	3	49.225 $^{0}_{-0.015}$	125 $^{0}_{-0.020}$	39.69 $^{0}_{-0.15}$	39.69 $^{0}_{-0.15}$
			1.9380 $^{0}_{-0.0006}$	4.9213 $^{0}_{-0.0008}$	1.5626 $^{0}_{-0.0059}$	1.5626 $^{0}_{-0.0059}$

Remarks: 1) Bearings suffixed with D1 have oil holes on the outer ring.

Nominal dimensions			Basic load ratings		Factor	Mass	
mm		inch	N	lbf		kg	lb
r_s min.	s	F	dynamic C_r	static C_{or}	f_0		
2	3.0	9.4	62 000	44 000	14.5	1.56	
0.079	0.118	0.370	14 000	9 900		3.44	
2	3.0	9.4	62 000	4 4000	14.5	2.20	
0.079	0.118	0.370	14 000	9 900		4.85	

Ball bearing, round bore, cylindrical O.D.

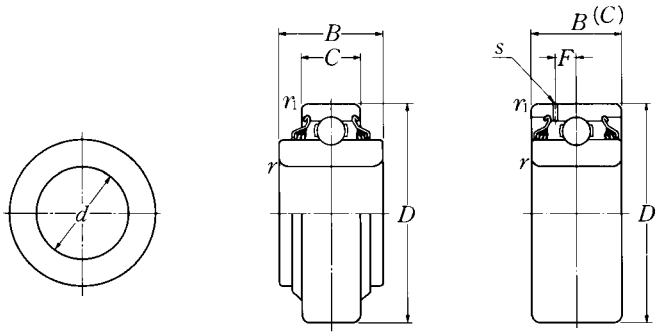

Type 5 Type 7

Shaft dia. inch	Bearing [1] number	Type	Nominal dimensions d		D		C		B	
			mm		mm		mm		mm	
1.1811	5AC06	5	30	0 / −0.010	62	0 / −0.013	16	0 / −0.12	25.4	0 / −0.12
			1.1811	0 / −0.0004	2.4409	0 / −0.0005	0.6299	0 / −0.0047	1.0000	0 / −0.0047
1 15/16	5AC10-1. 15/16	5	49.225	0 / −0.013	90	0 / −0.015	20	0 / −0.12	49.2	0 / −0.12
			1.9380	0 / −0.0005	3.5433	0 / −0.0006	0.7874	0 / −0.0047	1.9370	0 / −0.0047
1 13/32	7AC10-1. 13/32D1	7	35.725	0 / −0.013	90	0 / −0.015	30.2	0 / −0.12	30.2	0 / −0.12
			1.4065	0 / −0.0005	3.5433	0 / −0.0006	1.1890	0 / −0.0047	1.1890	0 / −0.0047
1 15/16	7AC10-1. 15/16D1	7	49.225	0 / −0.013	90	0 / −0.015	30.2	0 / −0.12	30.2	0 / −0.12
			1.9380	0 / −0.0005	3.5433	0 / −0.0006	1.1890	0 / −0.0047	1.1890	0 / −0.0047
2 3/16	7AC11-2. 3/16D1	7	55.575	0 / −0.015	100	0 / −0.015	33.3	0 / −0.15	33.3	0 / −0.15
			2.1880	0 / −0.0006	3.9370	0 / −0.0006	1.3110	0 / −0.0059	1.3110	0 / −0.0059

Remarks: 1) Bearings suffixed with D1 have oil holes on the outer ring.

Nominal dimensions				Basic load ratings		Factor	Mass	
mm		inch		N	lbf		kg	lb
r_s min.	r_{1s} min.	s	F	dynamic C_r	static C_{or}	f_0		
1	0.6	—	—	19 500	11 300	13.8	0.21	
0.039	0.024	—	—	4 400	2 540		0.46	
1.5	1.5	—	—	35 000	23 200	14.4	0.74	
0.059	0.059	—	—	7 900	5 200		1.63	
1.5	1.5	2.2	6.7	35 000	23 200	14.4	0.88	
0.059	0.059	0.087	0.264	7 900	5 200		1.94	
1.5	1.5	2.2	6.7	35 000	23 200	14.4	0.68	
0.059	0.059	0.087	0.264	7 900	5 200		1.50	
2	2	2.5	7.6	43 500	29 200	14.3	0.91	
0.079	0.079	0.098	0.299	9 750	6 550		2.01	

Ball bearing, hex-bore

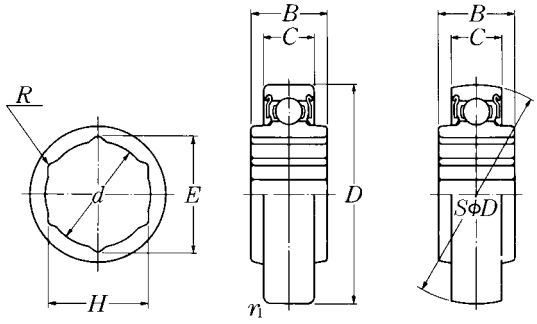

Type 1 Type 2

Shaft size inch	Bearing [1] number	Type	Nominal dimensions mm / inch H		d max.	R max.	E min.		D		C	
9/16	1AH03-9/16	1	14.3	+0.127 0	14.7	0.25	16.435	40	0 −0.011	12	0 −0.12
			0.5630	+0.0050 0	0.579	0.010	0.6470	1.5748	0 −0.0004	0.4724	0 −0.0047
11/16	1AH04-11/16	1	17.653	+0.127 0	18.1	0.25	20.307	47	0 −0.011	14	0 −0.12
			0.6950	+0.0050 0	0.713	0.010	0.7995	1.8504	0 −0.0004	0.5512	0 −0.0047
7/8	1AH05-7/8	1	22.250	+0.127 0	22.8	0.25	25.615	52	0 −0.013	15	0 −0.12
			0.8760	+0.0050 0	0.898	0.010	1.0085	2.0472	0 −0.0005	0.5906	0 −0.0047
1	1AH06-1	1	25.425	+0.127 0	26.1	0.25	29.281	62	0 −0.013	16	0 −0.12
			1.0010	+0.0050 0	1.028	0.010	1.1528	2.4409	0 −0.0005	0.6299	0 −0.0047
7/8	2AH05-7/8	2	22.25	+0.127 0	22.8	0.25	25.615	52	0 −0.013	15	0 −0.12
			0.8760	+0.0050 0	0.898	0.010	1.0085	2.0472	0 −0.0005	0.5906	0 −0.0047
1	2AH06-1	2	25.425	+0.127 0	26.1	0.25	29.281	62	0 −0.013	16	0 −0.12
			1.0010	+0.0050 0	1.028	0.010	1.1528	2.4409	0 −0.0005	0.6299	0 −0.0047
1 1/8	2AH07-1. 1/8	2	28.6	+0.127 0	29.3	0.25	32.947	72	0 −0.013	17	0 −0.12
			1.1260	+0.0050 0	1.154	0.010	1.2971	2.8346	0 −0.0005	0.6693	0 −0.0047

Remarks: 1) Bearings suffixed with D1 have oil holes on the outer ring.

Nominal dimensions			Basic load ratings		Factor	Mass	
mm	inch		N	lbf		kg	lb
B		r_{1s} min.	dynamic C_r	static C_{or}	f_0		
20.3	$^{0}_{-0.12}$	0.6	9 600	4 600	12.8	0.08	
0.7992	$^{0}_{-0.0047}$	0.024	2 160	1 030		0.18	
21	$^{0}_{-0.12}$	0.6	12 800	6 650	13.2	0.13	
0.8268	$^{0}_{-0.0047}$	0.024	2 890	1 500		0.29	
25.4	$^{0}_{-0.12}$	0.6	14 000	7 850	13.9	0.16	
1.0000	$^{0}_{-0.0047}$	0.024	3 150	1 770		0.35	
24	$^{0}_{-0.12}$	0.6	19 500	11 300	13.8	0.24	
0.9449	$^{0}_{-0.0047}$	0.024	4 400	2 540		0.53	
25.4	$^{0}_{-0.12}$	—	14 000	7 850	13.9	0.16	
1.0000	$^{0}_{-0.0047}$	—	3 150	1 770		0.35	
24	$^{0}_{-0.12}$	—	19 500	11 300	13.8	0.24	
0.9449	$^{0}_{-0.0047}$	—	4 400	2 540		0.53	
37.7	$^{0}_{-0.12}$	—	25 700	15 300	13.8	0.45	
1.4843	$^{0}_{-0.0047}$	—	5 750	3 450		0.99	

Ball bearing, hex-bore

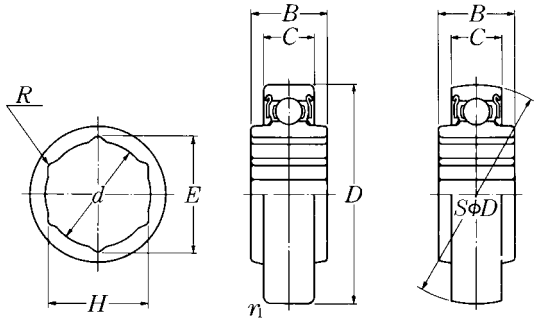

Type 1 Type 2

Shaft size inch	Bearing [1] number	Type	Nominal dimensions mm / inch									
			H		d max.	R max.	E min.		D		C	
1½	2AH09-1.½	2	38.125	+0.127 0	39	0.25	43.946	85	0 −0.015	19	0 −0.12
			1.5010	+0.0050 0	1.535	0.010	1.7302	3.3465	0 −0.0006	0.7480	0 −0.0047

Remarks: 1) Bearings suffixed with D1 have oil holes on the outer ring.

Nominal dimensions			Basic load ratings		Factor	Mass	
mm	inch		N	lbf		kg	lb
B		r_{1s} min.	dynamic C_r	static C_{or}	f_0		
30	$^{0}_{-0.12}$	—	32 500	20 400	14.1	0.54	
1.1811	$^{0}_{-0.0047}$	—	7 350	4 600		1.19	